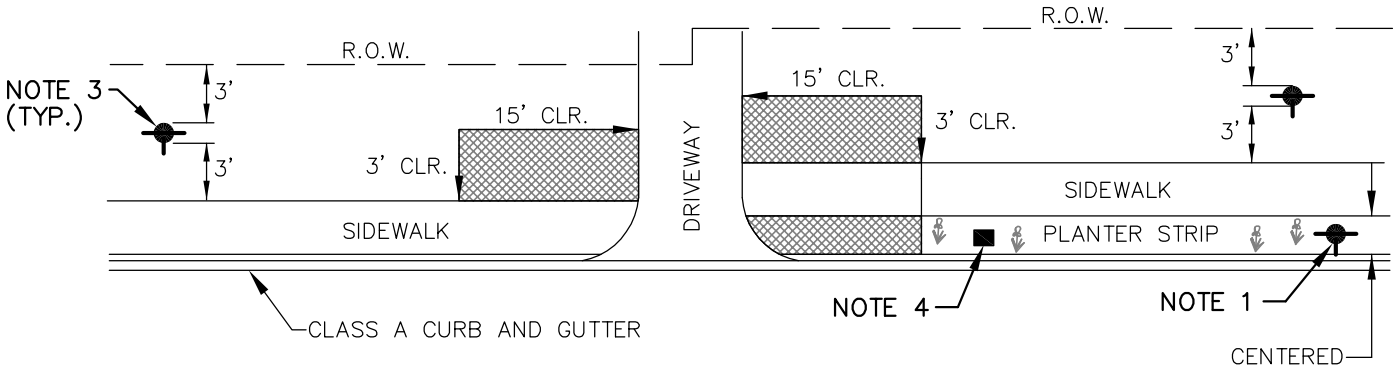


WITH VERTICAL CURB

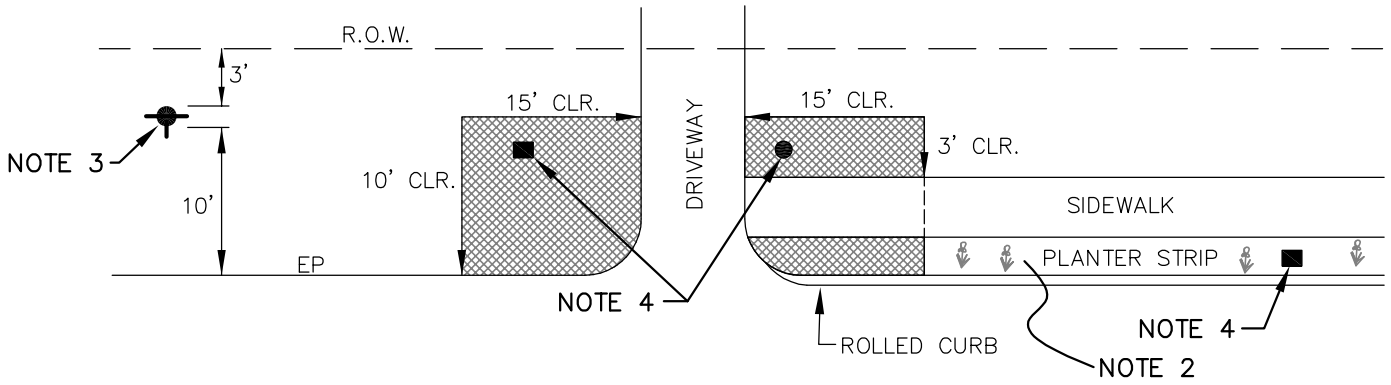


WITHOUT VERTICAL CURB

CLEAR ZONE, NO ABOVE GROUND APPURTENANCES.

NOTES:

1. CBD ONLY OR WHEN PLANTER STRIP WIDTH IS 6FT OR GREATER.
2. NO ABOVE GROUND APPURTENANCES IN THE PLANTER STRIP BEHIND ROLLED CURBS.
3. HYDRANTS TO BE LOCATED 3FT. FROM THE EDGE OF RIGHT OF WAY.
4. BELOW GROUND FACILITIES IN CLEARANCE ZONES, SIDEWALKS AND PLANTER STRIPS MUST BE RATED FOR TRAFFIC LOADING.
5. ALL DIMENSIONS SHOWN ARE MINIMUM.

City of Bellevue

WATER UTILITY

TITLE

ROADWAY CLEARANCES
FOR ABOVE GROUND APPURTENANCES

JANUARY 2013

NO SCALE

NO. W-54