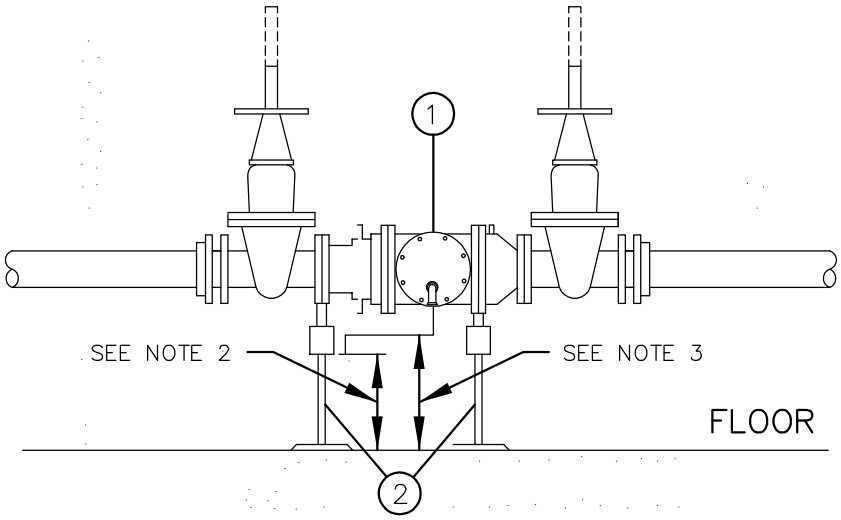


1. LINE-SIZED WA STATE APPROVED REDUCED PRESSURE BACKFLOW ASSEMBLY, COMPLETE WITH (2) RESILIENT SEATED O.S.&Y. GATE VALVES AND (4) RESILIENT SEATED TEST COCKS.

2. TWO ADJUSTABLE PIPE STANCHIONS, BOLTED TO FLOOR. REQUIRED FOR ASSEMBLIES 2 1/2" AND LARGER.

NOTES:

1. WHEN THE REDUCED PRESSURE ASSEMBLY IS LOCATED INSIDE A BUILDING A SIZED DRAIN LINE SHALL BE PROVIDED FOR RELIEF PORT. THERE MUST BE AN APPROVED AIR GAP BETWEEN THE RELIEF PORT AND DRAIN.
2. ALLOW 12"+ NOMINAL DIAMETER OF ASSEMBLY CLEARANCE BELOW RELIEF PORT FOR REPAIR. MAXIMUM CLEARANCE OF 5'.
3. ASSEMBLY TO BE MAINTAINED BY OWNER AND ANNUAL CERTIFICATION REQUIRED.
4. SIDE CLEARANCES TO WALL;
   VALVE SIZE 2" AND LESS: 6" CLEARANCE.
   VALVE SIZE 3" AND ABOVE: 12" CLEARANCE.
5. TESTING IS REQUIRED BY A WASHINGTON STATE DEPARTMENT OF HEALTH CERTIFIED BACKFLOW ASSEMBLY TESTER UPON INSTALLATION AND ANNUALLY THEREAFTER. ASSEMBLY TO BE MAINTAINED BY OWNER.
6. PROTECT AGAINST FREEZING OR DAMAGE. USE HEAT-TAPE IF AREA IS SUBJECT TO FREEZING.
7. INTERIOR WATER APPURTENANCES MUST CONFORM TO UNIFORM PLUMBING CODE REQUIREMENTS.
8. DEVICE TO BE INSTALLED NO HIGHER THAN 5 FEET ABOVE FLOOR.
9. RPBA INSTALLATIONS THAT DIFFER FROM THE STANDARD DETAIL MUST BE APPROVED BY THE CROSS CONNECTION PROGRAM ADMINISTRATOR (425-452-5208) AND WILL BE REVIEWED ON A CASE-BY-CASE BASIS TO ENSURE THEY MEET CURRENT MINIMUM REQUIREMENTS FOR INSTALLATION AND FREEZE PROTECTION.

City of Bellevue

WATER UTILITY

TITLE

REDUCED PRESSURE BACKFLOW ASSEMBLY (INSIDE INSTALLATION)

JANUARY 2013

NO SCALE

NO. W-48