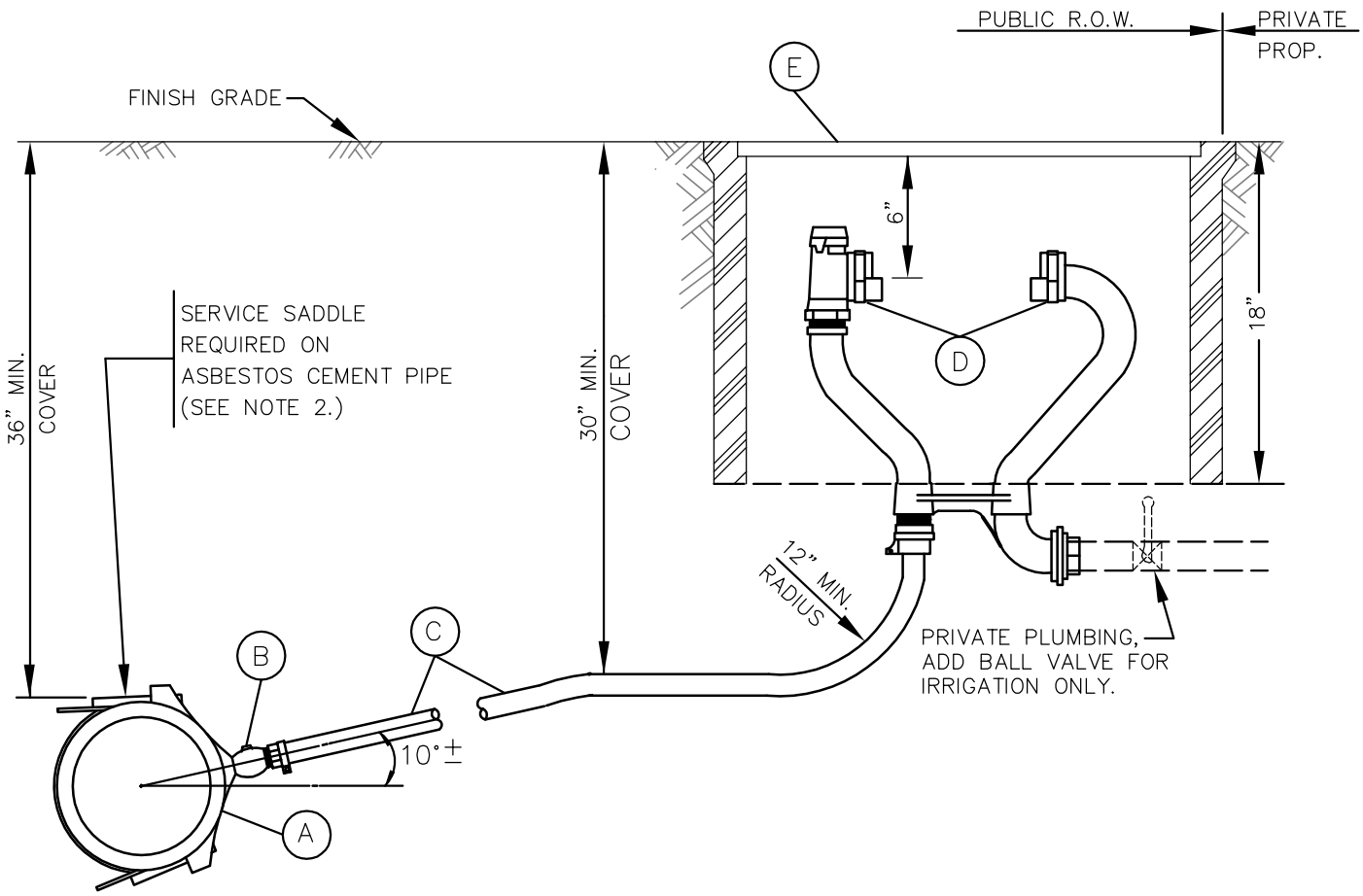

VERTICAL METER SETTER INSTALLATION

(A) EPOXY OR NYLON COATED HIGH TENSILE D.I. SERVICE SADDLE W/ STAINLESS STEEL STRAP AND EPOXY COATED BOSS, 1" AWWA TAPER (CC) TAP, FORD FC101 OR EQUAL, SIZE AS REQUIRED.

(B) BALL CORPORATION STOP, 1" AWWA TAPER (CC) INLET BY 1" PACK JOINT (COMPRESSION FITTING) FOR COPPER OUTLET, FORD FB1000-4, MUELLER NO. P-15028, OR EQUAL.

(C) 1" COPPER TUBING, TYPE K.

(D) 1" METER SETTER WITH ANGLE STOP, 1" PACK JOINT (COMPRESSION FITTING) FOR COPPER INLET BY DOUBLE (DUAL) PURPOSE COUPLING OUTLET, ANGLE METER VALVE (ANGLE STOP) WITH PADLOCK WINGS, VERTICAL INLET BY HORIZONTAL OUTLET, FORD V74-84 x 12W, A.Y. MCDONALD 39-412WX2D44 (WITH INLET COUPLING M.I.P.T. BY PACK JOINT, 4753-22), OR EQUAL.

(E) METER BOX, EQUAL TO:
CARSON INDUSTRIES 1527-18 BCFXL METER BOX WITH 1527 COVER WITH MAX VIEW READER DOOR IN NON-TRAVELED AREAS. OLYMPIC FOUNDRY SM30 IN SIDEWALK AND IN AREAS WITH VEHICULAR TRAFFIC.

NOTES:

1. SERVICE LINE SHALL BE PERPENDICULAR TO THE WATERMAIN, UNLESS OTHERWISE APPROVED BY THE ENGINEER.
2. SERVICE SADDLE INSTALLED AT CONTRACTOR'S OPTION ON CLASS 52 OR THICKER D.I. PIPE, THE CORP. STOP MAY BE TAPPED DIRECTLY INTO THE PIPE.
3. APPROVED BACKFLOW PREVENTION MUST BE INSTALLED WITH IRRIGATION SERVICE PER D.O.H. REQUIREMENTS. IRRIGATION SYSTEM SHALL NOT BE PUT INTO SERVICE UNTIL THE BACKFLOW PREVENTION DEVICE IS APPROVED BY A CITY OF BELLEVUE WATER QUALITY TECHNICIAN.
4. METER WILL BE SUPPLIED AND INSTALLED BY THE CITY OF BELLEVUE.

JANUARY 2013 NO SCALE

City of Bellevue

WATER UTILITY

TITLE

1" x 1"
SINGLE WATER SERVICE OR
DOMESTIC IRRIGATION SERVICE
(VERTICAL METER SETTER) NO. W-24