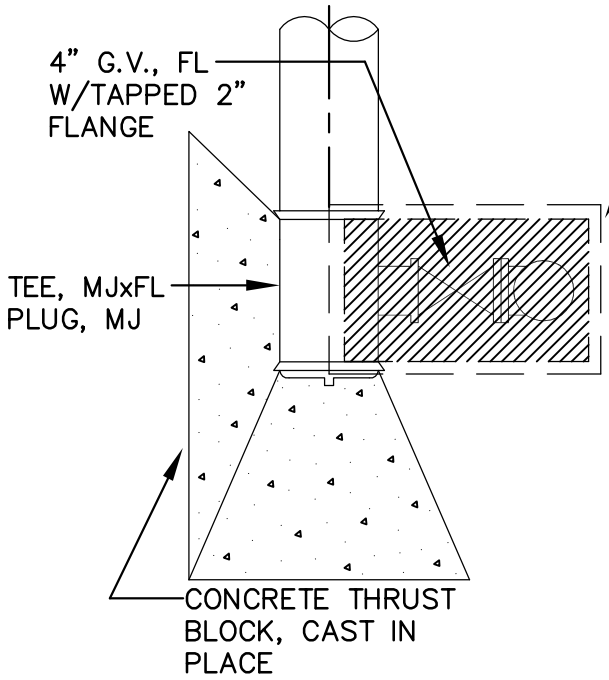

(PLAN)
TOP VIEW

METER BOX

IN PAVED AREAS

CUL-DE-SAC (DEAD-END):	OLYMPIC FOUNDRY SM-30
THRU-STREET SHOULDER:	OLYMPIC FOUNDRY SM-30
TRAVELED STREET LANE:	24" DIAMETER CAST IRON MANHOLE COVER FOR 24" OPENING FRAME TO READ "WATER", WITH RAISED NON-SKID PATTERN RATED FOR H-20 LOAD. FRAME SHALL BE 6" DEEP, SET WITH FLANGE-SIDE DOWN ON 24" DIAMETER CONCRETE DONUTS (TOTAL DEPTH OF DONUTS = 12").

OUTSIDE PAVED AREAS
(NOT SUBJECT TO TRAFFIC LOAD)

CARSON INDUSTRIES
1730-18 BCFXL WITH 1730 COVER.

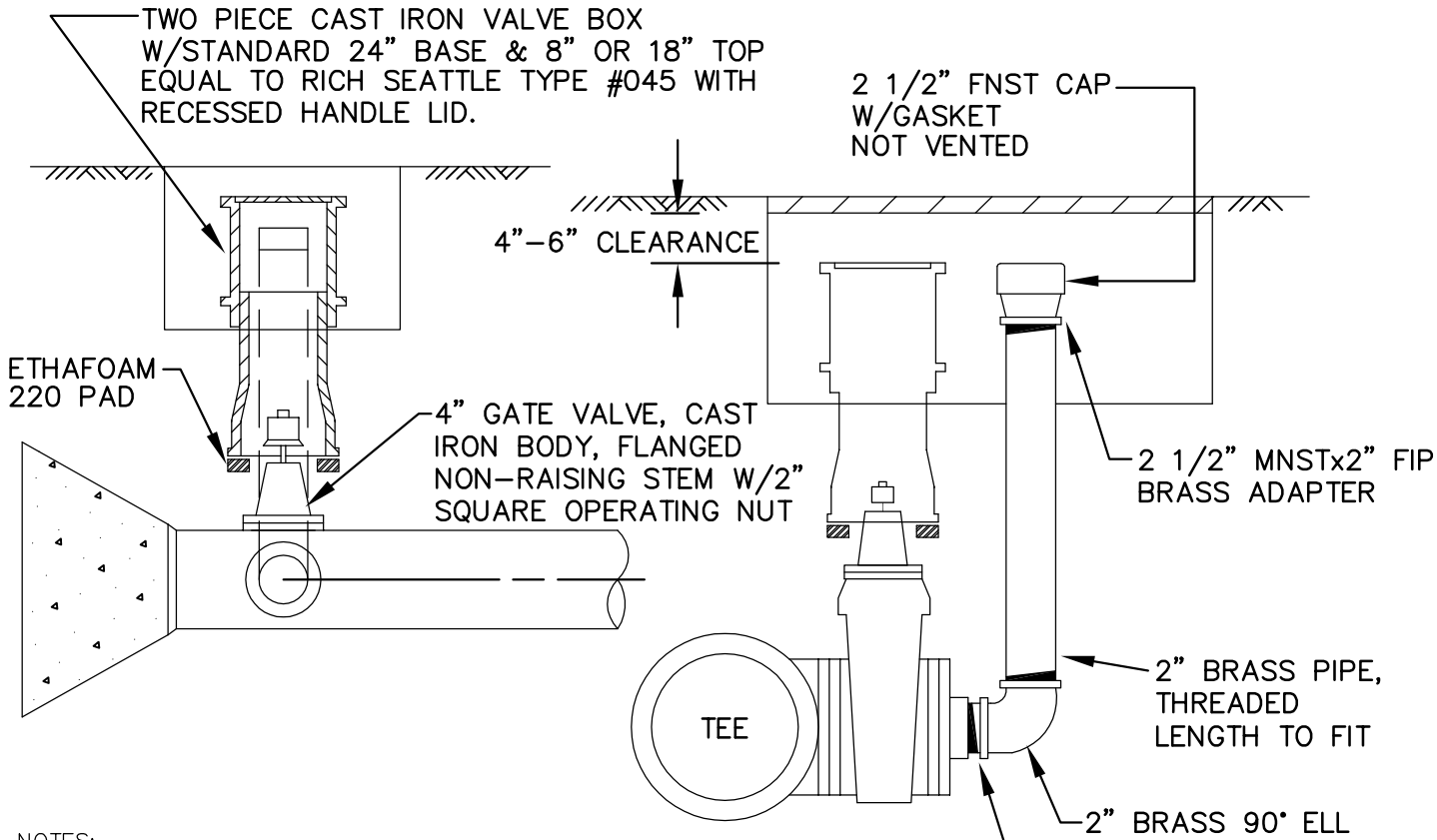

SIDE VIEW
(PROFILE)

NOTES:

1. ALL PIPE SHALL BE BRASS BEYOND GATE VALVE.
2. ALL ASSEMBLIES SHALL BE LOCATED IN STREET UNLESS OTHERWISE NOTED.
3. WHEN INSTALLED OUTSIDE PAVED AREAS, INSTALL VALVE MARKER POST PER STANDARD DETAIL NO. W-14 AND FIELD LOCATE ADJACENT TO METER BOX PAINTED WITH TWO COATS OF RUSTOLEUM HIGH GLOSS WHITE PAINT.

City of Bellevue

WATER UTILITY

TITLE

2" BLOW-OFF ASSEMBLY

JANUARY 2013

NO SCALE

NO. W-15