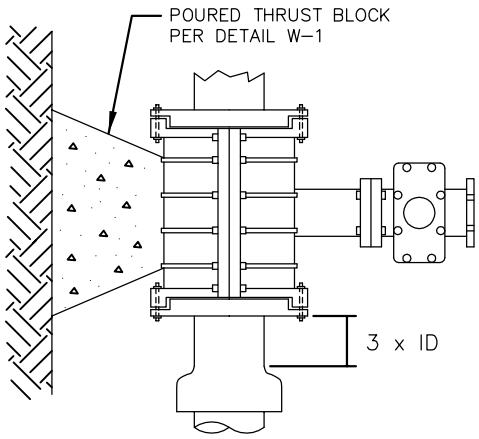

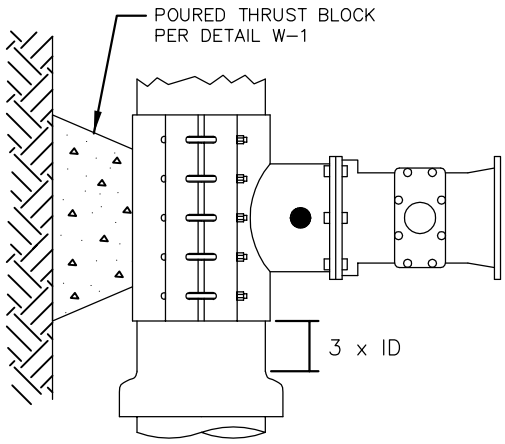

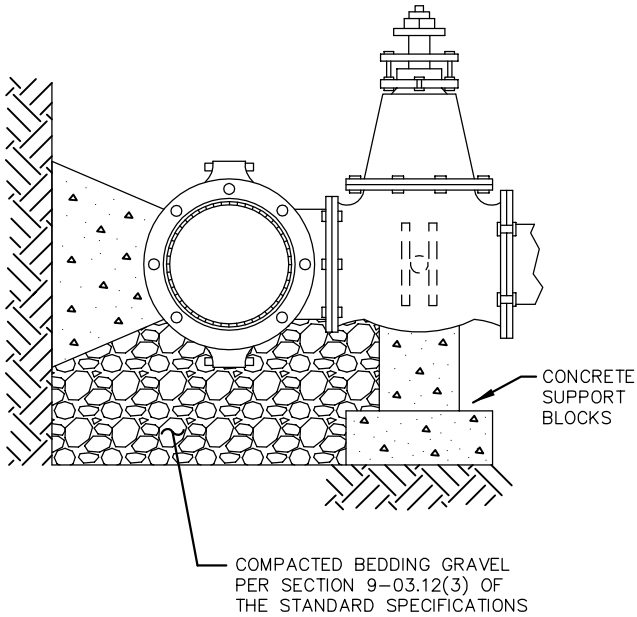

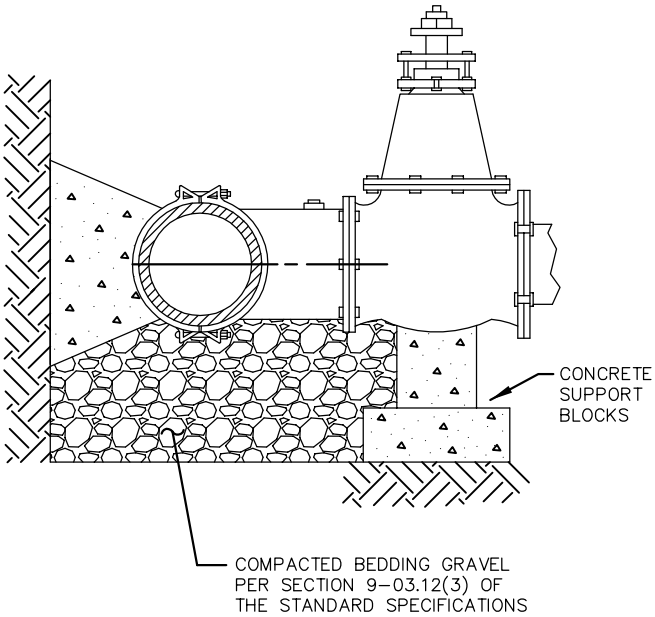

DUTILE IRON TAPPING TEE MECHANICAL JOINT SLEEVE

INSTALLED ON ASBESTOS CEMENT PIPE, CAST IRON PIPE AND DUCTILE IRON PIPE.

STAINLESS STEEL OR STEEL TAPPING TEE

STAINLESS STEEL TAPPING TEE

INSTALLED ON ASBESTOS CEMENT PIPE, CAST IRON PIPE AND DUCTILE IRON PIPE.

STEEL TAPPING TEE

INSTALLED ON DUCTILE IRON PIPE ONLY.

NOTES:

1. STAINLESS STEEL TAPPING TEES SHALL HAVE FULL CIRCLE SEAL. BOLTS AND NUTS SHALL BE STAINLESS STEEL.
2. STEEL TAPPING TEES SHALL BE EPOXY COATED. BOLTS AND NUTS SHALL BE COR-TEN, OR STAINLESS STEEL.
3. ALL TEES AND VALVES TO BE WATER TESTED BEFORE TAP.
4. TAPPING TEE MAY BE SIZE ON SIZE. TAP SHALL BE AT LEAST 2" SMALLER DIAMETER THAN THE EXISTING MAIN.

City of Bellevue

WATER UTILITY

TITLE

TAPPING TEES

JANUARY 2013

NO SCALE

NO. W-10