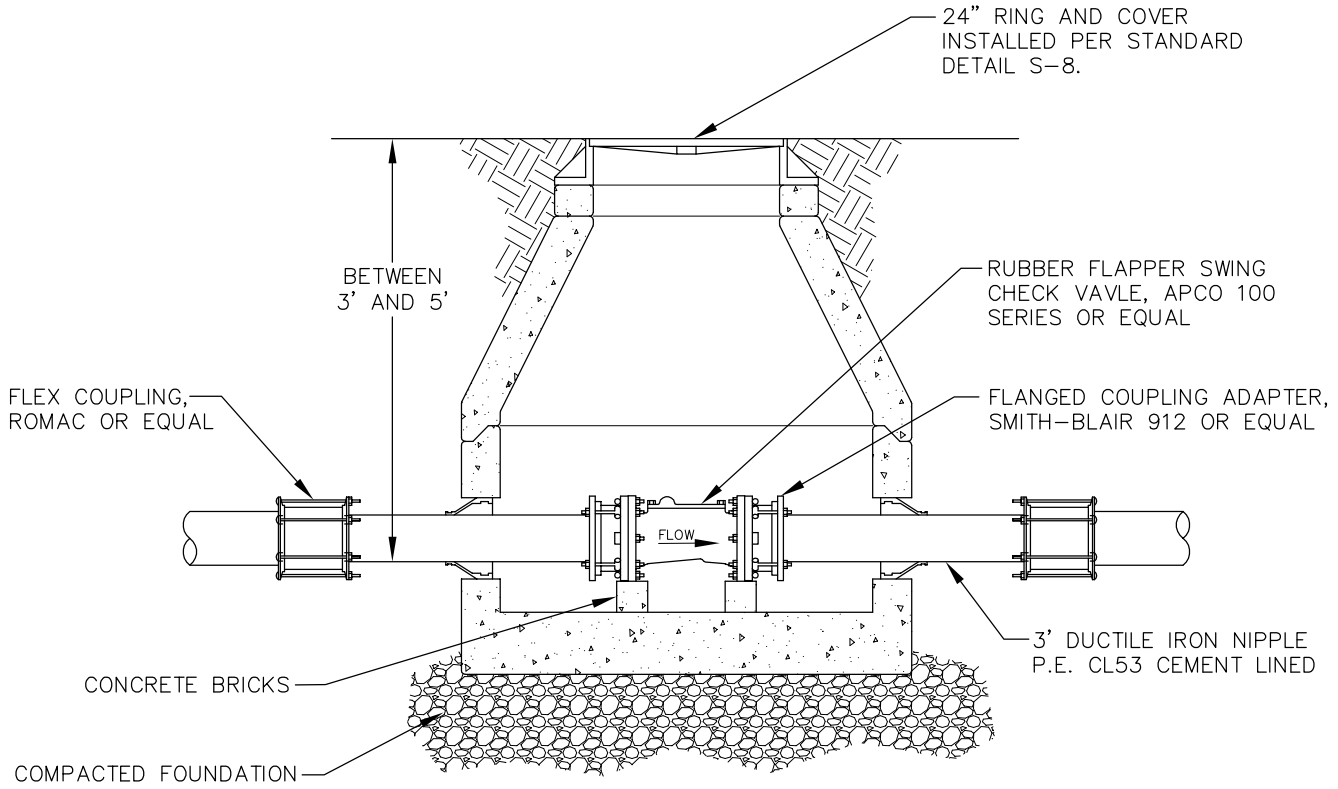

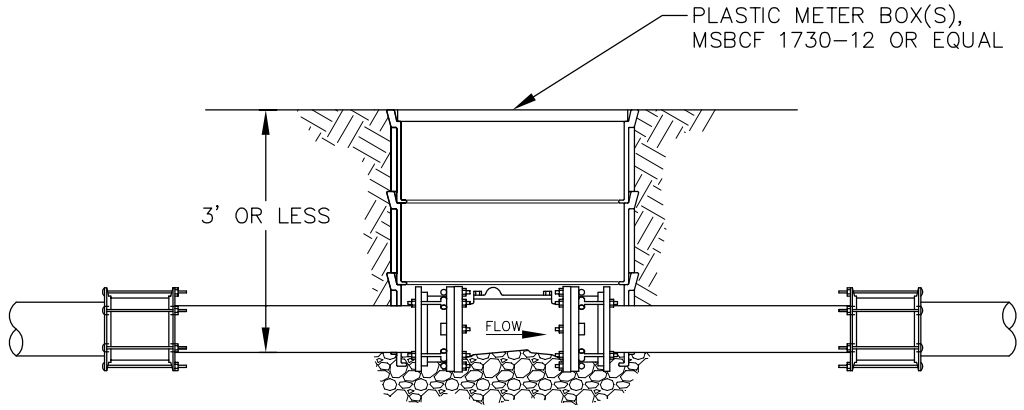

NOTES:

1. WHERE DEPTH OF PIPE INVERT IS LESS THAN 3 FEET, USE PLASTIC METER FOR VALVE CHAMBER (MID STATES PLASTIC MODEL MSBCF 1730-12 OR EQUAL). THE COVER FOR THE PLASTIC BOX SHALL BE DUCTILE IRON AND READ "SEWER", OR BE BLANK (NO LABEL).
   STACK 2 OR 3 BOXES AS NECESSARY.
2. WHERE DEPTH OF PIPE INVERT IS BETWEEN 3 FEET AND 5 FEET, USE CONCENTRIC CONE CONCRETE MANHOLE PER STANDARD DETAIL S-6.
3. WHERE DEPTH OF PIPE INVERT IS GREATER THAN 5 FEET, USE STANDARD ECCENTRIC CONCRETE MANHOLE PER STANDARD DETAIL S-1.

City of Bellevue

SEWER UTILITIES

TITLE

CHECK VALVE ASSEMBLY FOR JOINT USE SIDE SEWER (4" TO 8" DIAMETER)

NO. S-26

JANUARY 2013

NO SCALE