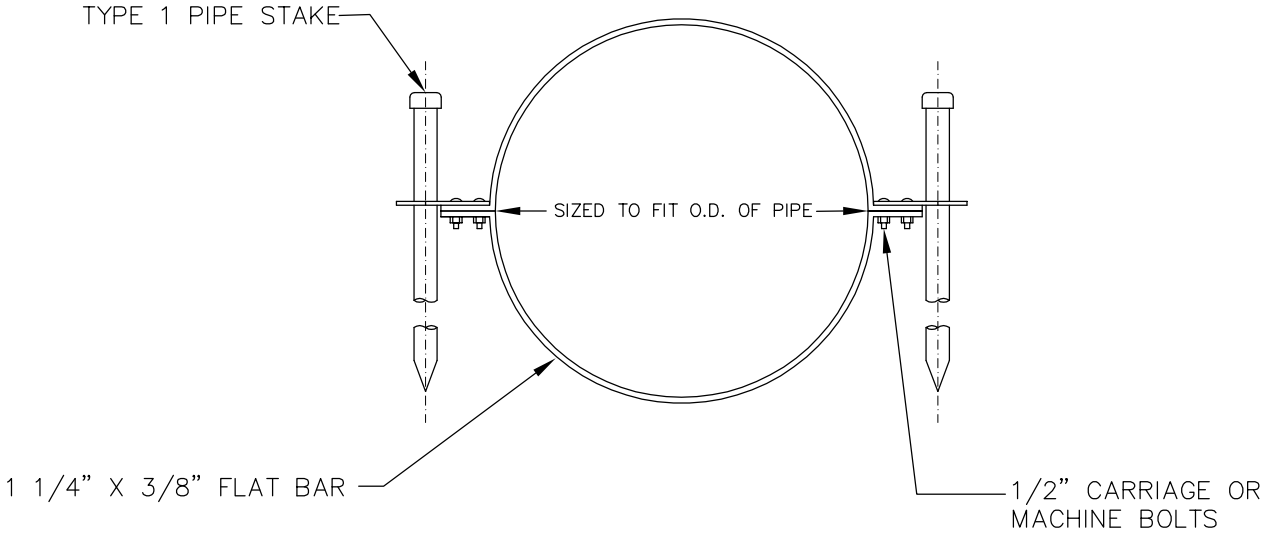

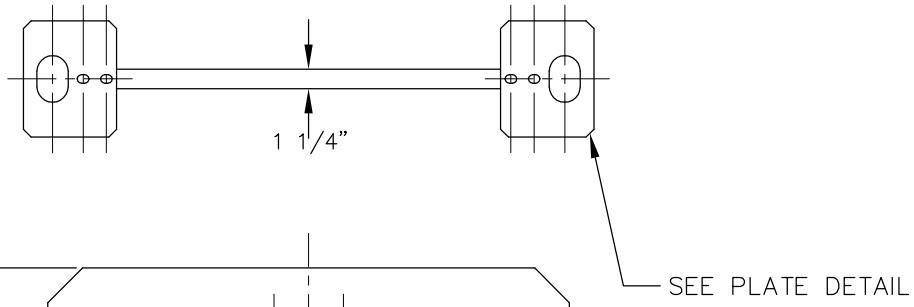

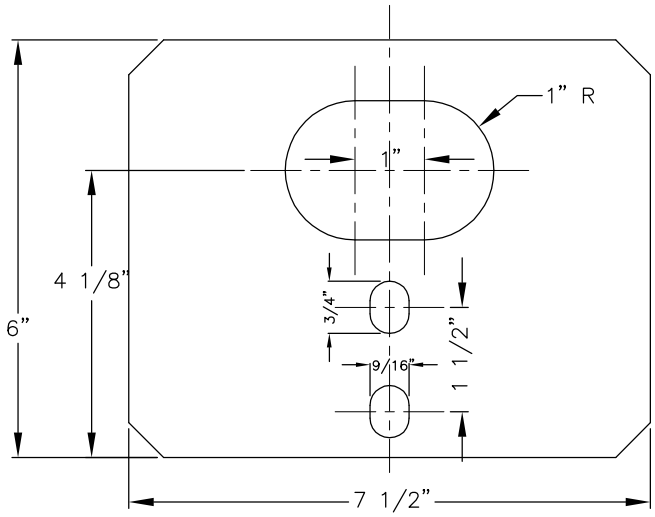

PLATE DETAIL

NOTES:

1. ALL PIPE STAKES, HARDWARE AND MATERIALS SHALL BE HOT DIPPED GALVANIZED AFTER FABRICATION.

2. TYPE 1 PIPE STAKE: 2" O. D. GALVANIZED PIPE, 6' LONG, WITH A 2" O. D. THREADED PIPE CAP OR WELDED COLLAR. THE OTHER END IS TO BE FLATTENED OR CUT TO TO A POINT.

3. ANCHOR ASSEMBLY IS AN ALTERNATE TO S-19 (BURIED PIPE) OR FOR ABOVE GROUND PIPE WHERE APPROVED BY THE CITY.

City of Bellevue

SEWER UTILITIES

TITLE

PIPE STAKE ANCHOR ASSEMBLY

JANUARY 2013

NO SCALE

NO. S-20