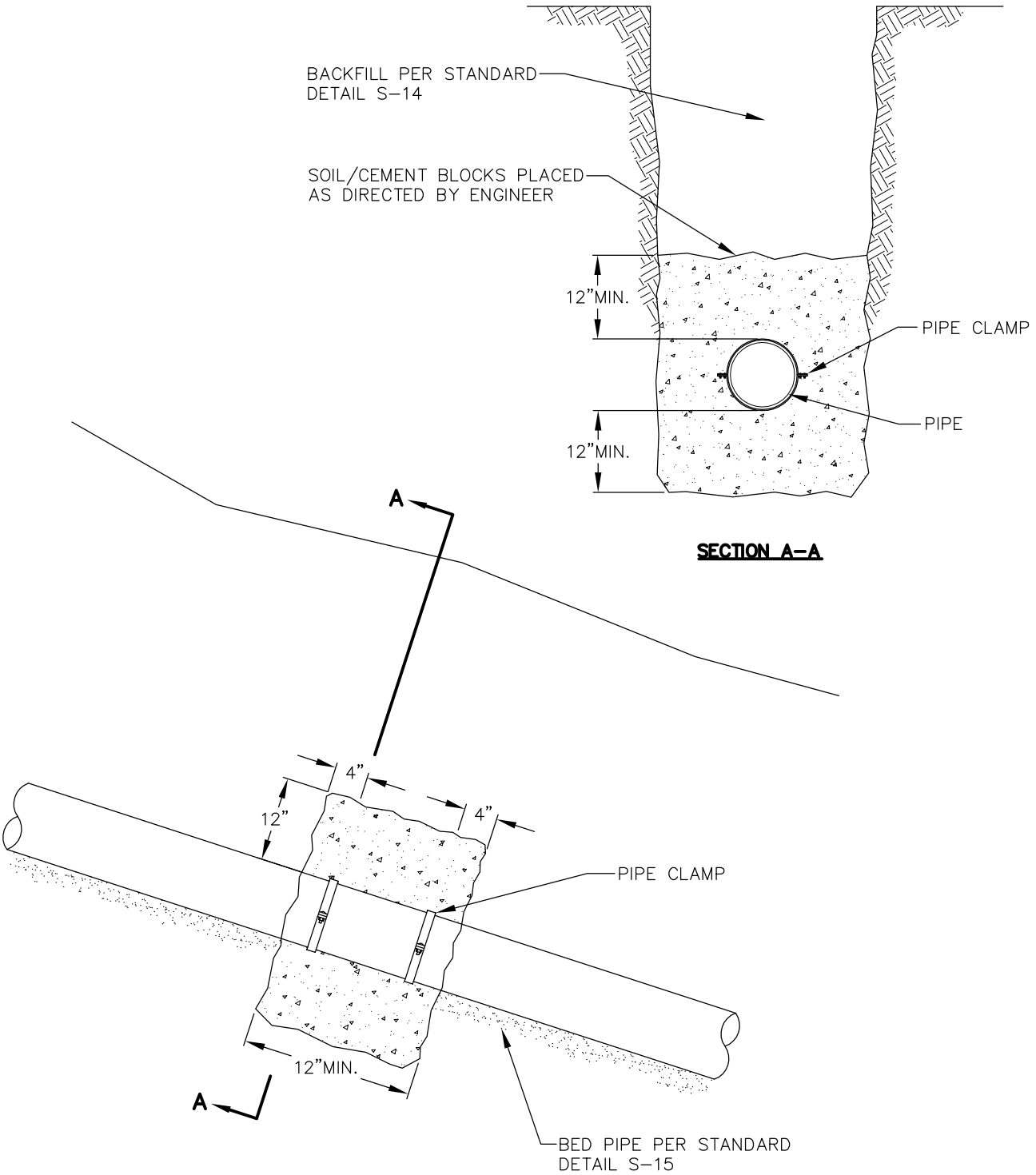

NOTES:

1. SOIL CEMENT BLOCKS REQUIRED ON PIPE SLOPES OF 20% OR GREATER.
2. SOIL CEMENT BLOCKS PLACED OVER AND AROUND. TAMPED INTO PLACE BEFORE BACKFILLING. USE 10% CEMENT WITH 90% NATIVE SOIL MIX. ADD ENOUGH WATER TO FORM A DRY MIX THAT WILL HOLD ITS SHAPE WHEN MOLDED INTO A BALL.
3. PLACE TWO PIPE CLAMPS, 4" FROM BLOCK ENDS TO PROVIDE ANCHORAGE TO SOIL/CEMENT MIX.

City of Bellevue

SEWER UTILITIES

TITLE

SOIL CEMENT PIPE ANCHORS

JANUARY 2013

NO SCALE

NO. S-19