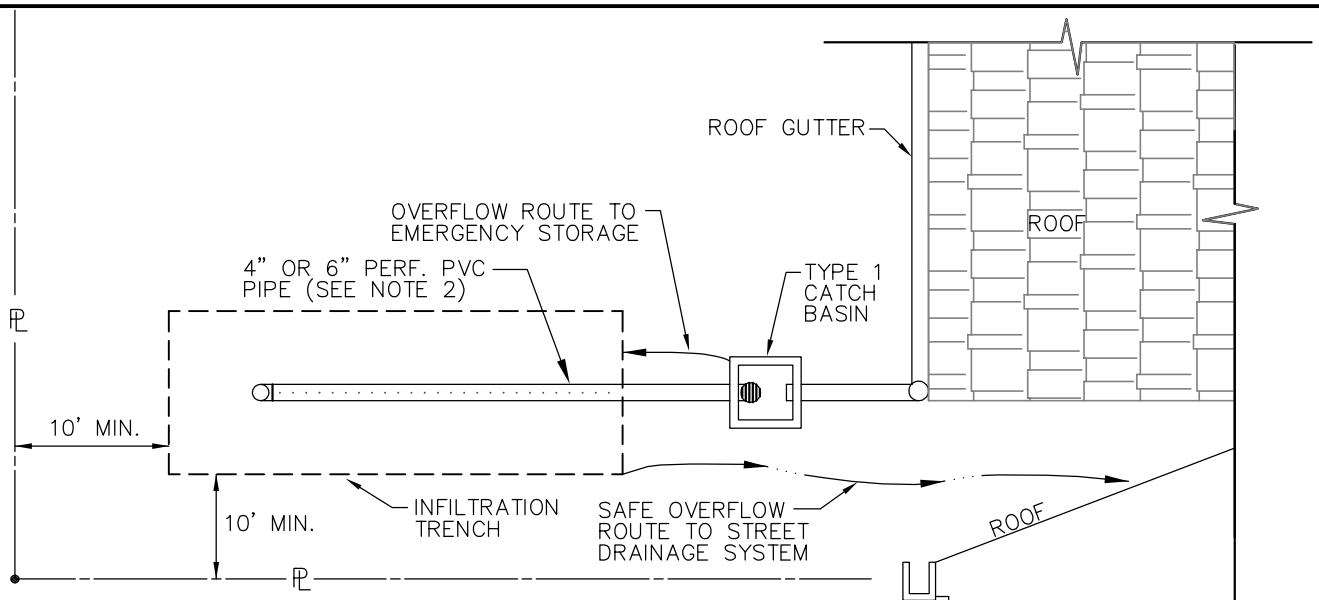

PLAN VIEW

NO SCALE

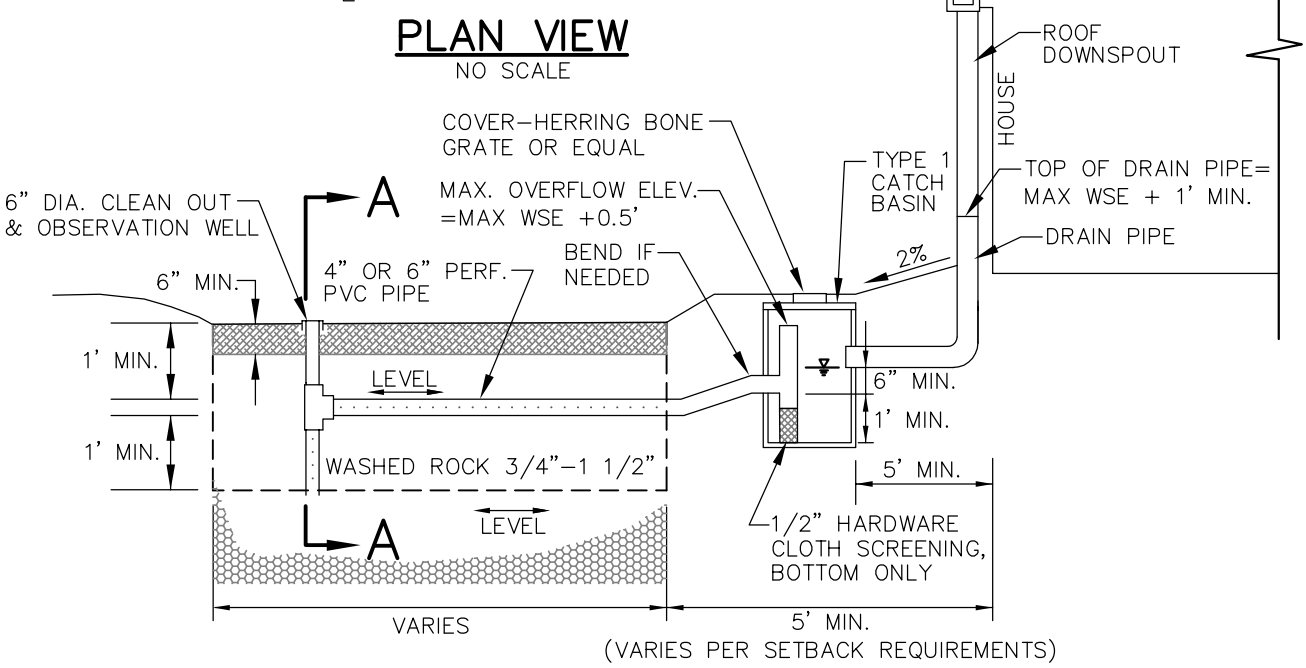

PROFILE VIEW

NO SCALE

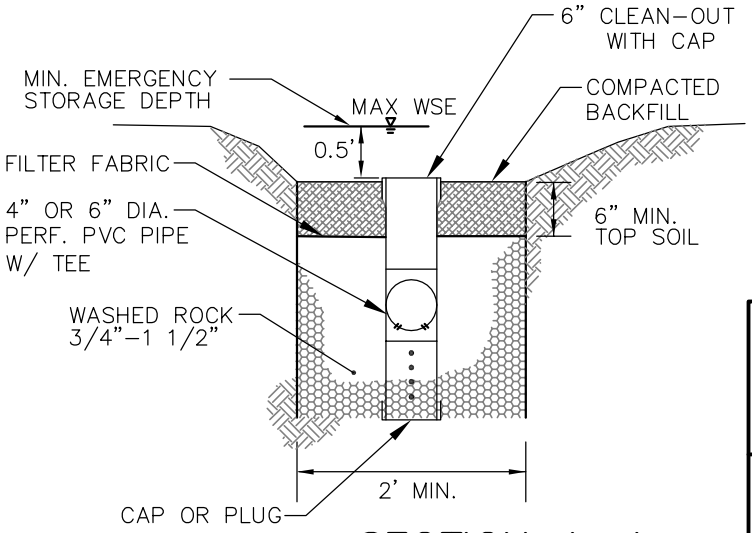

SECTION A-A

NO SCALE

NOTES:

1. TRENCH SHALL NOT BE LOCATED WITHIN 100' OF A WELL OR 30' FROM ANY PART OF A SEPTIC SYSTEM.
2. CENTER PERF. PIPE HORIZONTALLY IN TRENCH.

City of Bellevue

STORM AND SURFACE WATER UTILITY

TITLE

ROOF DOWNSPOUT INFILTRATION TRENCH

NO. NDP-23

JANUARY 2013