OUTSIDE OF R.O.W OR EASEMENT

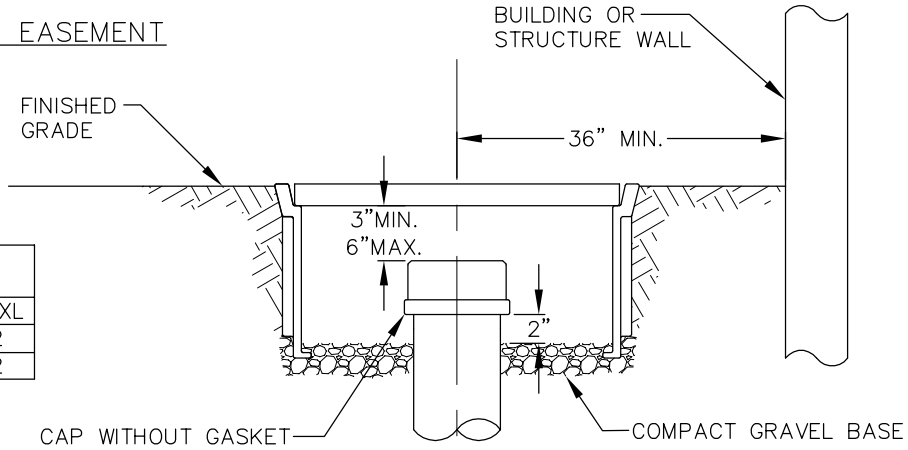

C.O. PIPE DIAMETER	MID-STATES PLASTIC BOX
4"	MSBCF-1118-18XL
6"	MSBCF-1324-12
8"	MSBCF-1730-12

RIGHT-OF-WAY OR EASEMENT

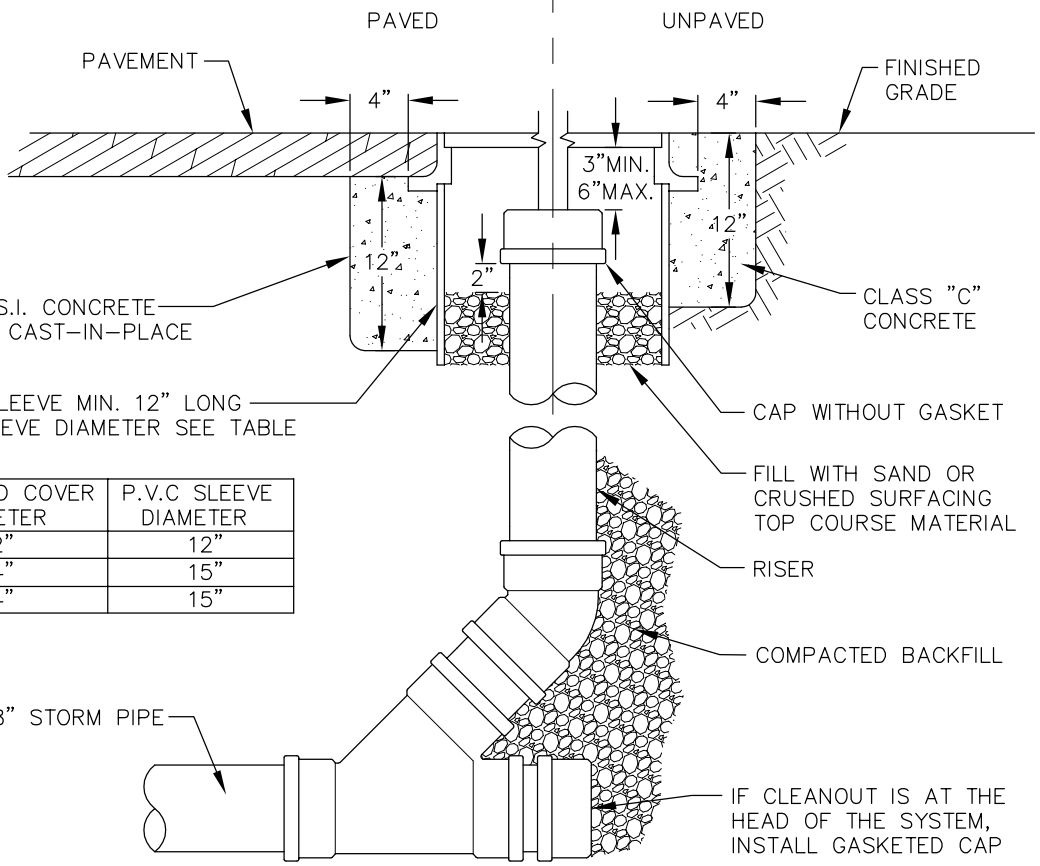

C.O. PIPE DIAMETER	RING AND COVER DIAMETER	P.V.C SLEEVE DIAMETER
4"	12"	12"
6"	14"	15"
8"	14"	15"

NOTES:

1. BOLT-LOCKING CAST IRON RING AND COVER SHALL BE USED IN RIGHT-OF-WAY AND EASEMENTS AND MUST BE RATED HS-20 IF USED IN PAVED AREAS. SEE TABLE FOR SIZES.
2. MID-STATES PLASTIC BOX OR EQUAL MAY BE USED IF C.O. IS OUTSIDE OF RIGHT-OF-WAY OR EASEMENT. SEE TABLE FOR SIZES. THE COVER FOR THE PLASTIC BOX SHALL BE DUCTILE IRON AND READ "DRAIN" OR BE BLANK (NO LABEL).
3. CAST IRON COVER SHALL READ "DRAIN."
4. LOCKING BOLTS SHALL BE 5/8"-11 N.C. 304 STAINLESS STEEL SOCKET (ALLEN) HEAD, 2" LONG.
5. 14" BOLT-LOCKING CAST IRON COVER SHALL BE EQUAL TO INLAND FOUNDRY NUMBER 209, OR 210.
6. SPECIAL "DECORATIVE" CASTING MAY BE USED IF PREAPPROVED BY CITY.

City of Bellevue

STORM AND SURFACE WATER UTILITY

TITLE

CLEANOUT TO GRADE

JANUARY 2013

NO SCALE

NO. D-52