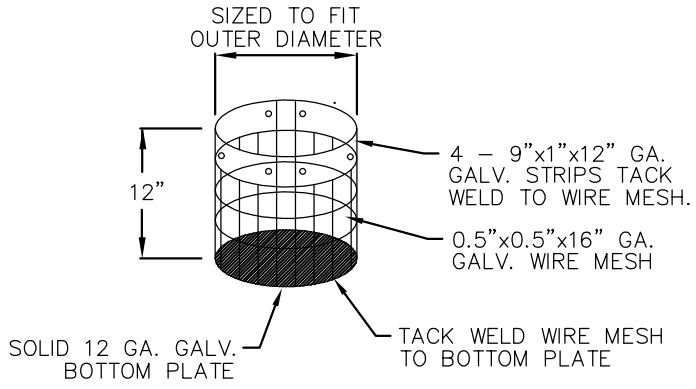

SCREEN

NOTE:
ATTACH SCREEN TO CMP CROSS W/ 6 1" GALVANIZED METAL SCREWS–2 PER STRAP, OR USE STAINLESS STEEL PIPE CLAMP

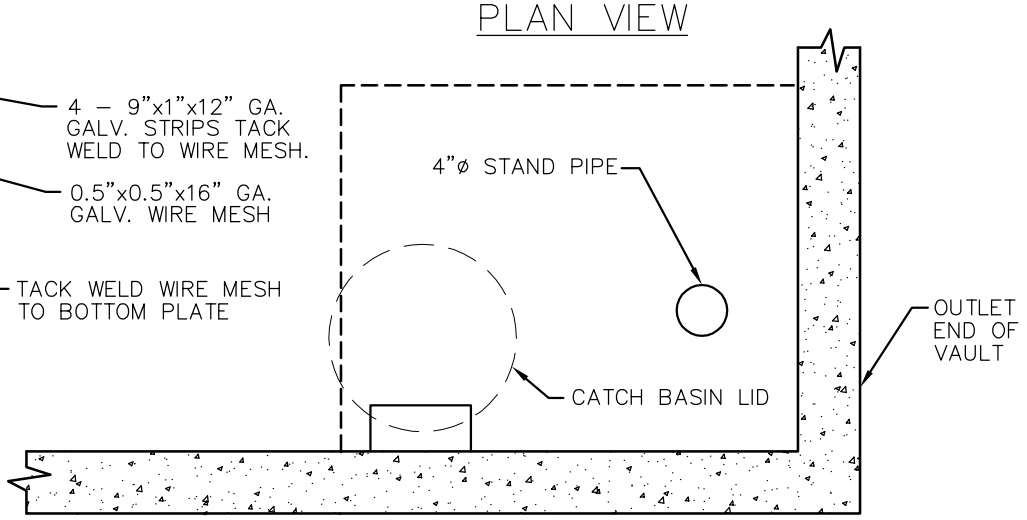

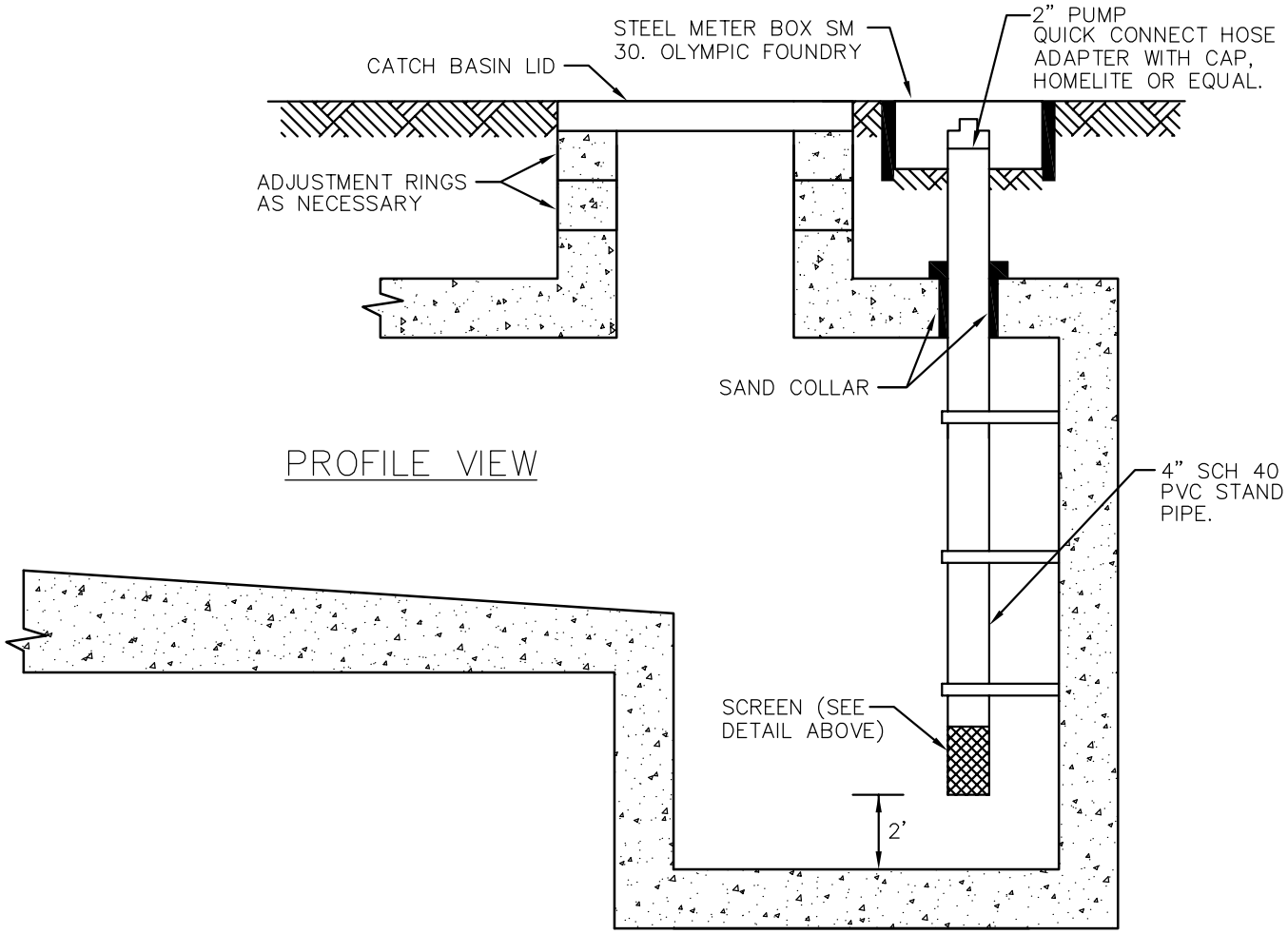

NOTE:
TO BE USED ONLY WHEN ALLOWED BY THE CITY

City of Bellevue

STORM AND SURFACE WATER UTILITY

TITLE

SUMP WITH RISER PIPE

JANUARY 2013

NO SCALE

NO. D–49