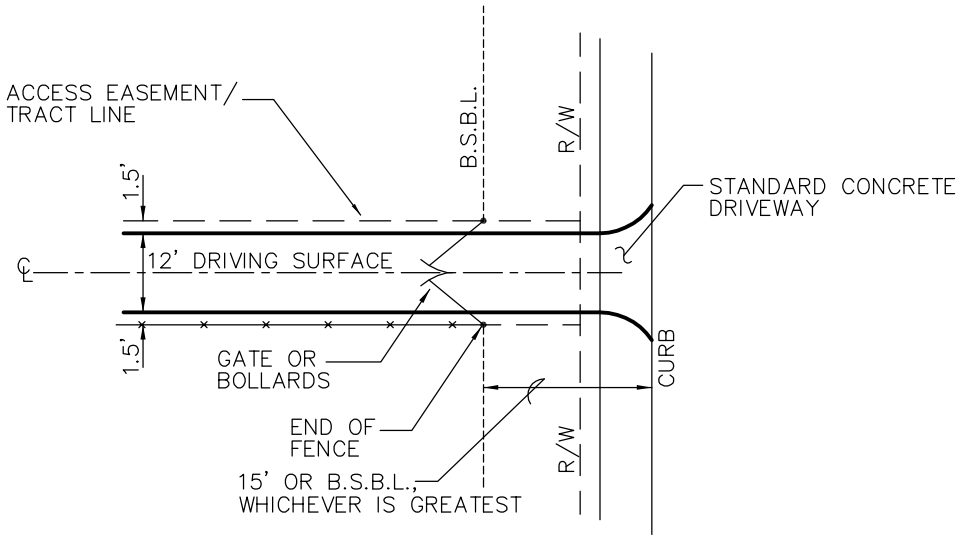

DRIVEWAY ENTRANCE

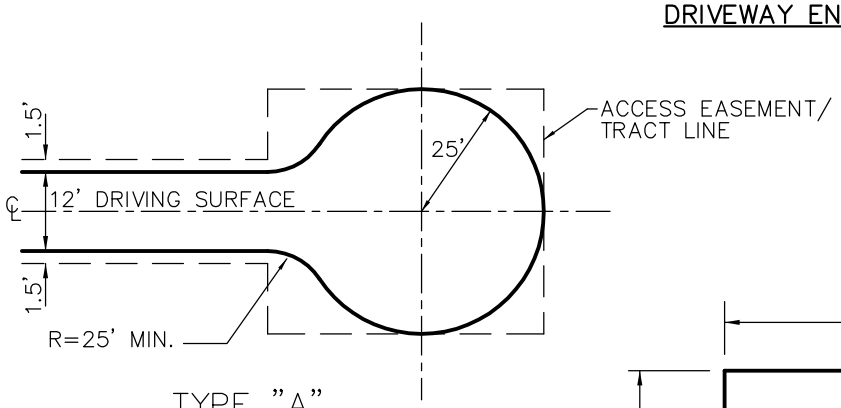

TYPE "A"
TURNAROUND

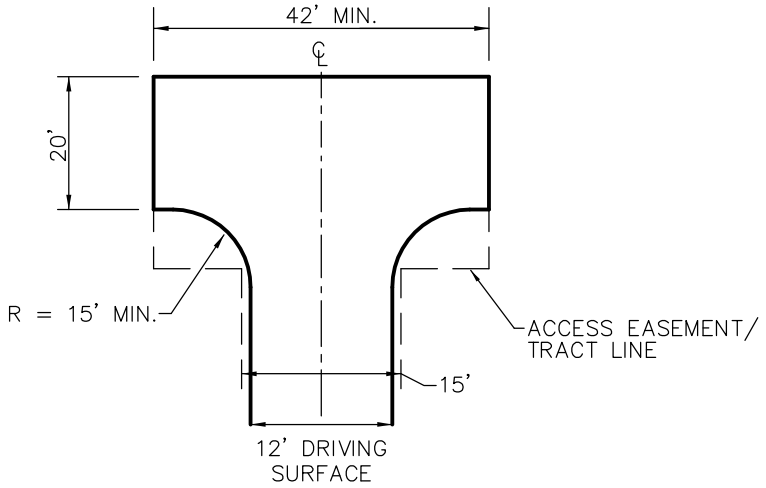

HAMMERHEAD

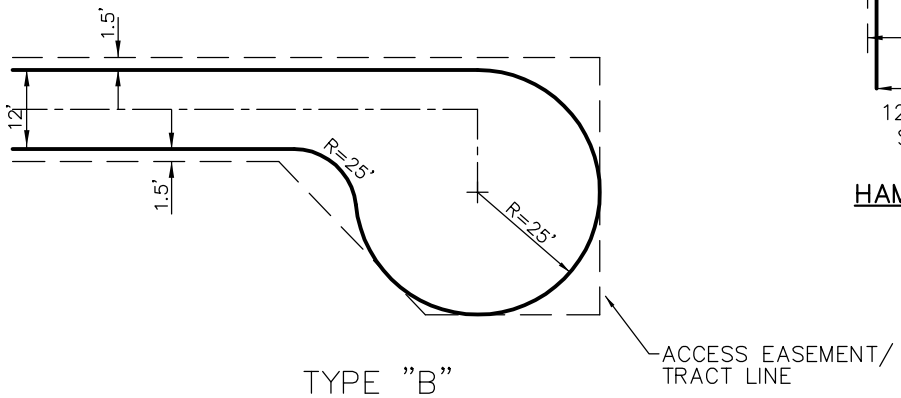

TYPE "B"
TURNAROUND

City of Bellevue

STORM AND SURFACE WATER UTILITY

TITLE

DRAINAGE FACILITY
MAINTENANCE ACCESS

JANUARY 2013

NO SCALE

NO. D-44