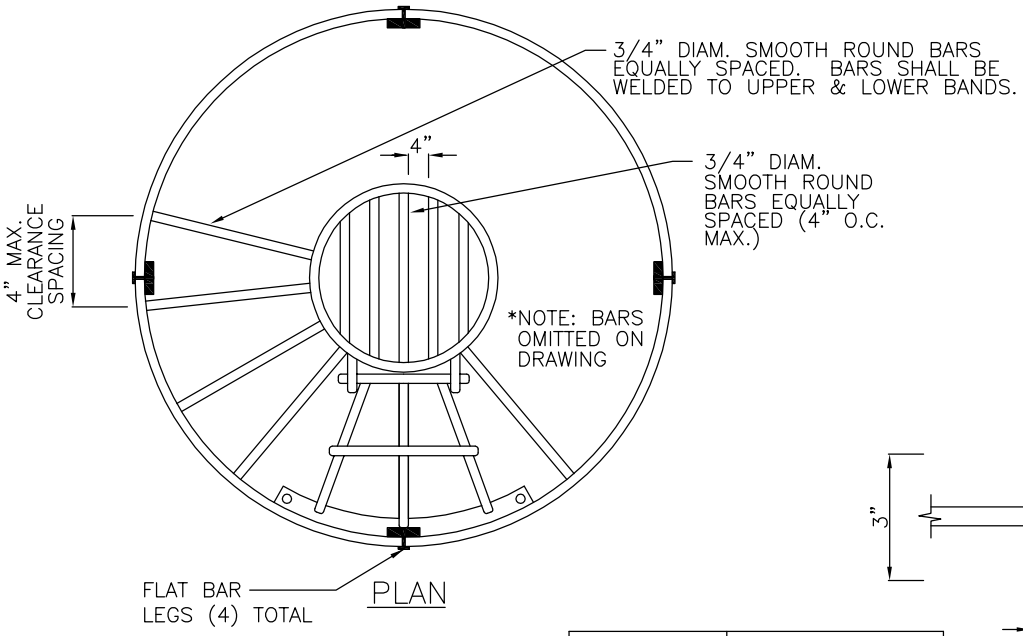

PLAN

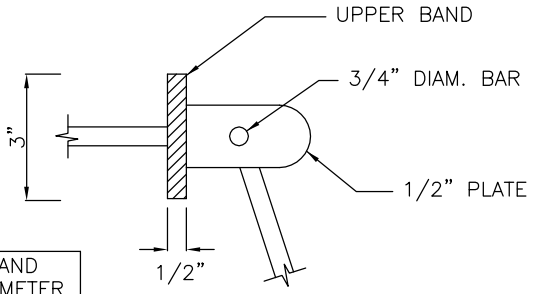

MH	UPPER BAND OUTER DIAMETER
48",54"	36"
60",72"	42"
96"	48"

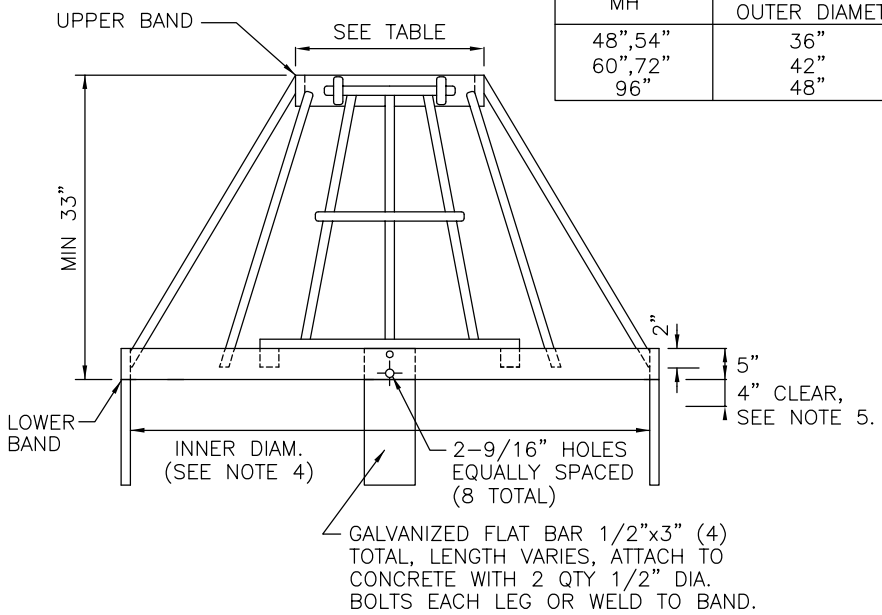

ELEVATION

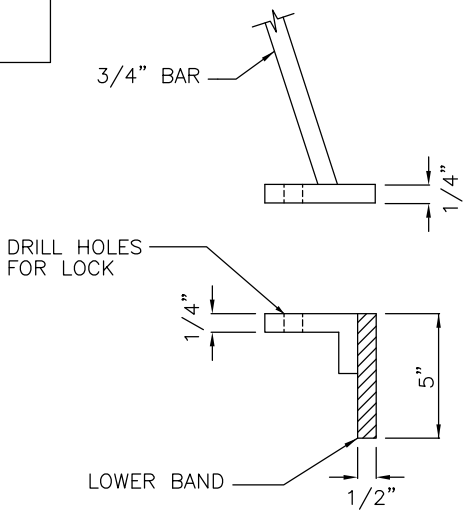

ENTRY GATE DETAIL

NOTES:

1. ALL STEEL IN PLATES, BARS AND BANDS SHALL CONFORM TO THE REQUIREMENTS OF ASTM A36.
2. STEEL DEBRIS CAGE SHALL BE HOT-DIP GALVANIZED IN ACCORDANCE WITH ASTM A123 (AASHTO M111).
3. ALUMINUM IS AN OPTIONAL CAGE MATERIAL AND MUST BE BOLTED TO THE CONCRETE STRUCTURE.
4. LOWER BAND DIMENSIONS TO MATCH STRUCTURE.
5. PROVIDE 4" CLEARANCE BETWEEN LOWER BAND AND THE TOP OF THE CONCRETE STRUCTURE.

City of Bellevue

STORM AND SURFACE WATER UTILITY

TITLE

DEBRIS CAGE

JANUARY 2013

NO SCALE

NO. D-39