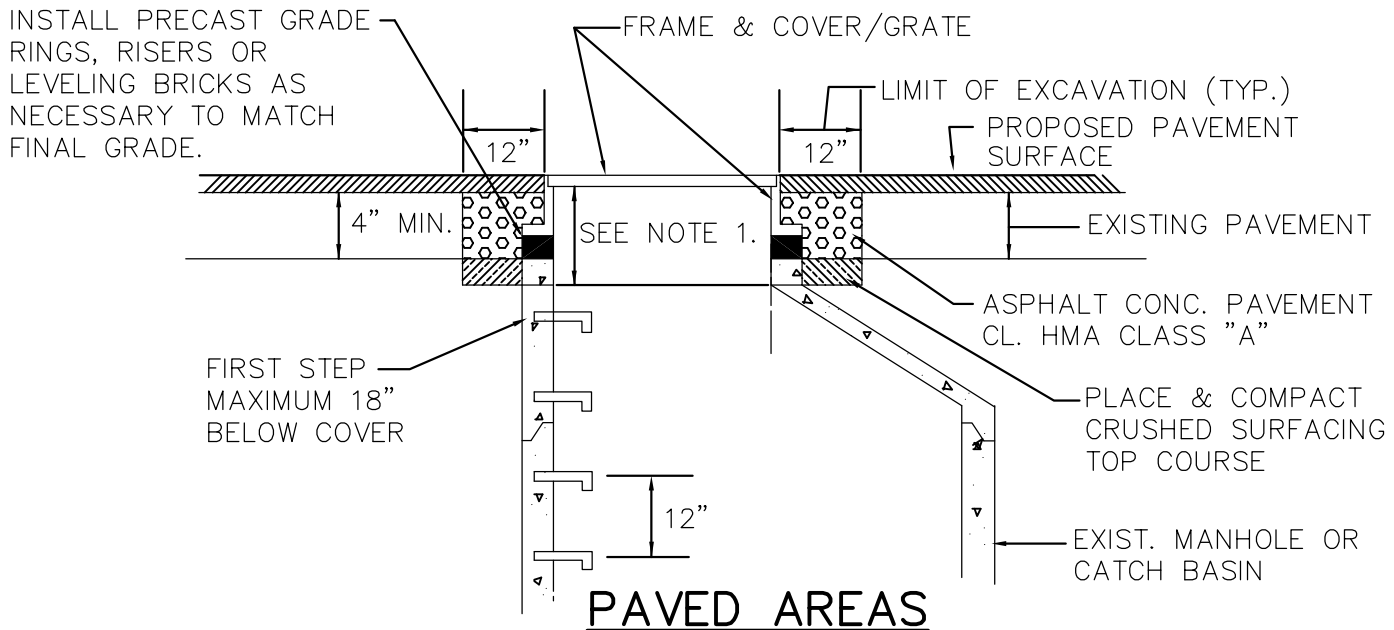

PAVED AREAS

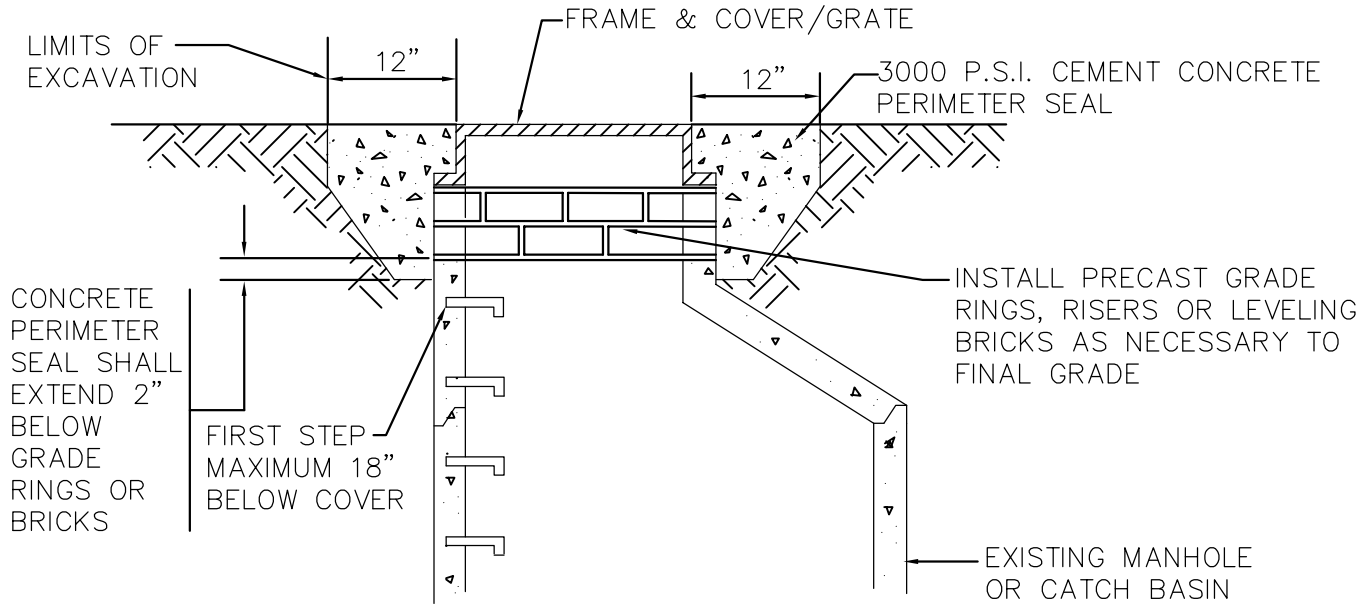

UNPAVED AREAS

NOTES:

1. WHERE DEPTH OF NECK EXCEEDS 24 INCHES, ADJUST MANHOLE/CATCH BASIN TO GRADE BY INSERTING NEW BARREL SECTION BETWEEN THE CONE/SLAB AND EXISTING BARREL.
2. GRADE RINGS, CONCRETE RISERS AND CONCRETE BRICK SHALL BE SET IN 3/4" NON-SHRINK GROUT, PLASTER SMOOTH INSIDE AND OUT.
3. STEPS OR HAND HOLDS SHALL BE ADDED AS NEEDED.
4. PRECAST GRADE RINGS AND RISERS MUST BE CAST WITH GROOVE TO ALLOW FIELD INSTALLATION OF SAFETY STEP.
5. REPLACE EXISTING FRAME AND COVER/GRATE IF NON-STANDARD OR WORN.
6. GROUT INSIDE AND OUTSIDE OF MANHOLE/ CATCH BASIN NECK TO ACHIEVE WATER TIGHT CONSTRUCTION. FINISH SMOOTH THE INSIDE OF THE NECK. USE NON-SHRINK GROUT ONLY.
7. LOCKING RING AND COVERS ARE REQUIRED IN ALL UNPAVED AREAS AND EASEMENTS. LOCKING RING AND COVER SHALL CONFORM TO STANDARD DETAIL D-22.

City of Bellevue

STORM AND SURFACE WATER UTILITY

TITLE

MANHOLE/CATCH BASIN ADJUSTMENT DETAIL

JANUARY 2013 NO SCALE

NO. D-23