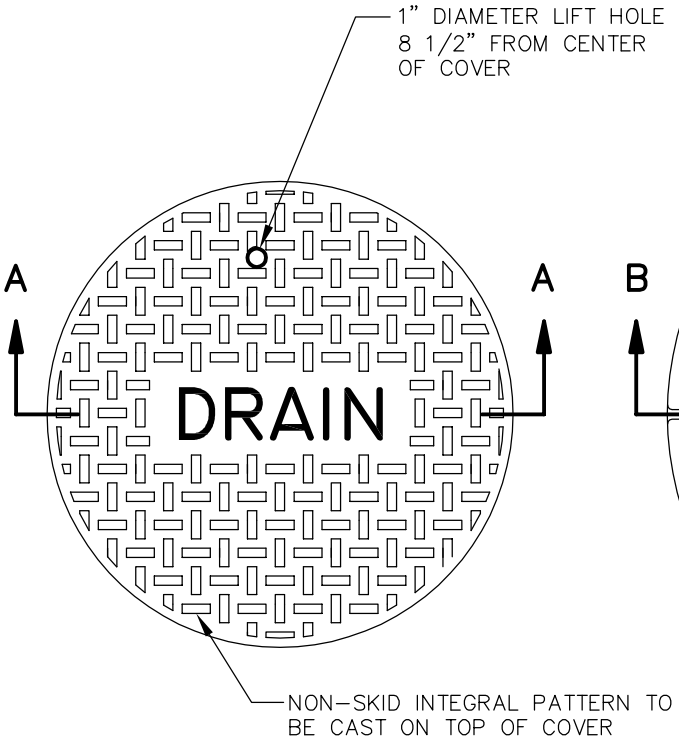

COVER PLAN

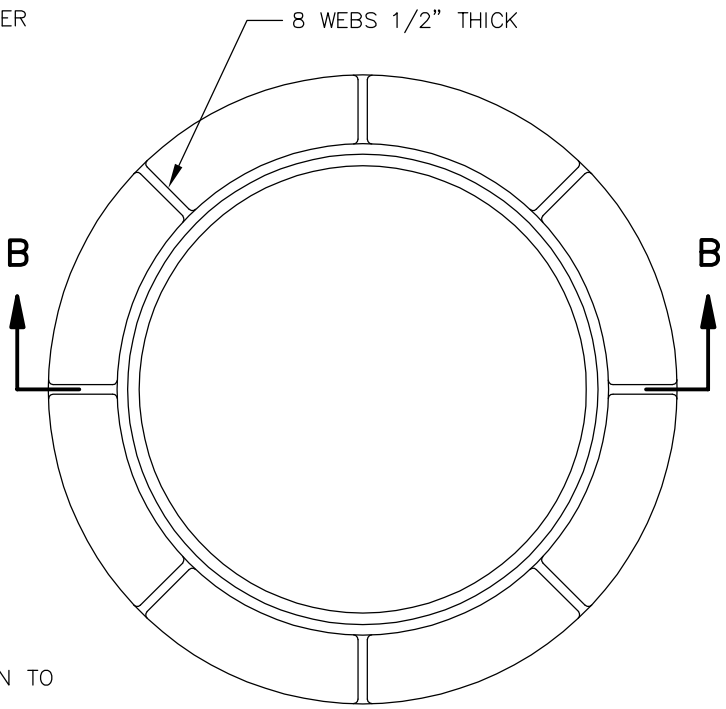

RING PLAN

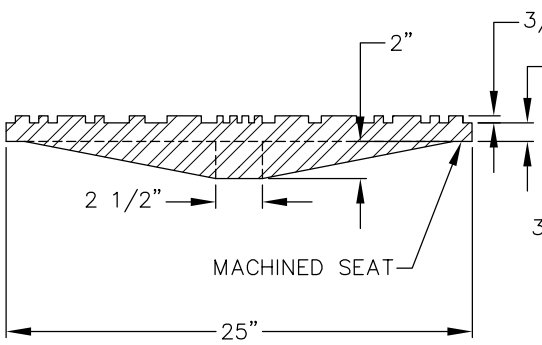

SECTION A–A

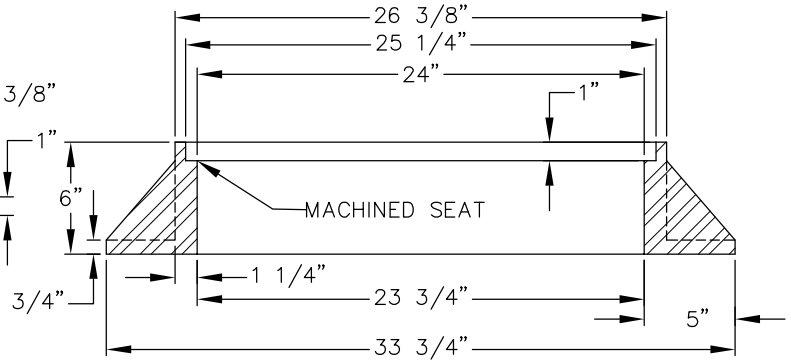

SECTION B–B

NOTES:

1. COVER SHALL HAVE THE WORD "DRAIN" CAST IN 3" RAISED LETTERS.
2. ONLY FOR USE IN PUBLIC RIGHT–OF–WAY (PAVED AREAS AND SIDEWALKS).
3. RING AND COVER SHALL BE RATED HS–20.
4. RING AND COVER MATERIAL IS DUCTILE IRON, ASTM A536 – GRADE 80–55–06 OR CAST IRON, ASTM A–48, CLASS 30.
5. OLYMPIC FOUNDRY MH30A, OR EQUAL.
6. DUCTILE OR CAST COVER SHALL HAVE MINIMUM WEIGHT OF 150 LBS.
7. DUCTILE OR CAST RING SHALL HAVE MINIMUM WEIGHT OF 210 LBS.

City of Bellevue

STORM AND SURFACE WATER UTILITY

TITLE

24" MANHOLE RING AND COVER

JANUARY 2013

NO SCALE

NO. D–21