ELEVATION

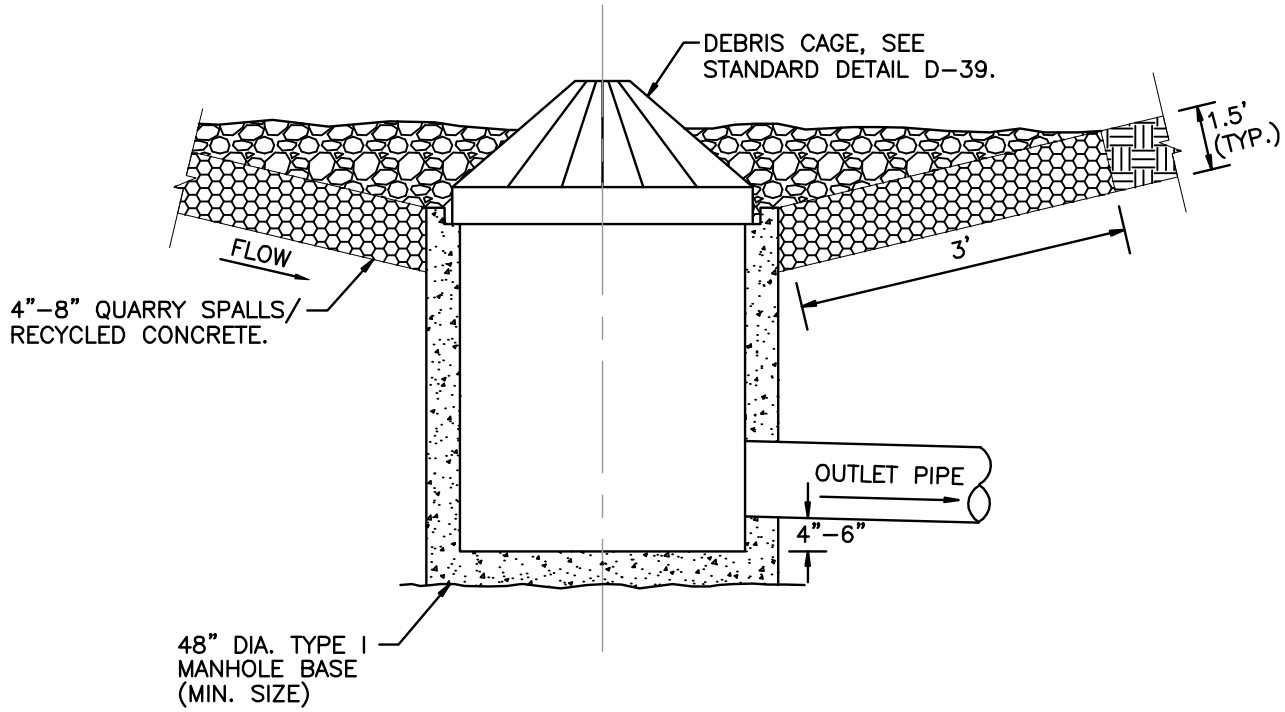

PLAN

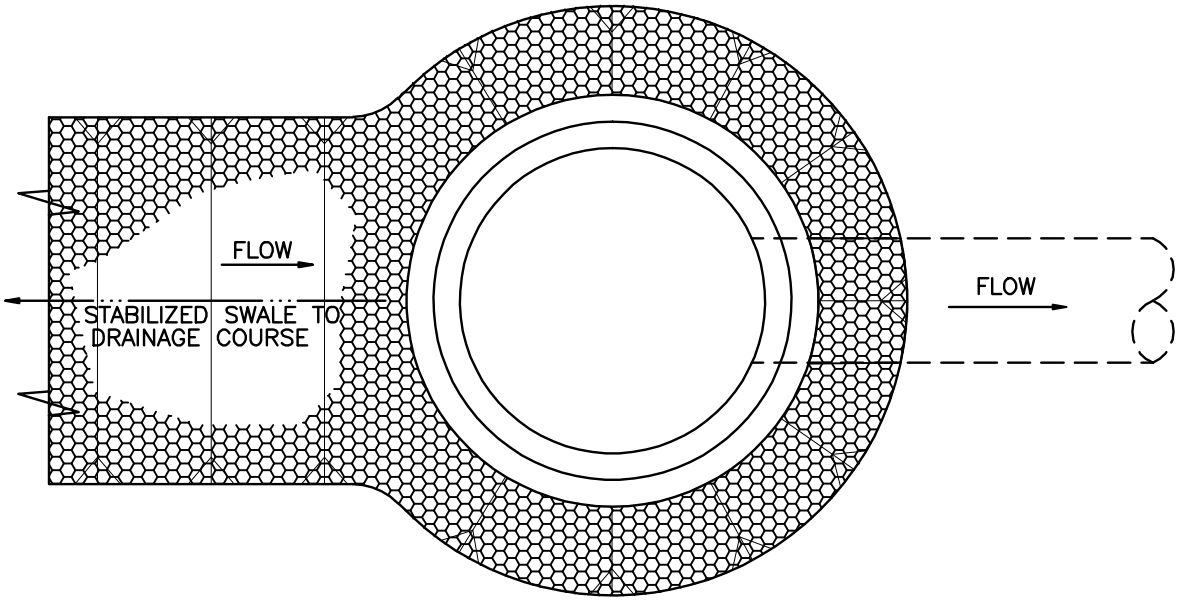

City of Bellevue

STORM AND SURFACE WATER UTILITY

TITLE

BIRD CAGE TRASH RACK STRUCTURE

NO. D-60

JANUARY 2012

NO SCALE