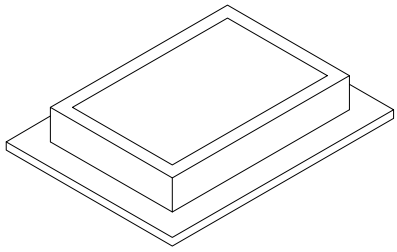

FRAME AND GRATE,
SEE APPLICABLE
STANDARD DETAILS

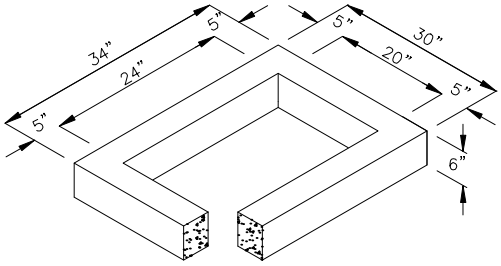


6" RISER SECTION

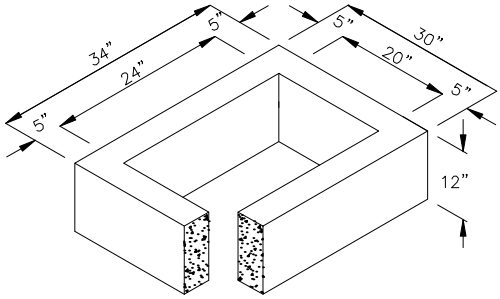


12" RISER SECTION

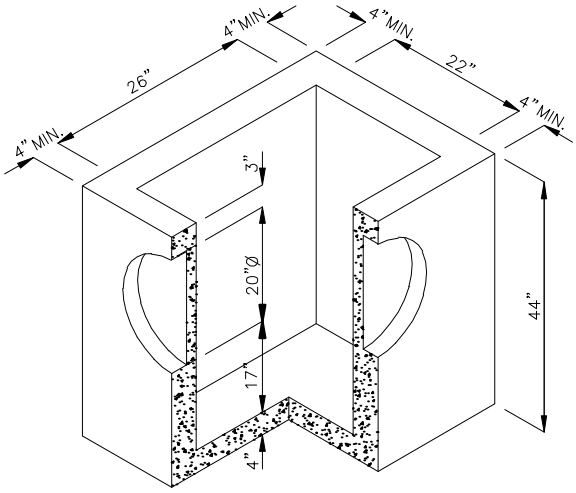


PRECAST BASE SECTION
(MEASUREMENT AT THE
TOP OF THE BASE)

NOTES:

1. CATCH BASINS SHALL BE CONSTRUCTED IN ACCORDANCE WITH ASTM C478 (AASHTO M 199) & C890 UNLESS OTHERWISE SHOWN ON PLANS OR NOTED IN THE STANDARD SPECIFICATIONS.
2. AS AN ACCEPTABLE ALTERNATIVE TO REBAR, WELDED WIRE FABRIC HAVING A MIN. AREA OF 0.12 SQUARE INCHES PER FOOT MAY BE USED. WELDED WIRE FABRIC SHALL COMPLY TO ASTM A497 (AASHTO M 221). WIRE FABRIC SHALL NOT BE PLACED IN KNOCKOUTS.
3. APPLY NON-SHRINK GROUT TO INSIDE AND OUTSIDE OF ALL JOINTS, RINGS, RISERS AND FRAMES.
4. PRECAST BASES SHALL BE FURNISHED WITH CUTOUTS OR KNOCKOUTS. KNOCKOUTS SHALL HAVE A WALL THICKNESS OF 2" MIN. ALL PIPE SHALL BE INSTALLED IN FACTORY PROVIDED KNOCKOUTS. UNUSED KNOCKOUTS NEED NOT BE GROUTED IF WALL IS LEFT INTACT.
5. KNOCKOUT OR CUTOUT HOLE SIZE IS EQUAL TO PIPE OUTER DIAM. PLUS CATCH BASIN WALL THICKNESS.
6. ROUND KNOCKOUTS MAY BE ON ALL 4 SIDES, WITH MAX. DIAM. OF 20". KNOCKOUTS MAY BE EITHER ROUND OR "D" SHAPE.
7. THE MAX. DEPTH FROM THE FINISHED GRADE TO THE PIPE INVERT IS 4'-0".
8. THE TAPER ON THE SIDES OF THE PRECAST BASE SECTION AND RISER SECTION SHALL NOT EXCEED 1/2"/FT.
9. CATCH BASIN FRAME AND GRATE SHALL BE IN ACCORDANCE WITH STANDARD SPECIFICATIONS. MATING SURFACES SHALL BE FINISHED TO ASSURE NON-ROCKING FIT WITH ANY COVER POSITION.
10. VERTICAL EDGE OF RISER OR BRICK SHALL NOT BE MORE THAN 2" FROM VERTICAL EDGE OF CATCH BASIN WALL.

City of Bellevue

STORM AND SURFACE WATER UTILITY

TITLE

CATCH BASIN TYPE I

JANUARY 2012

NO SCALE

NO. D-2