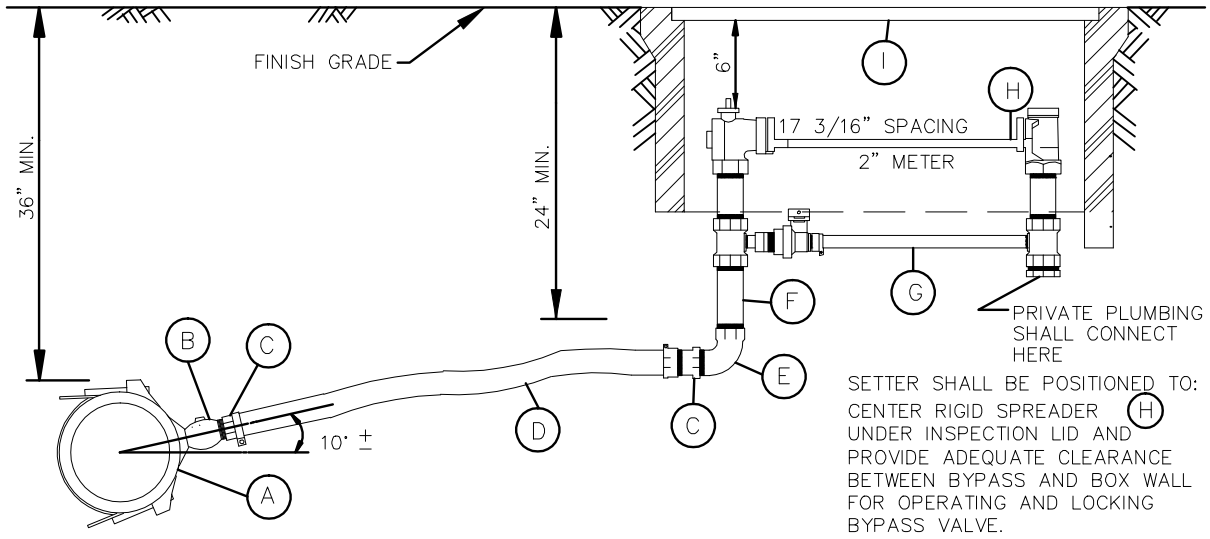

(A) EPOXY COATED HIGH TENSILE D.I. SERVICE SADDLE W/ DOUBLE STAINLESS STEEL STRAP AND EPOXY COATED BOSS, 2" AWWA TAPER (CC) TAP, FORD FC202 OR FCD202, OR EQUAL, SIZE AS REQUIRED.

(B) BALL CORPORATION STOP, 2" AWWA TAPER (CC) INLET BY 2" MALE IRON PIPE THREAD OUTLET WITH BALL VALVE (OR EQUAL LOW-FRICTION VALVE), FORD BALLCORP FB1000-7. MUELLER ORISEAL NO. H-9968, OR EQUAL.

(C) COUPLING, 2" MALE IRON PIPE THREAD BY 2" PACK JOINT (COMPRESSION FITTING) FOR COPPER, FORD C14-77, MUELLER NO. H-15451, OR EQUAL.

(D) 2" COPPER TUBING, TYPE K.

(E) 2" STREET ELL, BRASS, FEMALE IRON PIPE THREAD BY FEMALE IRON PIPE THREAD.

(F) 2" NIPPLE, BRASS, M.I.P.T. x M.I.P.T., 6" LONG OR AS REQUIRED TO MEET PROPER GRADE.

(G) 2" BRASS AND COPPER METER SETTER WITH HIGH BYPASS:
- FLANGED BALL METER VALVE ON INLET AND OUTLET
- BALL VALVE ON BYPASS
- PADLOCK WINGS ON ALL VALVES
- VERTICAL INLET AND OUTLET, F.I.P.T.
- BUSHING INCLUDED ON OUTLET

FORD VBB77-12B-11-77 WITH LOW BYPASS OR A.Y. MCDONALD 20B712WWFF775 VERTICAL METER SETTER WITH VALVE ROTATED 90 DEG., OR EQUAL.

(H) RIGID METER SPREADER, SUPPLIED BY CITY OF BELLEVUE, TO BE INSTALLED IN METER SETTER BY CONTRACTOR.

(I) METER BOX, EQUAL TO:
CARSON INDUSTRIES 1730-18 BCFXL METER BOX WITH 1730 COVER WITH MAX VIEW READER DOOR IN NON-TRAVELED AREAS. OLYMPIC FOUNDRY SM30 IN SIDEWALK AND IN AREAS WITH VEHICULAR TRAFFIC.

NOTES:

1. SERVICE LINE SHALL BE PERPENDICULAR TO THE WATERMAIN, UNLESS OTHERWISE APPROVED BY THE ENGINEER.
2. BYPASS WILL BE LOCKED OFF BY CONSTRUCTION INSPECTOR WHEN METER SPREADER IS INSTALLED.
3. METER WILL BE SUPPLIED AND INSTALLED BY THE CITY OF BELLEVUE.

City of Bellevue

WATER UTILITY

TITLE

2" DOMESTIC WATER AND/OR FIRE SERVICE

JANUARY 2011

NO SCALE

NO. W-29