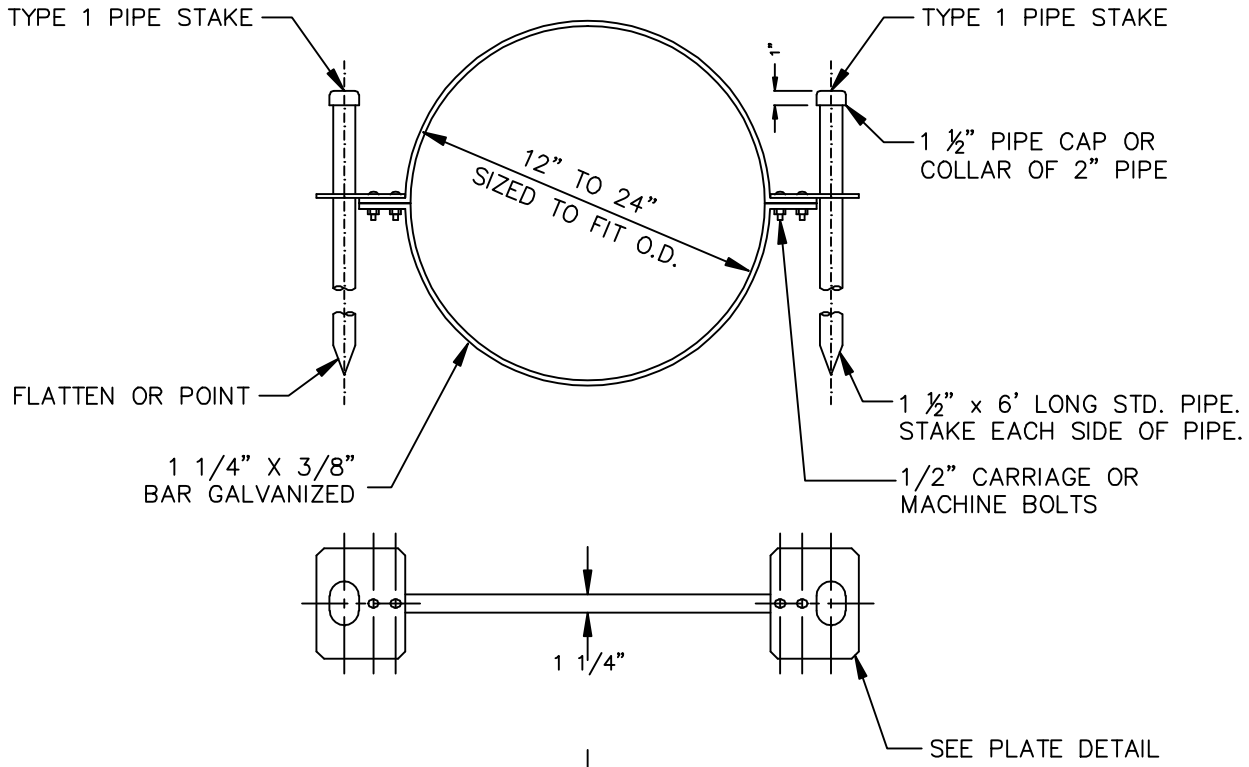

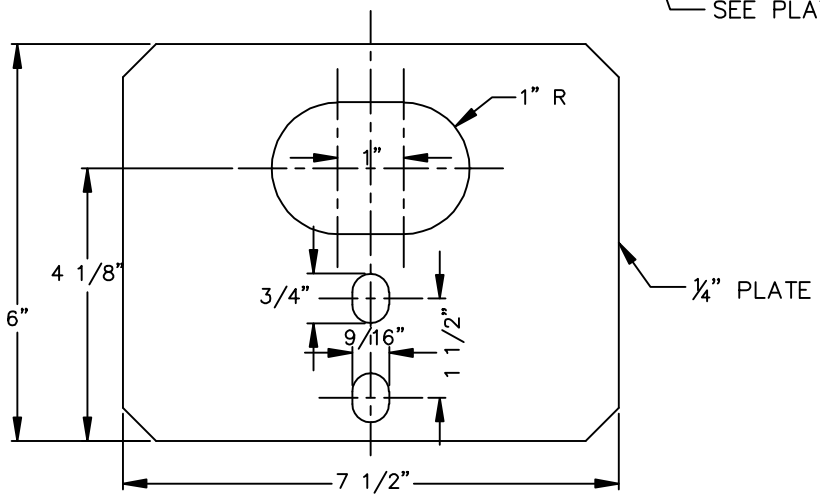

PLATE DETAIL

NOTES:

1. ALL PIPE STAKES, HARDWARE AND MATERIALS SHALL BE HOT DIPPED GALVANIZED AFTER FABRICATION.

City of Bellevue

STORM AND SURFACE WATER UTILITY

TITLE

PIPE STAKE ANCHOR ASSEMBLY

JANUARY, 2010

NO SCALE

NO. D-57