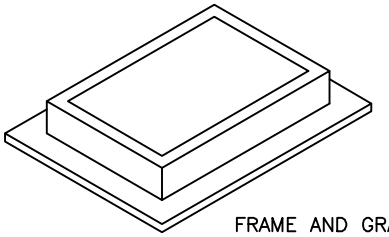

FRAME AND GRATE, SEE APPLICABLE STANDARD DETAILS

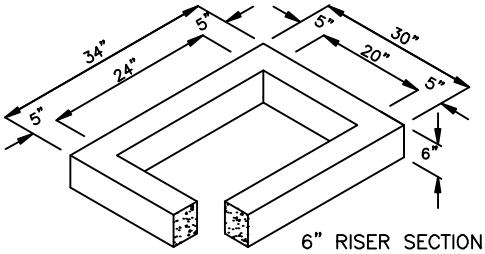

6" RISER SECTION

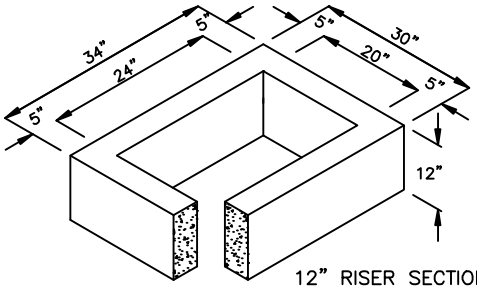

12" RISER SECTION

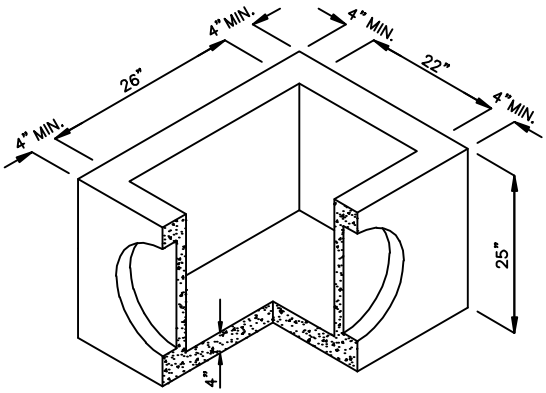

PRECAST BASE SECTION (MEASUREMENT AT THE TOP OF THE BASE)

NOTES:

1. CONCRETE INLET TO BE CONSTRUCTED IN ACCORDANCE WITH ASTM C478 & C890 UNLESS OTHERWISE SHOWN ON PLANS OR NOTED IN THE STANDARD SPECIFICATIONS.
2. AS AN ACCEPTABLE ALTERNATIVE TO REBAR, WELDED WIRE FABRIC HAVING A MIN. AREA OF 0.12 SQUARE INCHES PER FOOT MAY BE USED. WELDED WIRE FABRIC SHALL COMPLY TO ASTM A497. WIRE FABRIC SHALL NOT BE PLACED IN KNOCKOUTS.
3. VERTICAL EDGE OF RISER OR BRICK SHALL NOT BE MORE THAN 2" FROM VERTICAL EDGE OF CONCRETE INLET.
4. PRECAST BASES SHALL BE FURNISHED WITH CUTOUTS OR KNOCKOUTS. KNOCKOUTS SHALL HAVE A WALL THICKNESS OF 2" MIN. ALL PIPE SHALL BE INSTALLED IN FACTORY PROVIDED KNOCKOUTS. UNUSED KNOCKOUTS NEED NOT BE GROUTED IF WALL IS LEFT INTACT.
5. KNOCKOUT OR CUTOUT HOLE SIZE IS EQUAL TO PIPE OUTER DIAM. PLUS CONCRETE INLET WALL THICKNESS.
6. ROUND KNOCKOUTS MAY BE ON ALL 4 SIDES WITH MAX. DIAM. OF 16".
7. THE MAX. DEPTH FROM THE FINISHED GRADE TO THE PIPE INVERT IS 4'–0".
8. THE TAPER ON THE SIDES OF THE PRECAST BASE SECTION AND RISER SECTION SHALL NOT EXCEED 1/2"/FT.
9. CONCRETE INLET FRAME AND GRATES SHALL BE IN ACCORDANCE WITH STANDARD SPECIFICATIONS. MATING SURFACES SHALL BE FINISHED TO ASSURE NON–ROCKING FIT WITH ANY COVER POSITION.
10. APPLY NON–SHRINK GROUT TO INSIDE AND OUTSIDE OF ALL JOINTS, RINGS, RISERS AND FRAMES.

City of Bellevue

STORM AND SURFACE WATER UTILITY

TITLE

CONCRETE INLET

JANUARY, 2010

NO SCALE

NO. D–1