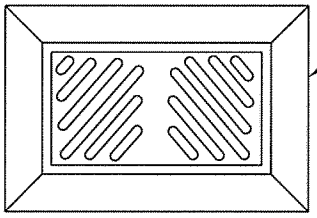

PROVIDE CONCRETE FUNNEL TO CONTAIN WATER FROM PRESSURE RELIEF DISCHARGE.

PARKING LOT/ AREA GRATE AND FRAME PER STANDARDS

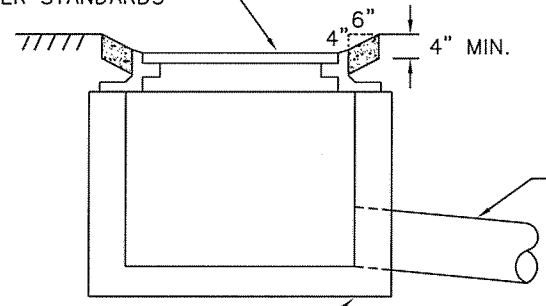

8" DIA DRAIN TO DAYLIGHT OR STORM SYSTEM.

CONCRETE INLET PER STANDARDS

PRESSURE RELIEF DRAIN

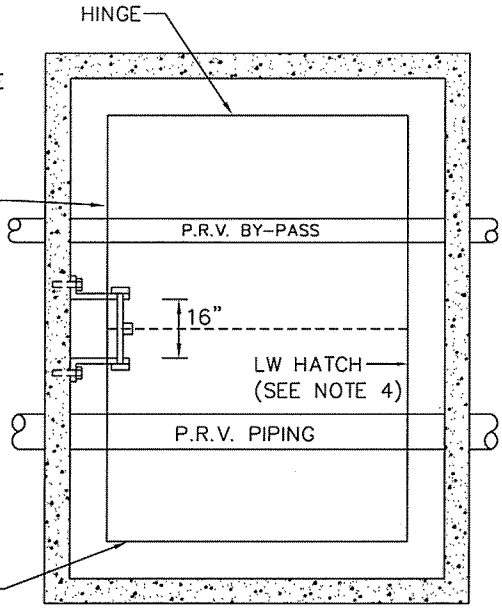

PLAN VIEW

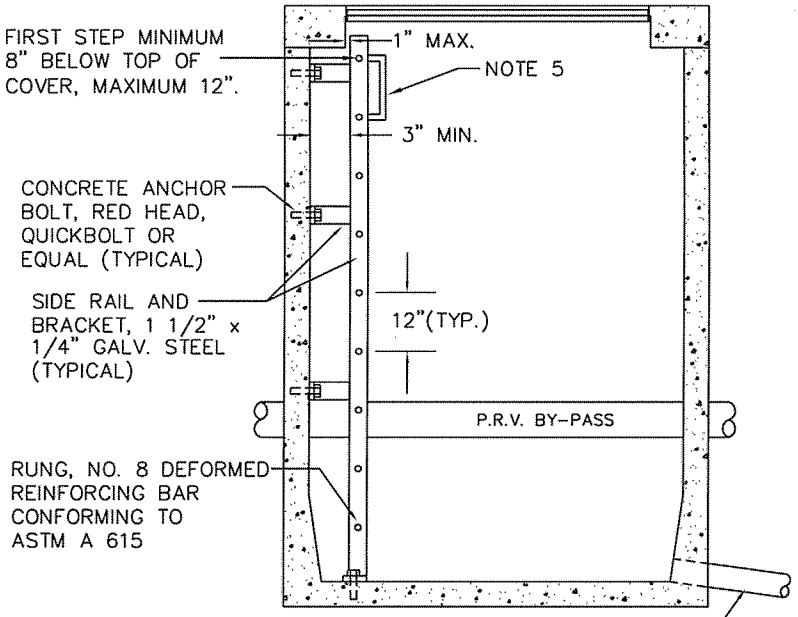

ELEVATION VIEW

NOTES:

1. LADDER TO BE SECURED TO VAULT WALL AT 3 LOCATIONS, ONE AT THE TOP, MIDDLE AND BOTTOM.
2. ALL LADDER PARTS TO BE GALVANIZED CONFORMING TO ASTM A 123
3. LOCATE PRESSURE RELIEF DRAIN OUTSIDE PEDESTRIAN AND TRAFFIC AREAS.
4. ACCESS HATCH SHALL BE LOCKING ALUMINUM LW PRODUCTS HHD 48"x48" DOUBLE DOOR MODEL RATED FOR HS-25 LOADING WITH LIGHT BLAST 5086 SKID RESISTANCE APPLICATION. HATCHES SHALL INCLUDE RECESSED PADLOCK HASP SIZED TO ACCEPT CITY OF BELLEVUE WATER DIVISION PADLOCKS (CONTACT LW PRODUCTS).
5. LADDER-UP ATTACHMENT REQUIRED ON ALL VAULT LADDERS. BILCO MODEL LU-2, OR EQUAL.
6. MANHOLE LID IS OPTIONAL ONLY WHEN STATION COVER IS LOCATED IN TRAFFIC.

JANUARY 2008 NO SCALE

City of Bellevue WATER UTILITY

TITLE

PRESSURE REDUCING STATION ACCESS LADDER AND PRESSURE RELIEF DRAIN NO. W-19