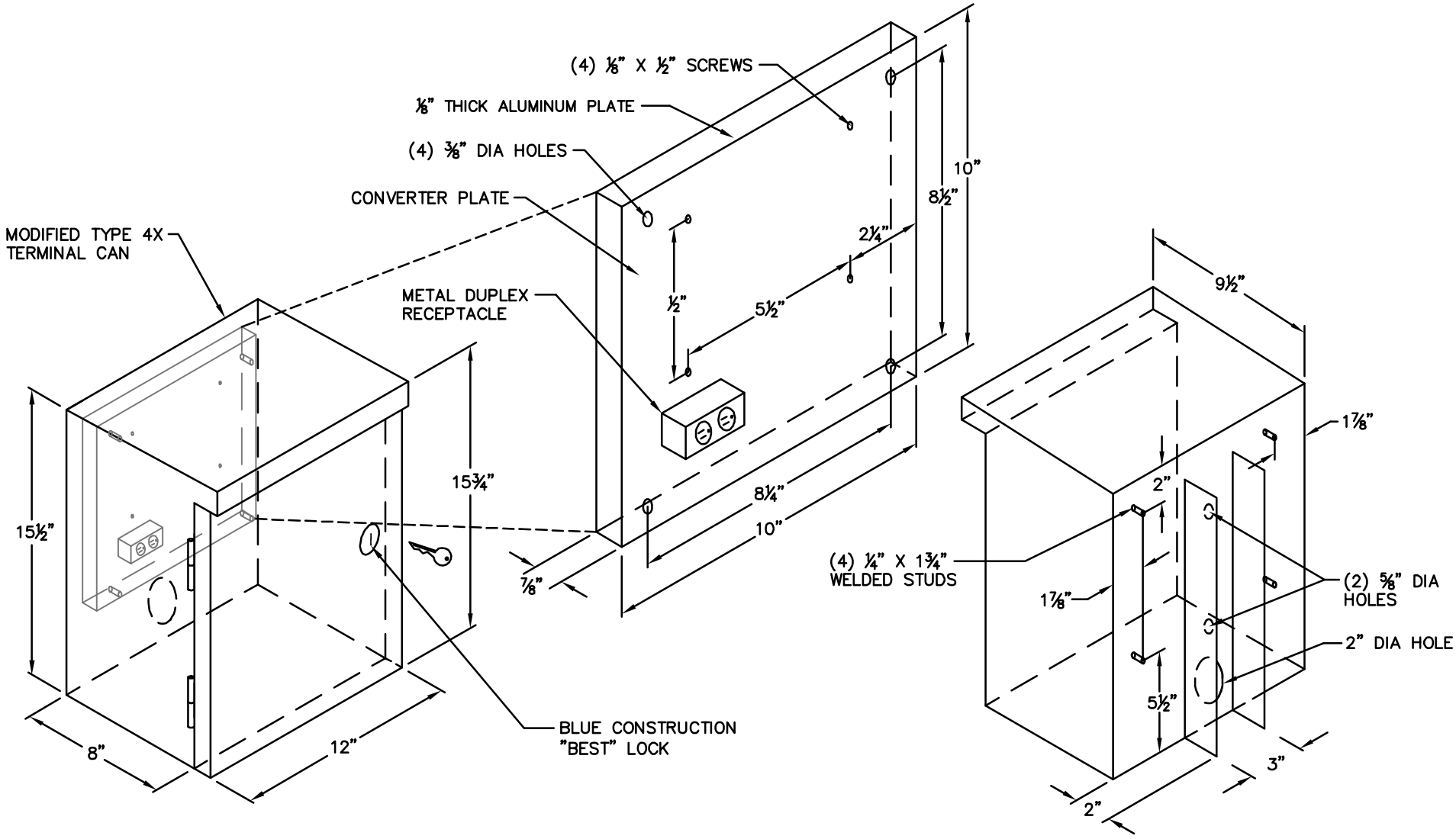

City of Bellevue

VIDEO CONVERTER CABINET DETAIL

DRAWING NUMBER	TSSL-27
SCALE	NONE
REVISION DATE	10/08
DEPARTMENT	TRANS