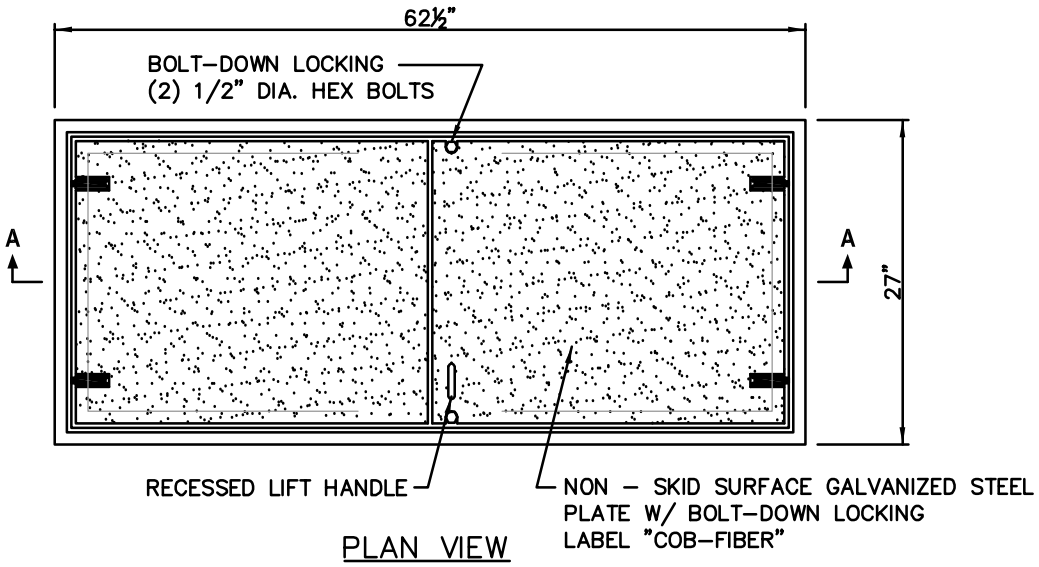

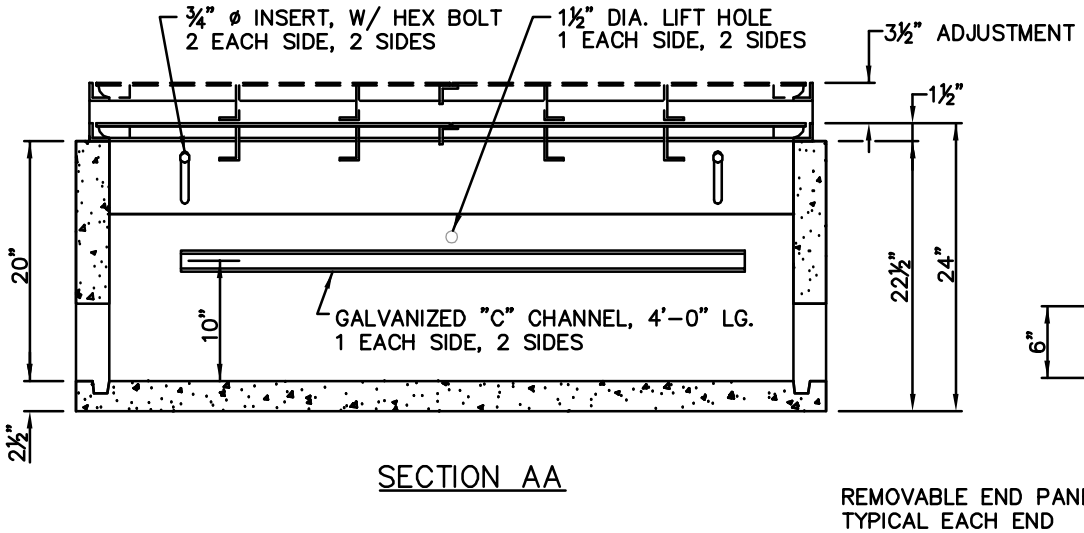

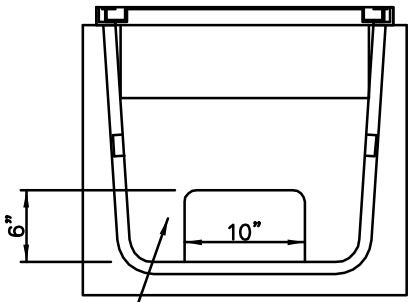

City of Bellevue

FIBER OPTIC VAULT

DRAWING NUMBER	TSSL–8
SCALE	NONE
REVISION DATE	10/08
DEPARTMENT	TRANS