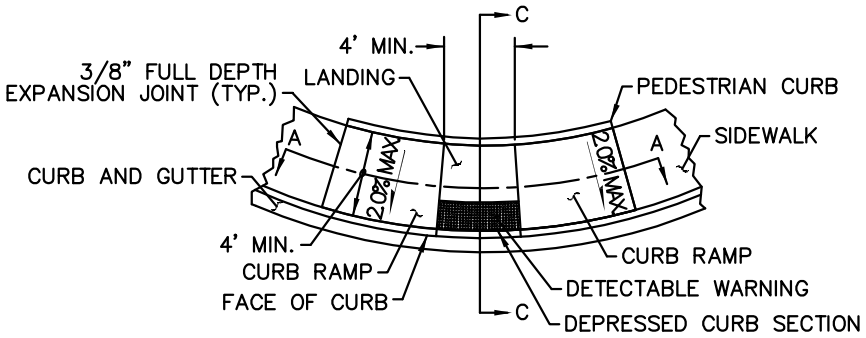

CURB RAMP TYPE 2A

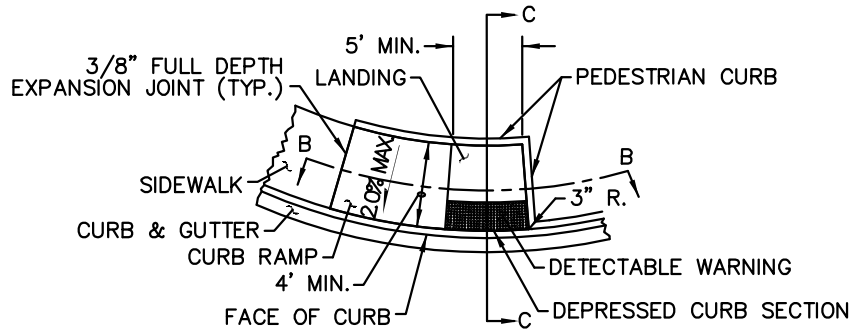

CURB RAMP TYPE 2B

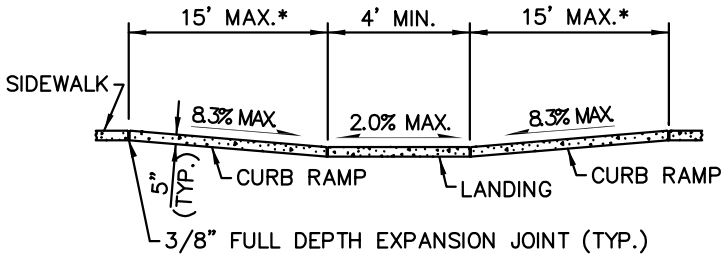

SECTION A–A

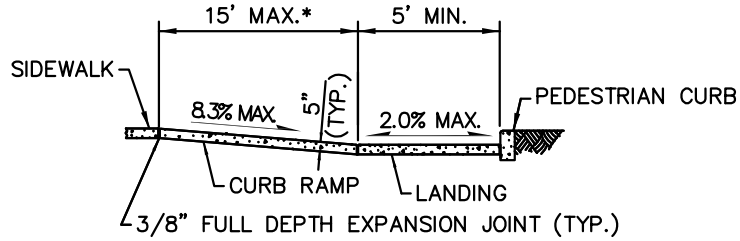

SECTION B–B

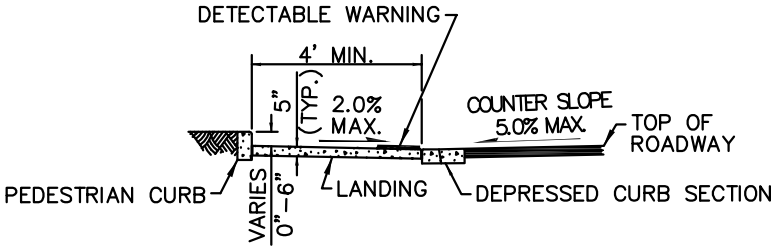

SECTION C–C

*RUNNING SLOPE OF THE CURB RAMP SHALL BE 8.3% MAXIMUM BUT SHALL NOT REQUIRE THE RAMP LENGTH TO EXCEED 15FT AS MEASURED RADIALLY AT BACK OF RAMP.

LEGEND

SLOPE IN EITHER DIRECTION

PAY LIMIT (CITY–FUNDED PROJECTS)

NOTE: SEE TE–12A FOR CURB RAMP CONSTRUCTION NOTES

City of Bellevue

PARALLEL CEMENT CONCRETE CURB RAMP (TYPE 2)

DRAWING NUMBER	TE–12C
SCALE	NONE
REVISION DATE	01/15
DEPARTMENT	TRANS