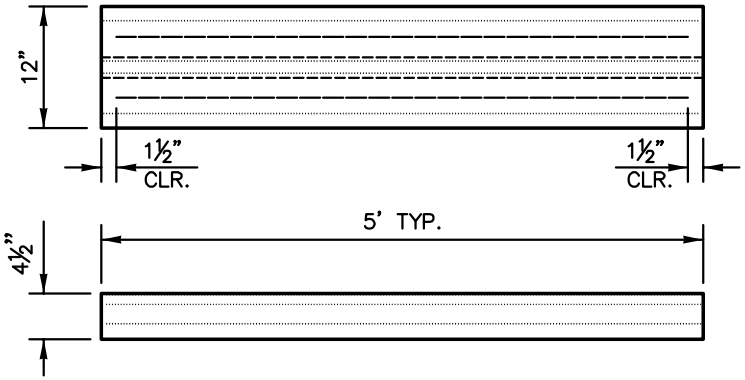


DUAL SLOPED BLOCK

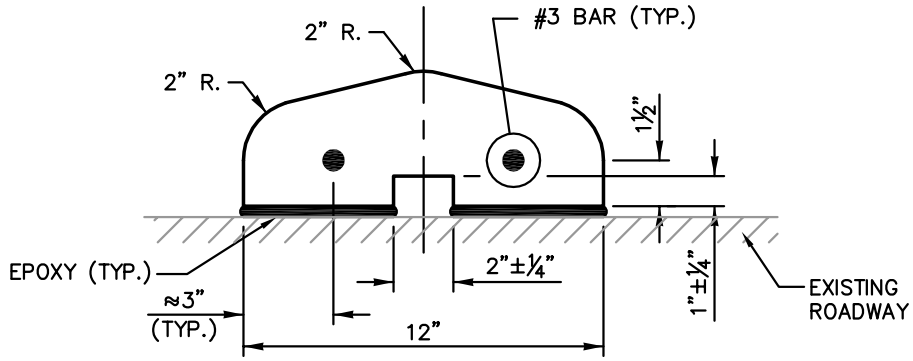


SECTION

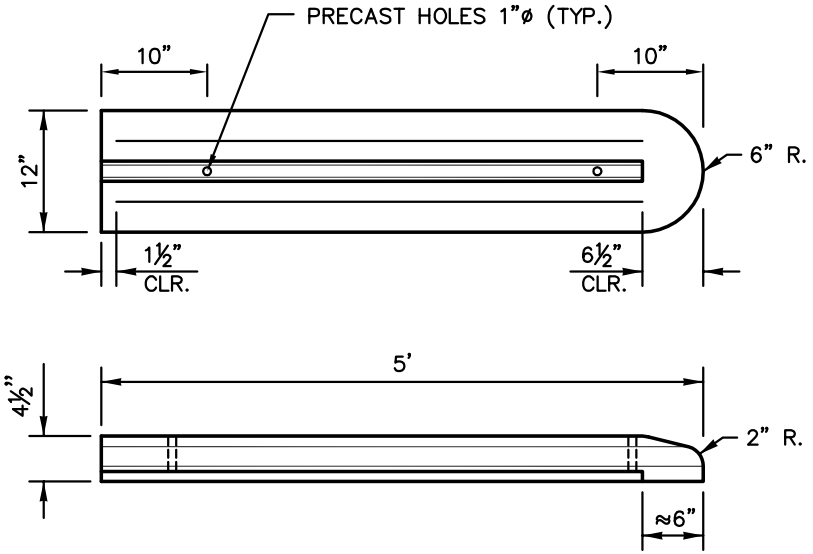


NOSING BLOCK

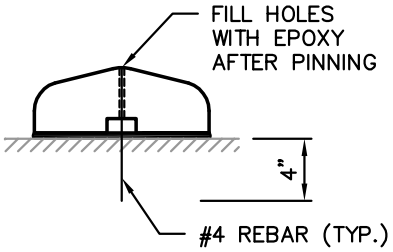


PINNING SECTION

## NOTES:

1. 5' LONG STANDARD SECTIONS SHALL BE USED EXCLUSIVELY, EXCEPT TO ADJUST FOR FINAL LENGTH. NOSING BLOCK SHALL BE 5' LONG, NO EXCEPTIONS.
2. NOSING SHALL HAVE HOLES PRECAST AS SHOWN.
3. PRECAST TRAFFIC CURB SHALL BE INSTALLED WITH AN EAS-60 TWO PART EPOXY. SEE COB SPECIFICATION SECTION 8-09.
4. EPOXY SHALL BE PLACED UNDER THE BEARING SURFACE OF THE PRECAST TRAFFIC CURB.
5. APPLY SUFFICIENT EPOXY TO ENSURE SQUEEZE-OUT OF 50% PER EACH SIDE OF EACH CURB SECTION.

City of Bellevue

# PRECAST CONCRETE DUAL FACED SLOPED MOUNTABLE CURB

| | |
|---|---|
| DRAWING NUMBER | TE-9C |
| SCALE | NONE |
| REVISION DATE | 03/15 |
| DEPARTMENT | TRANS |