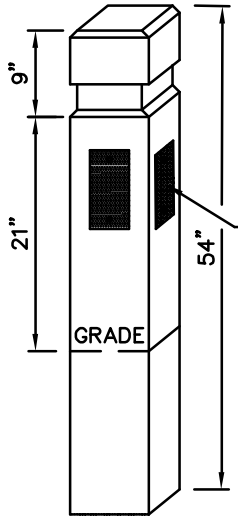

FIXED BOLLARD

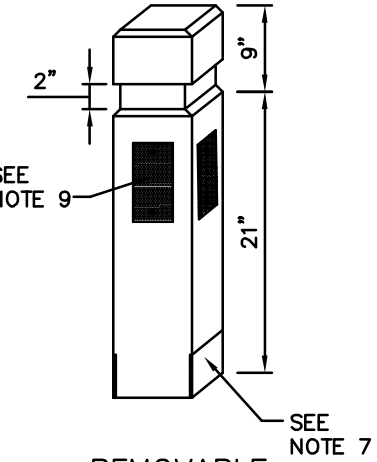

REMOVABLE BOLLARD

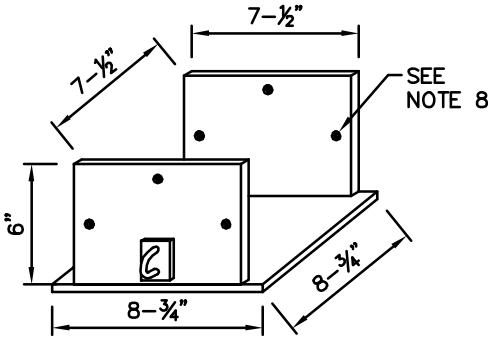

SLIDE-THROUGH POST BRACKET
(FOR REMOVABLE BOLLARD)

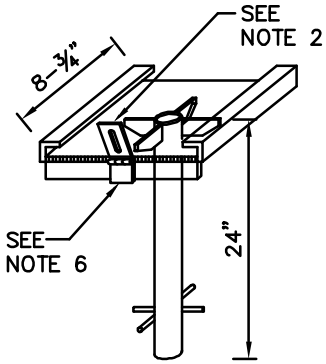

2" SCHEDULE 40
GALVANIZE PIPE
(FOR SUPPORT PLATE)

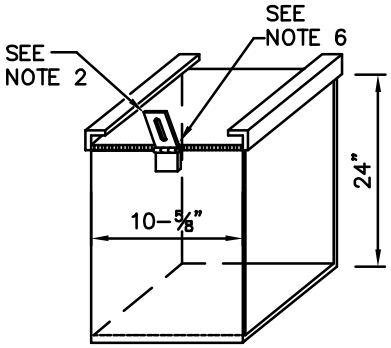

GALVANIZED STEEL PLATE
(FOR SUPPORT PLATE)

ALTERNATE BRACKET SUPPORT
(FOR REMOVABLE BOLLARD)

NOTES

1. ALL PLATE MATERIALS SHALL BE ⅜" GALVANIZED STEEL.
2. LOCKING HINGE SHALL BE HEAVY DUTY CLASP. PROVIDE ADEQUATE CLEARANCE BETWEEN PAVEMENT & CLASP TO ALLOW CLASP TO LIE FLAT WHEN OPEN.
3. BOLLARD SHALL BE MANUFACTURED FROM 8" X 8" DOUGLAS FIR #2 OR BETTER AND PRESSURE-TREATED WITH LP-22.
4. REMOVABLE BOLLARD INSTALLATION: PIPE BASES SHALL BE SET IN A 12" DIAMETER HOLE, 32" DEEP; PLATE BASES SHALL BE SET IN A HOLE WITH 2" OF CLEARANCE ON ALL SIDES AND BOTH SHALL BE BACKFILLED WITH CONCRETE. LOCK HASP SHALL FACE THE STREET.
5. FIXED BOLLARD INSTALLATION: FIXED BOLLARDS SHALL BE SET IN A 16" DIAMETER HOLE, 24" DEEP, AND BACKFILLED WITH CONCRETE.
6. ¼" WELD (BOTH SIDES) SHALL BE USED TO MOUNT CLASP.
7. REMOVABLE BOLLARD BASE BRACKET SHALL BE INCISED ¼" TO FIT BOLLARD BASE.
8. FOR REMOVABLE BOLLARD SLIDE THROUGH POST BRACKET, THREE HOLES SHALL BE DRILLED FOR ½" x 1.5" MACHINE SCREWS (STAINLESS STEEL) AS SHOWN.
9. FOR BOLLARD REFLECTIVITY WHITE HIGH INTENSITY 4"x8" DELINEATORS, ZUMAR OR APPROVED EQUAL, SHALL BE INSTALLED ON ALL SIDES OF THE BOLLARD AND FASTENED WITH STAINLESS STEEL LAG SCREWS.
10. DELINEATORS SHALL BE ATTACHED TO ALL BOLLARDS THAT ARE LOCATED WITHIN THE CITY OF BELLEVUE BICYCLE SYSTEM (PER THE BELLEVUE PEDESTRIAN AND BICYCLE TRANSPORTATION PLAN, 2009) OR AS SPECIFIED BY THE ENGINEER.

City of Bellevue

REMOVABLE AND FIXED BOLLARD

DRAWING NUMBER	DEV-14
SCALE	NONE
REVISION DATE	01/14
DEPARTMENT	TRANS