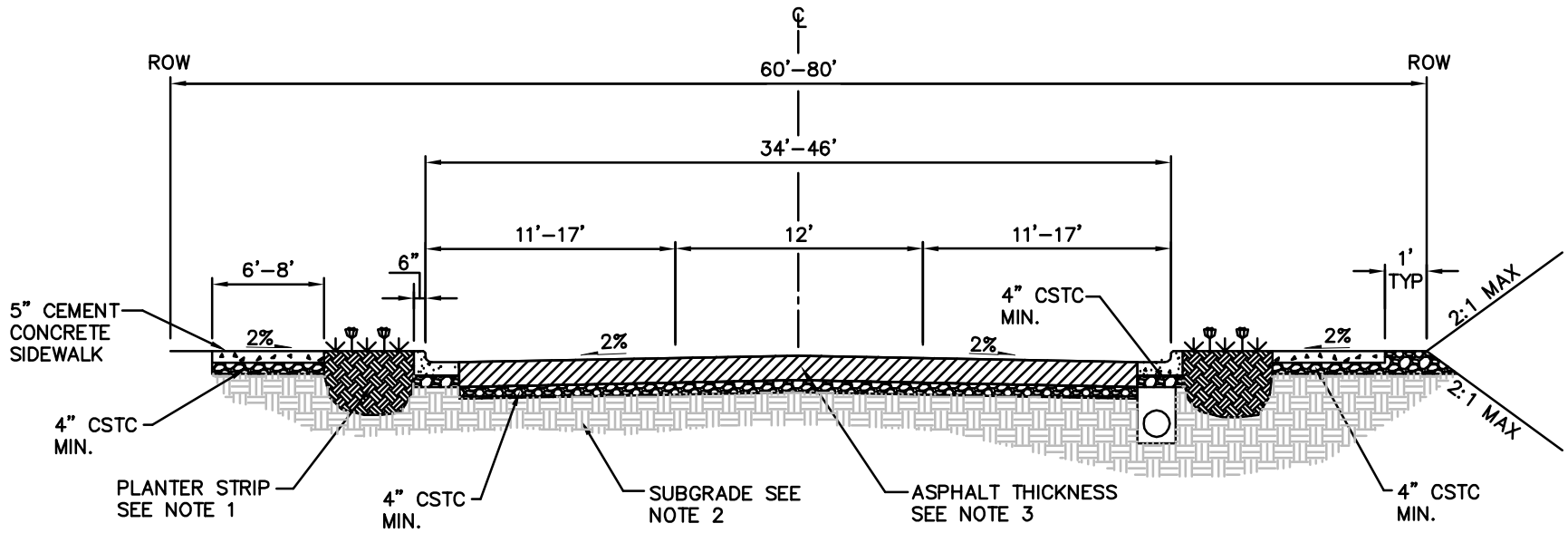

NOTES

1. LANDSCAPED PLANTER STRIP REQUIREMENTS (WIDTH, LANDSCAPE TYPE, MAINTENANCE, ETC.) WILL BE SPECIFIED BY THE ENGINEER. SEE STD. DWG. ROW–9 FOR ASPHALT DETAIL ADJACENT TO PLANTER STRIP.

2. REQUIRED SUBGRADE MATERIALS (GRAVEL BORROW, ETC.) AND THICKNESS WILL BE SPECIFIED BY THE ENGINEER. A GEOTECHNICAL REPORT/SOIL ANALYSIS MAY BE REQUIRED.

3. MINIMUM PAVEMENT THICKNESS SHALL BE 10 INCHES OF HOT MIX ASPHALT PLACED IN THE FOLLOWING COURSES TO CONFORM TO WSDOT STANDARD SPECIFICATION 5–04.3(9): 2 INCHES OF HOT MIX ASPHALT CLASS ½" PG 64–22 WEARING COURSE, OVER TWO 4 INCH LIFTS OF HOT MIX ASPHALT CLASS ½" OR 1" PG 64–22. A GEOTECHNICAL REPORT/SOIL ANALYSIS MAY BE REQUIRED BY THE ENGINEER, AND ADDITIONAL PAVEMENT THICKNESS MAY BE REQUIRED.

4. RIGHT–OF–WAY, SIDEWALK AND TRAVEL LANE WIDTHS SHOWN ARE TYPICAL RANGES. REQUIRED WIDTHS WILL BE SPECIFIED BY THE ENGINEER.

5. ONE FOOT SETBACK DISTANCE REQUIRED FROM ALL SLOPED AREAS AS SHOWN.

City of Bellevue

TYPICAL PUBLIC STREET

DRAWING NUMBER	DEV–9
SCALE	NONE
REVISION DATE	01/14
DEPARTMENT	TRANS