DEVELOPMENT SERVICES DEPARTMENT
ENVIRONMENTAL COORDINATOR
450 110th Ave NE., P.O. BOX 90012
BELLEVUE, WA 98009-9012

OPTIONAL DETERMINATION OF NON-SIGNIFICANCE (DNS) NOTICE MATERIALS

The attached materials are being sent to you pursuant to the requirements for the Optional DNS Process (WAC 197-11-355). A DNS on the attached proposal is likely. This may be the only opportunity to comment on environmental impacts of the proposal. Mitigation measures from standard codes will apply. Project review may require mitigation regardless of whether an EIS is prepared. A copy of the subsequent threshold determination for this proposal may be obtained upon request.

File No. 16-129661-LB & 16-129643-LO

Project Name/Address: Midlakes Pump Station 12525 NE Spring Blvd

Planner: David Wong

Phone Number: 425-452-4282

Minimum Comment Period: 6/16/2016

Materials included in this Notice:

☒ Blue Bulletin
☒ Checklist
☒ Vicinity Map
☒ Plans
☐ Other:

OTHERS TO RECEIVE THIS DOCUMENT:
☒ State Department of Fish and Wildlife / Sterwart.Reinbold@dfw.gov; Christa.Heller@dfw.wa.gov;
☐ State Department of Ecology, Shoreline Planner N.W. Region / Jobu461@ecy.wa.gov; sepaunit@ecy.wa.gov
☐ Army Corps of Engineers Susan.M.Powell@nws02.usace.army.mil
☐ Attorney General ecyolyef@atg.wa.gov
☒ Muckleshoot Indian Tribe Karen.Walter@muckleshoot.nsn.us; Fisheries.fileroom@muckleshoot.nsn.us

SEPA Checklist Reviewed By:
David Wong on 5/31/2016

City of Bellevue, WA

Midlakes Pump Station Capacity Improvements

SEPA Environmental Checklist

April 2016

DW

ENVIRONMENTAL CHECKLIST 1

A. BACKGROUND 1

B. ENVIRONMENTAL ELEMENTS 4
1. Earth 4
2. Air 7
3. Water 8
4. Plants 11
5. Animals 12
6. Energy and Natural Resources 13
7. Environmental Health 14
8. Land and Shoreline Use 17
9. Housing 19
10. Aesthetics 20
11. Light and Glare 21
12. Recreation 21
13. Historic and Cultural Preservation 22
14. Transportation 24
15. Public Services 25
16. Utilities 26

C. SIGNATURE 27

D. REFERENCES AND BIBLIOGRAPHY 28

E. FIGURES 31

Figure 1: Midlakes Pump Station Capacity Improvements Site Map

Attachment A: Preliminary Design Plans

DW

ENVIRONMENTAL CHECKLIST

A. BACKGROUND

1. Name of the proposed project:

Midlakes Pump Station Capacity Improvements

2. Applicant:

City of Bellevue
450 110th Ave. NE
P.O. Box 90012
Bellevue, WA 98009

3. Address and telephone number of applicant and contact person:

Vanaja S. Rajah, P.E., Senior Utilities Engineer
Utilities Department
City of Bellevue
450 110th Ave. NE
P.O. Box 90012
Bellevue, WA 98009

Phone: 425-452-4881
Email: vrajah@Bellevuewa.gov

4. Date checklist prepared:

April 2016

5. Agency requesting checklist:

City of Bellevue
Development Services Department
450 110th Ave. NE
P.O. Box 90012
Bellevue, WA 98009

DW

6. Proposed timing or schedule (including phasing, if applicable):

Construction of the facilities is scheduled to occur in 2016 and would take approximately 11 to 13 months.

7. Plans for future additions, expansion, or further activity related to or connected with this proposal:

The project will provide all necessary improvements; there are no plans for future activity related to this project. The pump station has been sited and designed to accommodate redevelopment within the project area. Redevelopment may include new roadways, the future East Link Light Rail, daylighting a portion of the West Tributary of Kelsey Creek, the future development of the parcel as a park, and residential and commercial development in the project vicinity.

8. Environmental information that has been prepared, or will be prepared, directly related to this project:

Documents that have been prepared related to this project include:

- Basis of Design Report Pump Station Replacement (MWH, 2015a)
- Draft Midlakes Pump Station Replacement Geotechnical Engineering Services Memorandum (GeoEngineers, 2015)
- Preliminary Landscape Plan (MWH, 2015b)
- Construction Stormwater Pollution Prevention Plan (CSWPPP) (MWH, 2015c)

9. Applications that are pending for governmental approvals or other projects directly affecting the property covered by the proposal:

There are no pending governmental approvals or other projects that would directly affect this project or the property covered by the proposal. The capacity of the pump station is being increased to accommodate increased wastewater flows anticipated with the Bel-Red re-zoning.

10. List of governmental approvals or permits that will be needed for this proposal:

The following permits/approvals may be required for this project:

- Hydraulic Project Approval (HPA), Washington State Department of Fish and Wildlife (WDFW)
- Clearing and Grading Permit; City of Bellevue
- Building Permit, City of Bellevue

DW

- Demolition Permit, City of Bellevue
- Right of Way Street Use Permit, City of Bellevue
- Conditional Use Approval; City of Bellevue
- Critical Areas Land Use Permit, City of Bellevue
- Land Use Exemption, City of Bellevue

11. Brief, complete description of the proposal, including the proposed uses and the size of the project and site:

The proposal consists of replacement facilities for the existing Midlakes Pump Station in Bellevue. The existing pump station has a capacity of 800 gallons per minute (gpm) and will be replaced with a pump station with a capacity of 1,700 gpm. The additional capacity is required to accommodate the increased wastewater flow associated with the Bel-Red corridor re-zoning.

The project includes a new pump station, a control building and standby generator located west of the existing pump station in the southwest corner of the site (Figure 1, and Sheet C-4A). Pump station facilities would be below ground with a wet well (37 feet deep and 12 feet in diameter) equipped with three submersible pumps connected to a flow meter by three 8-inch force mains. A one story control building (approximately 270 square feet) would be located north of the pump station. A diesel-powered backup generator would be located to the east of the control building and would be housed in a sound-attenuation and weather-protective enclosure.

A new 12-foot wide paved road with a 25-foot wide truck turnaround would access the pump station from the north. Wastewater would be routed to the new pump station through a new approximately 500-foot long 15-inch PVC gravity line. A new section of force main would be constructed to connect the new pump station to the existing force main. Additional sanitary sewer and storm drain pipelines on the site will be relocated by Sound Transit prior to construction of this project to accommodate the proposed light rail project. The locations of the relocated pipelines are shown on Sheet C-5 in Attachment A.

A portion of the West Tributary of Kelsey Creek currently flows through a 42-inch storm drain adjacent to the existing Midlakes pump station. The City of Bellevue plans to daylight this portion of the stream in the future as a separate project. The daylighted stream would become part of a proposed park located north of the existing pump station. The proposed new force main would be located over the existing 42-inch stormdrain.

The existing pump station would remain operational during construction and will be removed when construction is complete and the new pump station is operational. When the new pump station is complete, the existing pump station wetwell would be used as a manhole. The general project area is proposed for

DW

development as a park and includes the future daylighting of a portion of the West Tributary to Kelsey Creek (Figure 1).

12. Location of the proposal, including street address, if any, and section, township and range; legal description, site plan; vicinity map, and topographical map, if reasonably available:

The proposed pump station would be located in the City of Bellevue on a city-owned parcel located at 1401 130th Avenue NE, near the intersection of 124th Avenue NE and Bel-Red Road (Figure 1).

The project is located in the southeast quarter of Section 28, Township 25 North, Range 5 East, Willamette Meridian. 12525 NE Spring Blvd

B. ENVIRONMENTAL ELEMENTS

1. Earth

a. General description of the site (underline):

flat, rolling, hilly, steep slopes (on right-of-way on the south parcel boundary), mountainous, other

b. What is the steepest slope on the site (approximate percent slope)?

The site is located in a predominantly flat area. Steep slopes are located to the south and west of the proposed pump station location. The slope is approximately 70 percent, with one location with a slope of 110 percent. The vertical height of the slope varies from about 10 to 15 feet and is vegetated with grass and brush (GeoEngineers, 2015).

The City of Bellevue designates slopes greater than 40 percent with a rise of at least 10 feet and an area greater than 1,000 square feet as critical areas (Bellevue City Code [BCC] 20.25H.120).

c. What general types of soils are found on the site (for example clay, sand, gravel, peat, muck)? Specify the classification of agricultural soils and note any agricultural land of long-term commercial significance and whether the proposal results in removing any of these soils.

The Natural Resources Conservation Service (NRCS) (2015) indicates Alderwood gravelly sandy loam, 8 to 15 percent slopes and Everett very gravelly sandy loam, 8 to 15 percent slopes. Geotechnical borings were consistent with mapped soils (GeoEngineers, 2015). There are no agricultural lands or soils in the project area.

DW

d. Are there any surface indications or a history of unstable soils in the immediate vicinity? If so, describe.

There is no indication of a history of unstable soils in the vicinity. The pump station is located in close proximity to the toe of an existing steep slope. Indications of deep seated or shallow slope instability were not observed (GeoEngineers, 2015).

e. Describe the purpose, type, total area, and approximate quantities and total affected area of any filling, excavation, and grading proposed. Indicate the source of the fill.

Approximately 0.5 acre of the site would be excavated and filled for the installation of new pipelines and below grade structures involving approximately 2,750 cubic yards of material. The existing ground surface topography will remain essentially the same with only minor grading to shape the ground surface to facilitate surface drainage. Excavation quantities are estimated as follows:

- Cut = 1,500 cubic yards
- Fill = 1,250 cubic yards

Site clearing will occur over a small portion of the site (approximately 2,000 square feet).

f. Could erosion occur as a result of clearing, construction, or use?

As with all construction projects, erosion could occur as a result of construction activities, particularly earthwork. The potential for erosion would be minimized with adherence to best management practices (BMPs) (refer to question 1.h. below).

g. About what percent of the site will be covered with impervious surfaces after project construction (for example buildings or asphalt)?

The current site has approximately 43,500 square feet of impervious surface area from the existing pump station, structures, and gravel surface. When completed, the new improvements will create a total of approximately 41,200 square feet of impervious surface area (Table 1). The existing site is covered by approximately 82% impervious surface area. The proposed site will be covered by approximately 78% impervious surface area.

DW

Table 1: Impervious Surface Area Summary

Feature Description	Existing Impervious Surface Area (sq feet)	Proposed Impervious Surface Area (sq feet)
Pump Station (including roof)	0	150
Controls Building	0	350
Standby generator	0	200
Onsite Gravel Surface	43,474	36,300
Onsite Pervious Concrete Pavement[1]	0	3,586
Onsite Cement Concrete Pavement (Vault lids & washdown area)	0	635
Miscellaneous Improvements	200	0
Total Impervious Area	**43,474**	**41,222**

[1]Pervious concrete pavement is considered 50% pervious surface.

h. Describe the proposed measures to reduce or control erosion, or other impacts to the earth, if any.

Best management practices (BMPs) are physical, structural, and/or managerial practices that can prevent or reduce the erosion and pollution of water caused by construction activities. The following mitigation measures and BMPs would be incorporated during construction to minimize the potential for erosion:

- Construction of the proposed project, including all staging areas, would be restricted to the project site.
- All debris and spoil material would be transported off-site to an appropriate disposal facility.
- A Construction Stormwater Pollution Prevention Plan (CSWPPP), which includes a Temporary Erosion and Sediment Control (TESC) Plan, would be required to prevent sediment transport from the project site.
- Other erosion control measures would be incorporated, as necessary, in accordance with City of Bellevue requirements.
- Erosion control measures could include use of silt fencing, catch basin inlet protection, stabilized construction entrance, and other measures as specified in the CSWPPP.
- Refueling will take place more than 100 feet from surface waters.

Erosion Control regulated by BCC 23.76

DW

2. Air

a. What types of emissions to the air would result from the proposal during construction, operation and maintenance when the project is completed? If any, generally describe and give approximate quantities, if known.

During construction activities, there may be a small increase in exhaust emissions from construction vehicles and equipment, and a temporary increase in fugitive dust due to sediment removal. This increase in dust would be localized and temporary.

Emissions from construction vehicles, as well as emissions from construction workers' vehicles, would contribute greenhouse gases to the atmosphere during this period.

The wet well would be continuously ventilated by a fan or blower to reduce the potential odors. Therefore, no odors are anticipated. The site is located in an industrial area and the City has received no complaints about odors from the existing pumping station.

Minor emissions will occur from periodic maintenance vehicles and equipment visiting the site. An emergency diesel generator would produce some emissions during periodic testing and if used in an electrical outage.

b. Are there any off-site sources of emissions or odors that may affect your proposal? If so, generally describe.

There are no off-site sources of emissions or odor that would affect the project.

c. Describe proposed measures to reduce or control emissions or other impacts to air, if any.

Measures that could be incorporated during construction to minimize impacts to air quality include:

- Spray exposed soil and storage areas with water during dry periods.
- Remove particulate matter deposited on paved, public roads and sidewalks to reduce mud and dust; sweep and wash streets frequently to reduce emissions.
- Equip construction equipment with appropriate emission controls.
- Comply with the Puget Sound Clean Air Agency (PSCAA) regulations to control odorous emissions so as to prevent undue interference with nearby uses.

DW

No odor control equipment will be installed as part of this project. However, the project will make provisions for installation of a charcoal odor control facility in the future.

3. Water

a. Surface:

1. Is there any surface water body on or in the immediate vicinity of the site (including year-round and seasonal streams, saltwater, lakes, ponds, and wetlands)? If yes, describe type and provide names. If appropriate, state what stream or river it flows into.

The West Tributary of Kelsey Creek flows through a pipe on the project property. A portion of Kelsey Creek flows through a large wetland on the parcel north of the proposed pump station (Figure 1). There are no wetlands present on the project site (City of Bellevue, 2015; USFWS, 2015a).

2. Will the project require any work over, in, or adjacent to (within 200 feet) the described waters? If yes, please describe and attach available plans.

The new pump station would be located approximately 100 feet west of the piped section of West Tributary of Kelsey Creek. The new force main would cross under the piped section of Kelsey Creek in two locations, approximately 5 feet below the piped stream (MWH, 2015). The piped stream section would not be impacted as a result of construction. The piped portion of Kelsey Creek in this area is proposed for future daylighting (shown as Existing 42-inch stormdrain [SD] on Sheet C-5 in Attachment A).

3. Estimate the amount of fill and dredge material that could be placed in or removed from surface water or wetlands and indicate the area of the site that would be affected. Indicate the source of fill materials.

No fill or dredge material would be placed in or removed from surface waters or wetlands.

4. Will the proposal require surface water withdrawals or diversion? Give general description, purpose, and approximate quantities, if known.

No surface water withdrawals or diversions would be required for the proposed project.

DW

5. Does the proposal lie within a 100-year flood plain? If so, note location on the site plan.

According to FEMA's Flood Insurance Rate Map this project is not located in a 100 year flood plain (FEMA, 1995).

6. Does the proposal involve discharges of waste materials to surface waters? If so, describe the type of waste and anticipated volume of discharge.

The proposal would not directly discharge waste materials to surface waters during normal operations. The new pump station would accommodate increased wastewater flows anticipated from the Bel-Red corridor rezoning. Routing the wastewater from the new pump station to the King County regional sewage system for treatment would not change from existing conditions. There is a possibility of the pump station overflowing into an existing stormwater catch basin during and emergency condition and power outage. The overflow would occur only in the event of an emergency situation.

b. Ground

1. Will ground water be withdrawn from a drinking water well for other purposes? If so, give a general description of the well, proposed uses and approximate quantities withdrawn from the well. Will water be discharged to ground water? Give general description, purpose, and approximate quantities if known.

No water would be withdrawn from a drinking water well. The project does not require discharge to groundwater. Dewatering will be required to lower the groundwater level during construction. Dewatering wells or vacuum wellpoints may be required to adequately lower the groundwater around the temporary shoring for the deeper excavation of the wet well construction. Groundwater from dewatering would require disposal to a storm drain or sanitary sewer (GeoEngineers, 2015).

2. Describe waste material that will be discharged into the ground from septic tanks or other sources, if any. Describe the general size of the system, the number of such systems, the number of houses to be served (if applicable), or the number of animals or humans the system(s) is expected to serve.

DW

No waste materials would be discharged into the ground as a result of this project.

c. Water Runoff (including storm water)

1. Describe the source of runoff (including storm water) and method of collection and disposal, if any (including quantities if known). Where will this water flow? Will this water flow into other waters? If so, describe.

The current project site is developed and has approximately 43,474 square feet of impervious surface area from the existing pump station, buildings and gravel surface. When completed, there would be approximately 41,222 square feet of impervious surface. Overall there will be a net decrease of impervious surface. The whole site would generate storm water runoff; the largest sources contributing to runoff would be drainage from the pump station, control building roof, onsite compacted gravel surface and the cement concrete pavement. The majority, and potentially all, of the site runoff will be routed to the existing storm system. Stormwater BMPs are designed per the Bellevue Surface Water Engineering Standards and the 2012 Ecology Stormwater Management Manual.

2. Could waste materials enter ground or surface waters? If so, generally describe.

Runoff from the construction site has the potential to contain sediment and small amounts of equipment-related materials (motor oil, diesel fuel, hydraulic fluid). BMPs such as installing temporary filter fabric in the existing catch basins would be implemented to minimize equipment-related materials and sediment from leaving the site and potentially entering surface and ground waters.

3. Does the proposal alter or otherwise affect drainage patterns in the vicinity of the site? If so, describe.

No, drainage patterns in the vicinity would not be affected by the proposed project.

d. Describe proposed measures to reduce or control surface, ground, runoff water, and drainage pattern impacts, if any.

The project would be constructed in accordance with applicable state and City of Bellevue permits, which will specify a range of BMPs and temporary erosion and sedimentation control (TESC) measures designed

DW

to reduce or control potential surface, ground, or runoff water impacts. BMPs may include installation of catch basin filters and/or other appropriate cover measures. BMPs and TESC measures specific to the site and project would be specified by the City in the construction contract documents, and the construction contractor will be required to implement them.

4. Plants

a. List types of vegetation found on site:

Deciduous trees: none

Evergreen tree: Douglas fir

Shrubs: none

Grass: none

Pasture: none

Crop or grain: none

Orchards, vineyards or other permanent crops: none

Wet soil plants: none

Water plants: none

Other types of vegetation: blackberry

The site is mostly graveled with limited weedy vegetation. The south property boundary is a steep slope with Douglas fir trees on the top and blackberry vines on the slope.

b. What kind and amount of vegetation will be removed or altered?

Three tree and weedy vegetation would be removed from the construction areas (Sheet C-4A). The trees on the south property boundary would not be disturbed.

c. List threatened and endangered species or critical habitat known to be on or near the site.

The project occurs within an urbanized area with no threatened or endangered plant species or critical habitat known to be on or near the site (WDFW, 2015; WDNR, 2015).

d. Describe proposed landscaping, use of native plants, or other measures to preserve or enhance vegetation on site.

Following the completion of construction, the City of Bellevue will landscape in accordance with the requirements outlined in the (BLUC

DW

20.20.520). The landscape plantings will be native trees and shrubs and ground cover plantings. The planting layout will primarily be located along the west edge of the proposed access driveway and restoration plantings at the site of the demolished existing pump station (MWH, 2015b).

e. List all noxious weeds and invasive species known to be on or near the site.

Himalayan blackberry, which is listed as a noxious weed by the Washington State Noxious Weed Control Board, is located on the slopes on the south project boundary.

5. Animals

a. List any birds and animals which have been observed on or near the site or are known to be on or near the site:

Fish: Resident Coastal Cutthroat
Amphibians: frogs and salamanders
Reptiles:
Birds: species adapted to urban areas such as gulls, American crow, rock pigeon chickadee, and American robin
Mammals: species adapted to urban areas such as Norway rat, raccoons, opossums

Habitat on the site is limited by the lack of vegetation except for the trees and shrubs on the south property boundary. However, the wetland area to the north provides habitat for songbirds, small mammals, and amphibians. The West Tributary to Kelsey Creek flows from the wetland to the north along the eastern boundary of property in a pipe. Resident Coastal Cutthroat have been documented both north and south of the property. South of Bel-Red Road (approximately 0.25 mile downstream), the West Tributary to Kelsey Creek is critical habitat for Chinook salmon (USFWS, 2015b; WDFW, 2015).

b. List any threatened and endangered species or critical habitat known to be on or near the site.

There are no listed species on project site; however Chinook salmon have been documented approximately 0.25 mile downstream (USFWS, 2015b; WDFW, 2015).

c. Is the site part of a migratory route? If so, explain.

DW

The project site, along with the entire Puget Sound region, is located within the Pacific Flyway, which is a flight corridor for migrating waterfowl and other birds. The Pacific Flyway extends south from Alaska to Mexico and South America. No portions of the proposed project would interfere with or alter the Pacific Flyway.

d. Proposed measures to preserve or enhance wildlife, if any.

Impacts to wildlife are not anticipated as a result of the project; therefore, measures have not been proposed.

e. List any invasive animal species known to be on or near the site.

Rodents such as rats are likely present in the project area.

6. Energy and Natural Resources

a. What kinds of energy (electric, natural gas, oil, wood, solar) will be used to meet the completed project's energy needs? Describe whether it will be used for heating, manufacturing, etc.

Electrical energy will be needed for the pump station operation. Energy requirements would be greater than existing energy use because the new pump station will have three pumps and greater capacity (800 gpm to 1,700 gpm). The new Control Building will have heating and ventilation equipment which adds some more energy use. The total increase in energy use is estimated to be 80 horsepower (HP). In addition, there would be diesel storage for the emergency generator in the event of a power outage.

b. Would the project affect the potential use of solar energy by adjacent properties? If so, explain.

The project would not require the use of solar energy and would not affect solar energy use by adjacent properties.

c. What kinds of energy conservation features are included in the plans of this proposal? List other proposed measures to reduce or control energy impacts, if any.

The pump station has been designed to be energy efficient by installing pumps that are operating near their best efficiency point and energy efficient LED lights. The pump station would be in compliance with the Washington State Energy Code.

DW

7. Environmental Health

a. Are there any environmental health hazards, including exposure to toxic chemicals, risk of fire and explosion, spills, or hazardous waste that could occur as a result of this proposal? If so, describe.

With any construction project, there is the risk of potential construction related spills or leaks. This project would face similar risks, but all risks would be well within the range of typical construction projects. No toxic chemicals would be used or stored at the construction sites, other than fuels and other construction-related fluids.

(1) Describe any known or possible contamination at the site from present or past land uses.

The Ecology database identifies numerous contaminated sites surrounding the project area, including three sites in the paved area to the north of the existing pump station and fleet storage building (Ecology, 2015). The cleanup process has been completed for all of these sites. No known contaminated sites are located in the areas that will be disturbed as part of construction.

A portion of a building on the site has been determined to contain hazardous materials and will be demolished as part of the project. Abatement of the building will be done by City of Bellevue Parks Department prior to construction of the pump station project.

(2) Describe existing hazardous chemicals/conditions that might affect project development and design. This includes underground hazardous liquids and gas transmission pipelines located within the project area and in the vicinity.

The project consists of replacing an existing wastewater pump station. During construction, there is the possibility for workers to come in contact with untreated wastewater.

(3) Describe any toxic or hazardous chemicals that might be stored, used, or produced during the project's development or construction, or at any time during the operating life of the project.

The standby generator would require diesel fuel. The fuel would be stored in a double-wall sub-base type fuel tank adjacent to the generator. The pump station would not use or produce toxic or hazardous chemicals.

DW

(4) Describe special emergency services that might be required.

Construction and operation of the facilities will comply with all applicable fire codes and Occupational Safety and Health Administration (OSHA) regulations. Special emergency services beyond those currently employed at the site would not be required.

(5) Proposed measures to reduce or control environmental health hazards, if any.

Measures will be developed to reduce the potential for contact with untreated wastewater and ensure worker safety. These will be outlined in the Health and Safety Plan developed for the project. In addition, workers will be required to follow confined space entry requirements as appropriate.

b. Noise

(1) What types of noise exist in the area which may affect your project (for example: traffic, equipment operation, other)?

Vehicular traffic along area roadways and airplane traffic above the site are the major noise sources in the area. Additional light rail service is planned to the north of the project areas. There are no existing sources of noise in the area that would adversely affect the proposal.

(2) What types and levels of noise would be created by or associated with the project on a short-term or long-term basis (for example: traffic, construction, operation, other)?

Construction of the project can be expected to cause short-term noise impacts in areas directly adjacent to construction activity. Noise impacts are only anticipated to occur during the estimated 11 to 13 month construction period. There are no sensitive noise receptors near the pump station location. Construction would occur within the designated hours according to BCC 9.18.040.A.4 and thus no impact would occur.

Since the pump station may be located in a park following future development of the site, Class A Environmental Designation for Noise Abatement (EDNA) will be applied for both the pump station and the adjoining site (BCC 9.18.030). This limits the noise level to 55 dBA and to 45 dBA between 10 pm and 7 am.

The proposed pumps are rated for noise emission of approximately 80 dBA at 3 feet. The pumps would be located at the bottom of the

wetwell, over 30 feet below grade and submerged when operating. Therefore the noise level near the property line is expected to be below the 55 dBA limit. The noise level of the pumps would be verified during design and accommodations would be provided to reduce noise if needed.

The exhaust fan or blower in the controls building would be another source of noise with an expected sound level of about 80 dBA. The controls building would be designed to reduce the noise levels to acceptable levels.

The pump would include a backup generator. Noise from stationary generators is exempt under BCC 9.18.020 when operated during power outages. Generators are not allowed to exceed a sound level of 75 dBA at the property line. The stationary emergency generator would be installed next to the controls building and would be enclosed with weather protection and sound attenuation.

(3) Describe proposed measures to reduce or control noise impacts, if any.

To reduce noise impacts during construction, contractors would comply with all local and state noise regulations. Contractors may also implement the following measures to reduce or control noise impacts:

DW

- Per BCC 9.18, the hours of construction will be between 7am – 6pm, Monday – Friday; 9am – 6pm Saturday; and no construction site noise is permitted Sunday or legal holidays.
- Minimize the idling time of equipment and vehicle operation.
- Operate equipment only during hours approved by the City of Bellevue.
- Use well-maintained and properly-functioning equipment and vehicles.
- Locate stationary equipment away from receiving properties.

Measures to reduce noise from the pumps and the emergency generator are described in (2) above. Noise regulated by BCC 9.18

8. Land and Shoreline Use

a. What is the current use of the site and adjacent properties? Will the proposal affect current land uses on nearby or adjacent properties? If so, describe.

The property is owned by the City Bellevue and is currently used for a pump station and a maintenance yard. A building on the property is currently used for storage of City fleet vehicles. The adjacent properties are commercial, mostly warehouse facilities. The project will not affect the nearby or adjacent properties.

b. Has the project site been used as working farmland or working forest lands? If so, describe. How much agricultural or forest land of long-term commercial significance will be converted to other uses as a result of the proposal, if any? If resource lands have not been designated, how many acres in farmland or forest land tax status will be converted to nonfarm or nonforest use?

DW

The site is developed with a gravel lot, and has not been used for agriculture or working forest.

(1) **Will the proposal affect or be affected by surrounding working farm or forest land normal business operations, such as oversize equipment access, the application of pesticides, tilling, or harvesting? If so, how?**

There are no working farm or forest land businesses in the project vicinity.

c. Describe any structures on the site.

The existing pump station is located along the south property line of the site. There pump station is underground with an above grade control panel. A warehouse is located on the property to the north of the proposed pump station location. The one-story prefab steel building was built in 1968. It is 7,268 square feet in area and 14 feet high. It is used by the City of Bellevue for fleet storage.

d. Will any structures be demolished? If so, what?

The existing pump station, with the exception of the existing wet well, would be demolished and repurposed as a manhole.

e. What is the current zoning classification of the site?

The proposed site is currently zoned Bel-Red Office Residential (BR-OR) (City of Bellevue, 2015).

f. What is the current comprehensive plan designation of the site?

In the City's Comprehensive Plan, this site is mapped as a Bel-Red Office Residential (City of Bellevue, 2015).

g. If applicable, what is the current shoreline master program designation of the site?

The site is not within a regulated shoreline.

h. Has any part of the site been classified as a critical area? If so, specify.

The slopes on the south boundary of the property are designated as critical areas because the slope is greater than 40 percent. As noted above the slope along the south property boundary is generally 70%.

DW

West Tributary of Kelsey Creek flows through a wetland to the north of the site. The project will not impact the wetland.

i. Approximately how many people would reside or work in the completed project?

No people would reside or work in the completed project. Workers would visit the site to perform regular maintenance and checks.

j. Approximately how many people would the completed project displace?

The completed project would not displace any people.

k. Describe proposed measures to avoid or reduce displacement impacts, if any.

Displacement would not occur as a result of this project; therefore, no mitigation measures are required.

l. Describe proposed measures to ensure the proposal is compatible with existing and projected land uses and plans, if any.

The proposed pump station would replace an existing pump station and thus would not change the existing land use. The facilities are consistent with City's existing and projected land use requirements and plans for the site. An Administrative Conditional Use Approval will be needed from the City of Bellevue.

As described in Section A.11, the City plans to daylight the piped section of Kelsey Creek that runs under the eastern portion of the property. The area would be converted to a park. The pump station facilities are being designed to accommodate these future plans, in coordination with other City of Bellevue Departments, including Planning.

m. Describe proposed measures to ensure the proposal is compatible with nearby agricultural and forest lands of long-term commercial significance, if any.

There are no agricultural or forest lands in the project vicinity.

9. Housing

a. Approximately how many units would be provided, if any? Indicate whether high, middle, or low-income housing.

DW

No housing units will be provided by this project.

b. Approximately how many units, if any, would be eliminated? Indicate whether high, middle, or low-income housing.

No housing units will be eliminated by this project.

c. Describe proposed measures to reduce or control housing impacts, if any.

No housing impacts would occur, so no mitigation is required.

10. Aesthetics

a. What is the tallest height of any of the proposed structure(s), not including antennas? What is the principal exterior building material(s) proposed?

The tallest structure would be the controls building at 12 feet high. The exterior of the building would be concrete masonry with a metal roof. The generator would be enclosed in a metal sound-attenuation and weather-protective cover. Visual screening of the generator enclosure would be included in the design of the future park.

b. What views in the immediate vicinity would be altered or obstructed?

Existing views in the vicinity are of neighboring commercial properties. The new pump station would be located in the southwest corner of the property below the steep slopes on the property boundaries and would not obstruct views. The control building would be similar to others in the area, so views would not be substantially altered.

The project will be screened along the west and south sides, and the existing warehouse screens the pump station to the east. When this building is eventually demolished, City of Bellevue Parks or Utilities Departments will install screening around the pump station at that time. When Kelsey Creek is daylighted and a park is established on the site, the controls building and generator would be screened from visibility from the park.

c. Describe proposed measures to reduce aesthetic impacts, if any.

Aesthetic impacts are not anticipated as a result of the project. Park design and the future West Tributary of Kelsey Creek daylighting would include measures to screen the pump station facilities from view from the park.

DW

11. Light and Glare

a. What type of light and glare will the proposal produce? What time of day would it mainly occur?

Exterior lighting would consist of an LED light over the door of the Control Building, which would be on constantly.

b. Could light or glare from the finished project be a safety hazard or interfere with views?

The project would not generate light or glare that could interfere with views.

c. What existing off-site sources of light or glare may affect your proposal?

There are no existing sources of light or glare that would impact the project.

d. Describe the proposed measures to reduce or control light and glare impacts, if any.

Light and glare impacts are not anticipated; therefore, mitigation measures are not required.

12. Recreation

a. What designated and informal recreational opportunities are in the immediate vicinity?

There are no designated or informal recreational opportunities in the immediate vicinity.

b. Would the proposed project displace any existing recreational uses? If so, describe.

The proposed project would not displace any existing recreational uses.

c. Describe proposed measures to reduce or control impacts on recreation, including recreational opportunities to be provided by the project or applicant.

No measures to control impacts on recreation have been proposed because no impacts are anticipated. The City plans to develop a park on the site when Kelsey Creek is daylighted. The pump station is being designed to

DW

be compatible with a future park but coordinating with City of Bellevue Parks Department.

13. Historic and Cultural Preservation

a. Are there any buildings, structures, or sites located on or near the site that are over 45 years old or listed in or eligible for listing in national, state, or local preservation registers located on or near the site? If so, specifically describe.

A review of historic registers indicates that there are no properties listed on or determined eligible for listing on the Nation Register of Historic Places or Washington Heritage Register within or adjacent to the project area (DAHP, 2015a). There are no King County Landmarks on or near the project area. The City of Bellevue does not have a local preservation register.

There are three buildings on the property that will be over 45 years old at the anticipated time of construction (2016). They are two connected pre-fabricated steel-frame warehouses built in 1968 and 1970 and an office building built in 1971. It is assumed that the existing pump station was installed in the 1960s and is over 45 years old.

The three buildings have not been evaluated for listing on the national, state, or local preservation registers but based on age alone could qualify as historic. Architecturally, there is no indication that these buildings would qualify for listing on a historic register. Construction of the new pump station would result indemolition of these buildings.

b. Are there any landmarks, features, or other evidence of Indian or historic use or occupation. This may include human burials or old cemeteries. Are there any material evidence artifacts or areas of cultural importance on or near the site? Please list any professional studies conducted at the site to identify such resources.

The project area is located between Lake Washington and Lake Sammamish, along Kelsey Creek, approximately 3.5 miles inland from both lakes. No Native American ethnographic place names were recorded on or near the project area, however many were recorded along the shores of both lakes (Hilbert et al., 2001). This area is in the traditional territory of the Lakes Duwamish and Sammamish peoples, whose descendants are members of the Snoqualmie Tribe, Tulalip Tribes, Suquamish Tribe, and Muckleshoot Indian Tribe.

There is one recorded archaeological site within one mile of the project area, the Bellevue Pioneer Cemetery (45-KI-854). It is located

DW

approximately 0.5 mile directly west of the project area. It was in use between c.1892-1941; many, but not all, graves have been relocated to other cemeteries (DAHP, 2015b). The pump station relocation is not expected to impact this site. Two previous professional cultural resource studies have been conducted at the project area in relation to planned development by Sound Transit; neither identified any buried cultural resources (Hoyt et al., 2015; ESA, 2015).

During the first half of the 20th century the project area appears to have been subject to agricultural use (King County 1954; King County 1965; Pacific Aerial Surveys, 1936). Industrial development of the area began in the 1960s when a commercial warehouse was built on the property in 1968 and expanded in 1970 (USGS 1968; USGS 1973). An office building was built in 1971.

The Department of Archaeology and Historic Preservation's (DAHP) Statewide Predictive Model classifies the project area as "Moderate Risk – Survey Recommended" and "High Risk – Survey Highly Advised" with the southwest corner classified as "Moderately Low Risk – Survey Contingent Upon Project Parameters" (DAHP, 2010). Review of historic maps, aerial photographs, and published Native American ethnographic studies further support that there is a moderate to high probability for encountering cultural resources in the project area (Anderson Map Company, 1907; Hilbert et al., 2001; King County, 1954; King County, 1965; Kroll Map Company, 1912; Kroll Map Company, 1926; Metsker Map Company, 1936; Pacific Aerial Surveys, 1936; USGS, 1950; USGS, 1968; USGS, 1973; US Surveyor General 1870).

c. Describe the methods used to assess the potential impacts to cultural and historic resources on or near the project site. Examples include consultation with tribes and the Department of Archaeology and Historic Preservation, archaeological surveys, historic maps, GIS data, etc.

As cited in response to questions 13a and 13b above, the following types of documents were reviewed in order to identify any potential cultural resources in the project vicinity: the DAHP for any recorded cultural resources, cemeteries, national, state, or local register-listed historic properties, and previous studies on or near the project area; DAHP's Statewide Predicative Model; historic maps of the project area dated 1870, 1907, 1912, 1926, 1936, 1950, 1968,1973, aerial photographs of the project area taken 1937, 1954, 1965; and ethnographic studies.

d. Describe proposed measures to avoid, minimize, or compensate for loss, changes to, and disturbance to resources. Please include plans for the above and any permits that may be required.

DW

Prior to demolition, a cultural resources assessment will be conducted to record the three existing historic-aged buildings. Based on the recent findings of sub-surface testing done at this location for Sound Transit work, subsurface testing for the Midlakes Pump Station Project is not recommended (Hoyt et al., 2015; ESA, 2015). The cultural resources assessment will include a project-specific Inadvertent Discovery Plan (IDP). No cultural resources permits are required for this project.

Should cultural resources be inadvertently identified during the project, the City will comply with state laws requiring the protection of cultural resources and human remains (RCW 27.53, RCW 27.44, RCW 68.50, and RCW 68.60). The City will temporarily halt work in the immediate vicinity of the identified resources and notify the City, DAHP, and Affected Tribes to negotiate mitigation and/or avoidance measures.

14. Transportation

a. Identify public streets and highways serving the site or affected geographic area, and describe proposed access to the existing street system. Show on site plans, if any.

The proposed project is north of Bel-Red Road between 124th Avenue NE and 130th Avenue NE. Access to the property is from 124th Avenue NE. The existing road infrastructure would not be altered as a result of this project, but a new paved access road would be constructed on City property to the pump station (Sheet C-4A).

b. Is the site or affected geographic area currently served by public transit? If so, generally describe. If not, what is the approximate distance to the nearest transit stop?

Metro Transit Route 246 runs east and west along Bel-Red Road. The nearest bus stop is on Bel-Red Road.

c. How many additional parking spaces would the completed project or nonproject proposal have? How many would the project or proposal eliminate?

No change in parking spaces is planned as a result of this project.

d. Will the proposal require any new improvements to existing roads, streets, pedestrian, bicycle or state transportation facilities, not including driveways? If so, generally describe (indicate whether public or private).

DW

No improvements to existing roads or streets are planned as a result of this project. A new access road will be constructed.

e. Will the project or proposal use (or occur in the immediate vicinity of) water, rail, or air transportation? If so, generally describe.

The project would not use, nor interfere with, water, rail, or air transportation.

f. How many vehicular trips per day would be generated by the completed project? If known, indicate when peak volumes would occur and what percentage of the volume would be from trucks (such as commercial and nonpassenger vehicles). What data or transportation models were used to make these estimates?

No new traffic would result from the completed project.

g. Will the proposal interfere with, affect or be affected by the movement of agricultural and forest products on roads or streets in the area? If so, generally describe.

The project is located in a commercial area of Bellevue. There are no agricultural or forest practice areas in the vicinity. The project will not affect the movement of products through the project area.

h. Describe proposed measures to reduce or control transportation impacts, if any.

Since no new traffic would be generated by the completed project, no mitigation measures are proposed.

15. Public Services

a. Would the project result in an increased need for public services (for example: fire protection, police protection, public transit, health care, schools, other)? If so, generally explain.

The proposed project would not result in the need for any additional public services. An additional fire hydrant is being added near the project to provide additional fire protection in the project vicinity.

b. Describe proposed measures to reduce or control direct impacts on public services.

Impacts to public services are not anticipated; therefore, mitigation measures have not been developed.

DW

16. Utilities

a. Underline utilities currently available at the site:

What utilities are available on site? Electricity, natural gas, water, refuse service, telephone, sanitary sewer, septic systems, other: fiber optic, storm sewer

b. Describe the utilities that are proposed for the project, the utility providing the service, and the general construction activities on the site or in the immediate vicinity which might be needed.

Electricity for the new pump station will be supplied by a drop from the existing Puget Sound Energy overhead line to the control building. Water for a hose bib at the control building would be provided by a new connection from the existing 8 inch water main to the west of the existing pump station. A new leased phone line will be provided for telemetry communications for the new pump station. The leased line will connect to the existing master telemetry equipment at Bellevue City Hall and uplink to the City SCADA system.

DW

C. SIGNATURE

The above answers are true and complete to the best of my knowledge. I understand that the lead agency is relying on them to make its decision.

Signature: _____

Date Submitted: ____April 18, 2016_____

DW

D. REFERENCES AND BIBLIOGRAPHY

Anderson Map Company. 1907. Anderson's Atlas of King County. http://www.historicmapworks.com/Map/US/1250018/Page+18+++Township+24+North++Range+5+East/King+County+1907/Washington/. Accessed November 19, 2015.

City of Bellevue. 2015. *City & Community Facilities Map*. http://www.bellevuewa.gov/standard_maps.htm. Accessed November 25, 2015.

City of Bellevue. 2015. *Comprehensive Plan*. Adopted by Bellevue City Council, December 6, 1993; last amended August 2015. http://www.ci.bellevue.wa.us/comprehensive_plan.htm Accessed: November 25, 2015.

DAHP (Washington State Department of Archeology and Historic Preservation). 2015. Statewide Predictive Model. Last Updated 2010. http://www.dahp.wa.gov/. Accessed November 19, 2015.

DAHP (Washington State Department of Archeology and Historic Preservation). 2015a. WISAARD Database. Available at: http://www.dahp.wa.gov/. accessed November 19, 2015.

DAHP (Washington State Department of Archeology and Historic Preservation). 2015b. Midlakes Pioneer Cemetery - Cemetery Detail Report. On file, DAHP, Olympia, WA.

Ecology (Washington State Department of Ecology). 2015. *State Hazardous Materials Sites Map*. https://fortress.wa.gov/ecy/facilitysite/MapData/MapSearch.aspx?RecordSearchMode=New. Accessed November 25, 2015.

FEMA (Federal Emergency Management Agency). 1995. *Flood Insurance Rate Map King County Washington, and Incorporated Areas*. https://msc.fema.gov/portal. Accessed November 23, 2015.

GeoEngineers. 2015. Draft Midlakes Pump Station Replacement Geotechnical Engineering Services Memorandum. Prepared for City of Bellevue. Redmond, WA.

Hilbert, V., J. Miller, and Z. Zahir. 2001. Puget Sound Geography: Original Manuscript from T. T. Waterman. Lushootseed Press, Seattle. Available from Zahir Consulting Services, Federal Way, WA.

King County. 1954. T 25 North, R 5 East, Sec 28. Aerial Photograph. http://info.kingcounty.gov/transportation/kcdot/roads/mapandrecordscenter/mapvault/Default.aspx?DocId=43uzH69oPkA1. Accessed November 19, 2015.

DW

King County. 1965. T 25 North, R 5 East, Sec 28. Aerial Photograph. Electronic document, http://info.kingcounty.gov/transportation/kcdot/roads/mapandrecordscenter/mapvault/Default.aspx?DocId=zH0AC9NMlWY1. Accessed November 19, 2015.

Kroll Map Company. 1912. Kroll's Atlas of King County. http://www.historicmapworks.com/Map/US/503576/Township+25+N+Range+5+E/King+County+1912/Washington/. Accessed November 19, 2015.

Kroll Map Company. 1926. Kroll's Atlas of King County. http://www.historicmapworks.com/Map/US/1610888/Plate+019+++T++25+N+++R++5+E+++Lake+Washington++Kirkland++Lake+Sammamish++Houghton++Redmond/King+County+1926/Washington/. Accessed November 19, 2015.

Metsker Map Company. 1936. Metsker's Atlas of King County. Electronic document, http://www.historicmapworks.com/Map/US/1260051/Township+25+N+++Range+5+E+++Redmond++Bellevue++Houghton++Kirkland/King+County+1936/Washington/. Accessed November 19, 2015.

MWH. 2015a. Basis of Design Report Pump Station Replacement. October. Prepared for the City of Bellevue. Bellevue, WA.

MWH. 2015b. Preliminary Landscape Plan. December. Prepared for the City of Bellevue. Bellevue, WA.

MWH. 2015c. Construction Stormwater Pollution Prevention Plan (CSWPPP). December. Prepared for the City of Bellevue. Bellevue, WA.

Natural Resources Conservation Service (NRCS). 2015. *Web Soil Survey: King County*. Available: http://websoilsurvey.sc.egov.usda.gov/App/WebSoilSurvey.aspx. Accessed: December 7, 2015.

Pacific Aerial Surveys, Inc. 1937. T 25 North, R 5 East, Sec 28. Aerial Photograph. http://info.kingcounty.gov/transportation/kcdot/roads/mapandrecordscenter/mapvault/Default.aspx?DocId=PZDDwBSr1pc1. Accessed November 19, 2015.

USGS (US Geological Survey). 1950. Mercer Island, WA, 7.5' Series Quadrangle. US Geological Survey, Reston, VA.

USGS (US Geological Survey). 1968. Mercer Island, WA, 7.5' Series Quadrangle. US Geological Survey, Reston, VA.

USGS (US Geological Survey). 1973. Mercer Island, WA, 7.5' Series Quadrangle. US Geological Survey, Reston, VA.

DW

USFWS (US Fish and Wildlife Service). 2015a. *National Wetland Inventory Wetlands Mapper*. http://www.fws.gov/wetlands/Data/Mapper.html. Accessed December 7, 2015.

USFWS (US Fish and Wildlife Service). 2015b. *Critical Habitat Mapper*. http://ecos.fws.gov/crithab/. Accessed December 4, 2015.

US Surveyor General. 1864. Township 25 North, Range 5 East Survey Map. http://www.blm.gov/or/landrecords/survey/yPlatView1_2.php?path=PWA&name=t250n050e_001.jpg. Accessed July 29, 2015.

ESA (Environmental Science Associates). 2015. *East Link Light Rail Transit Project: Archaeological Resources Supplemental Preconstruction Survey for Mitigation Areas*. Prepared for Sound Transit, Seattle, WA.

WDNR (Washington State Department of Natural Resources). Washington Natural Heritage Program GIS Data Set. 2015. http://www1.dnr.wa.gov/nhp/refdesk/gis/wnhpgis.html. Accessed December 4, 2015.

WDFW (Washington State Department of Fish and Wildlife). 2015. *PHS on the Web*. http://apps.wdfw.wa.gov/phsontheweb/. Accessed December 4, 2015.

DW

E. FIGURES

Figure 1: Vicinity Map

Attachment A: Preliminary Design Plans

DW

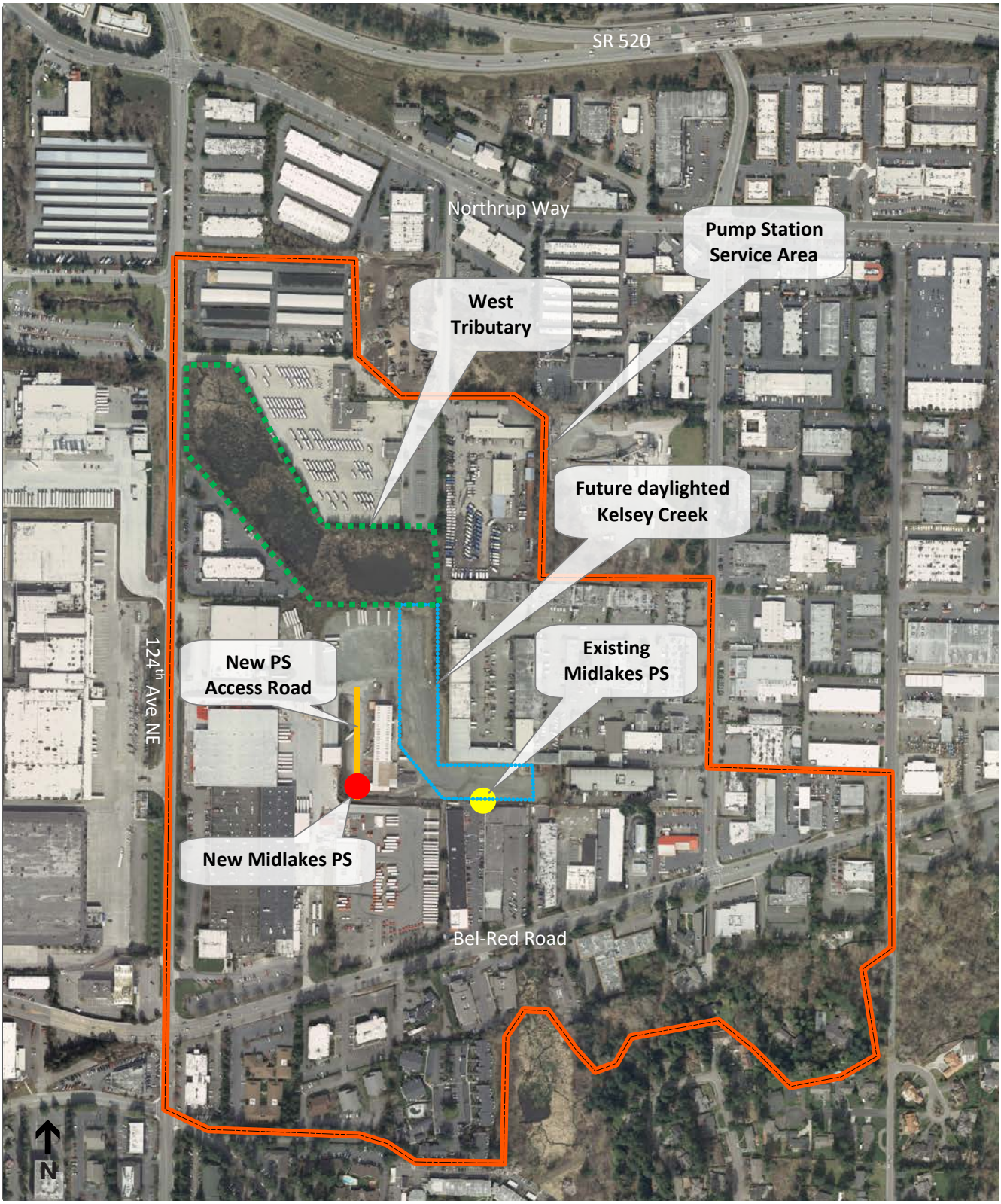

SOURCE: MWH 2015

Midlake Pump Station Project . 140663

Figure 1

Midlakes Pump Station
Capacity Improvements Site Map

DW

City of Bellevue Utilities

MIDLAKES PUMP STATION CAPACITY IMPROVEMENTS

PERMIT APPLICATION - APRIL 13, 2016
BID NO. -

MAYOR
JOHN STOKES

DEPUTY MAYOR
JOHN CHELMINIAK

CITY MANAGER
BRAD MIYAKE

DIRECTOR OF UTILITIES
NAV OTAL

CITY COUNCIL
CONRAD LEE
JENNIFER ROBERTSON
LYNNE ROBINSON
VANDANA SLATTER
KEVIN WALLACE

INDEX OF DRAWINGS

GENERAL

*	G-1	INDEX OF DRAWINGS AND LOCATION / VICINITY MAP
	G-2	DESIGN CRITERIA AND EQUIPMENT SCHEDULE
	G-3	GENERAL SYMBOLS AND LEGENDS
	G-4	ABBREVIATIONS
	G-5	HYDRAULIC PROFILE

CIVIL

*	C-1	GENERAL CIVIL - GENERAL NOTES AND STANDARD DETAILS - I
*	C-2	GENERAL CIVIL - STANDARD DETAILS - II
*	C-3	EASEMENTS, EROSION AND SEDIMENT CONTROL, STORMWATER MANAGEMENT
*	C-4A	SITE LAYOUT AND DEMOLITION PLAN
*	C-4B	SITE PLAN AND GRADING
*	C-4C	SLOPE CATEGORIES
*	C-5	SITE PIPING PLAN
	C-6	SEWER PIPING PROFILE
	C-7	FORCE MAIN PIPING PROFILE
*	C-8	FACILITIES AND YARD PIPING CONTROL DATA
	C-9	TEMP BYPASS PIPING AND EXISTING PUMP STATION WETWELL REHABILITATION

MECHANICAL

*	M-1	PIPING SCHEDULE
*	M-2A	GENERAL MECHANICAL - GENERAL NOTES AND STANDARD DETAILS - I
*	M-2B	GENERAL MECHANICAL - STANDARD DETAILS - II
	M-3	PUMP STATION PLAN
	M-4	PUMP STATION SECTION
*	M-5	CONTROL BUILDING PLAN AND SECTION
	M-6	STANDBY GENERATOR DETAILS
	M-7	PUMP STATION SECTION - 2

STRUCTURAL

S-1	GENERAL STRUCTURAL NOTES - 1
S-2	GENERAL STRUCTURAL NOTES - 2
S-3	GENERAL STRUCTURAL NOTES - 3
S-4A	GENERAL STRUCTURAL - STRUCTURAL STANDARD DETAILS - I
S-4B	GENERAL STRUCTURAL - STRUCTURAL STANDARD DETAILS - II
S-5	STRUCTURAL CONTROL BUILDING FOUNDATION AND ROOF FRAMING PLANS
S-6	STRUCTURAL CONTROL BUILDING SECTIONS AND DETAILS

ARCHITECTURAL

A-1	CONTROL BUILDING BUILDING CODE SUMMARY AND GENERAL NOTES
A-2	CONTROL BUILDING SCHEDULES AND STANDARD DETAILS
A-3	CONTROL BUILDING DETAILS I
A-4	NOT USED
A-5	CONTROL BUILDING FLOOR AND ROOF PLANS
A-6	CONTROL BUILDING EXTERIOR ELEVATIONS

LANDSCAPE

*	L1	LANDSCAPE NOTES AND LEGEND
	L2	IRRIGATION NOTES AND LEGEND
*	L3	LANDSCAPE PLAN
	L4	IRRIGATION PLAN

ELECTRICAL

E-1	GENERAL ELECTRICAL SYMBOLS
E-2	GENERAL ELECTRICAL NOTES AND ABBREVIATIONS
E-3	GENERAL ELECTRICAL STANDARD DETAILS
E-4	ELECTRICAL ONE-LINE DIAGRAM
E-5	ELECTRICAL SITE PLAN
E-6	ELECTRICAL BUILDING PLAN

INSTRUMENTATION

I-1A	GENERAL INSTRUMENTATION AND CONTROLS - SYMBOLS AND NOMENCLATURE
I-1B	PROCESS AND INSTRUMENTATION DIAGRAM
I-2	CONTROL SYSTEM BLOCK DIAGRAM ELECTRICAL ROOM INTERFACE
I-3	CONTROL SYSTEM BLOCK DIAGRAM WET WELL LEVEL MONITORING
I-4	CONTROL SYSTEM BLOCK DIAGRAM VAULT MONITORING
I-5	SCADA NETWORK DIAGRAM
I-6	WIRING INTERFACE REQUIREMENTS
I-7	CONTROL FEATURE REQUIREMENTS
I-8	RTU PANEL ELEVATION
I-9	LCP PANEL ELEVATION
I-10	MCC ELEVATION

* INCLUDED IN PERMIT APPLICATIONS

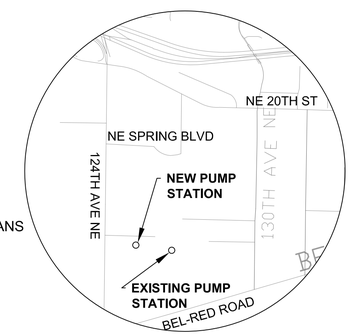

LOCATION MAP
NO SCALE

Approved By

UTILITIES ENGINEERING MANAGER DATE

PROJECT MANAGER DATE

MWH®

FOR PERMIT REVIEW ONLY - APRIL 13, 2016

NOT FOR CONSTRUCTION

This document is an interim document and not suitable for construction. As an interim document, it may contain data that is potentially inaccurate or incomplete and is not to be relied upon without the express written consent of the preparer.

CIVIL GENERAL NOTES

CITY OF BELLEVUE GENERAL NOTES

1. ALL WORK SHALL CONFORM TO THE 2016 CITY OF BELLEVUE UTILITY ENGINEERING STANDARDS AND THE DEVELOPER EXTENSION AGREEMENT.

2. ALL NEW MANHOLES SHALL CONFORM TO THE CITY OF BELLEVUE'S STANDRAD DETAILS.

3. SANITARY SEWER PIPE SHALL BE PVC CONFORMING TO ASTM D-3034 SDR 35 (4"-15") OR ASTM F-679 (18"-27"). BEDDING AND BACKFILL SHALL BE AS SHOWN IN THE STANDARD DETAILS.

4. WHERE SHOWN AS C900 PVC, THE SEWER PIPE SHALL HAVE DIMENSION RATIO (DR18) AND CONFORM TO AWWA C900 OR AWWA C905.

9. THE LOCATIONS OF ALL EXISTING UTILITIES SHOWN HEREON HAVE BEEN ESTABLISHED BY FIELD SURVEY OR OBTAINED FROM AVAILABLE RECORDS AND SHOULD THEREFORE BE CONSIDERED APPROXIMATE ONLY AND NOT NECESSARILY COMPLETE. IT IS THE SOLE RESPONSIBILITY OF THE CONTRACTOR TO INDEPENDENTLY VERIFY THE ACCURACY OF ALL UTILITY LOCATIONS SHOWN, AND TO FURTHER DISCOVER AND AVOID ANY OTHER UTILITIES NOT SHOWN HEREON WHICH MAY BE AFFECTED BY THE IMPLEMENTATION OF THIS PLAN. IMMEDIATELY NOTIFY THE ENGINEER IF A CONFLICT EXISTS.

10. ALL TESTING AND CONNECTIONS TO EXISTING MAINS SHALL BE DONE IN THE PRESENCE OF A REPRESENTATIVE OF THE CITY OF BELLEVUE UTILITIES DEPARTMENT.

11. ALL TRENCHES SHALL BE COMPACTED, AND ATB IN PLACE IN PAVED AREAS, PRIOR TO TESTING SEWER LINES FOR ACCEPTANCE.

14. ALL MANHOLES IN UNPAVED AREAS SHALL INCLUDE A CONCRETE SEAL AROUND ADJUSTING RINGS PER STANDARD DETAIL.

15. CONTRACTOR SHALL ADJUST ALL MANHOLE RIMS TO FLUSH WITH FINAL FINISHED GRADES, UNLESS OTHERWISE SHOWN.

16. ALL SEWER MAIN EXTENSIONS WITHIN THE PUBLIC RIGHT-OF-WAY OR IN EASEMENTS MUST BE "STAKED" BY A SURVEYOR LICENSED IN WASHINGTON STATE FOR "LINE AND GRADE" AND CUT SHEETS PROVIDED TO THE ENGINEER, PRIOR TO STARTING CONSTRUCTION.

17. CONTRACTOR SHALL INSTALL, AT ALL CONNECTIONS TO EXISTING DOWNSTREAM MANHOLES, SCREENS OR PLUGS TO PREVENT FOREIGN MATERIALS FROM ENTERING EXISTING SANITARY SEWER SYSTEM. SCREENS OR PLUGS SHALL REMAIN IN PLACE THROUGHOUT THE DURATION OF CONSTRUCTION AND SHALL BE REMOVED ALONG WITH COLLECTED DEBRIS AT THE TIME OF FINAL INSPECTION AND IN THE PRESENCE OF A REPRESENTATIVE OF THE CITY OF BELLEVUE UTILITIES DEPARTMENT.

18. SURFACE RESTORATION OF EXISTING ASPHALT PAVEMENT SHALL BE AS REQUIRED BY THE RIGHT-OF-WAY USE PERMIT.

20. THE CONTRACTOR SHALL ENSURE AND VERIFY THAT NO CONFLICTS EXIST BETWEEN SANITARY SEWER LINES AND PROPOSED OR EXISTING UTILITIES PRIOR TO CONSTRUCTION.

21. MINIMUM COVER OVER SEWER PIPE SHALL BE FIVE FEET, UNLESS OTHERWISE SHOWN.

22. THE CONTRACTOR SHALL USE A VACUUM STREET SWEEPER TO REMOVE DUST AND DEBRIS FROM PAVEMENT AREAS AS DIRECTED BY THE ENGINEER. FLUSHING OF STREETS SHALL NOT BE PERMITTED WITHOUT PRIOR CITY APPROVAL.

23. BEFORE COMMENCEMENT OF TRENCHING, THE CONTRACTOR SHALL PROVIDE FILTER FABRIC FOR ALL DOWNHILL STORM DRAIN INLETS AND CATCH BASINS THAT WILL RECEIVE RUNOFF FROM THE PROJECT SITE. THE CONTRACTOR SHALL PERIODICALLY INSPECT THE CONDITION OF ALL FILTER FABRIC AND REPLACE AS NECESSARY.
FOR ALL CONSTRUCTION DURING THE RAINY SEASON, DOWNHILL BASINS AND INLETS MUST BE PROTECTED WITH CATCH BASIN INSERTS. SIMPLY PLACING FILTER FABRIC UNDER THE GRATE IS NOT ACCEPTABLE.

25. AVOID CROSSING WATER OR SEWER MAINS AT HIGHLY ACUTE ANGLES. THE SMALLEST ANGLE MEASURE BETWEEN UTILITIES SHOULD BE 45 TO 90 DEGREES.

26. AT POINTS WHERE EXISTING THRUST BLOCKING IS FOUND, MINIMUM CLEARANCE BETWEEN THE CONCRETE BLOCKING AND OTHER BURIED UTILITIES OR STRUCTURES SHALL BE 5 FEET.

28. CALL 1-800-424-5555, OR 811, 72 HOURS BEFORE CONSTRUCTION FOR UTILITY LOCATES.

29. MANHOLES, CATCH BASINS AND VAULTS ARE CONSIDERED TO BE PERMIT-REQUIRED CONFINED SPACES. ENTRY INTO THESE SPACES SHALL BE IN ACCORDANCE WITH CHAPTER 296-809 WAC.

30. THE CONTRACTOR SHALL PROVIDE COLOR CCTV EQUIPMENT SHALL INCLUDE TELEVISION CAMERAS, A TELEVISION MONITOR, CABLES, POWER SOURCES, SIDE-LAUNCH CAPABLE IF NECESSARY, AND OTHER EQUIPMENT. FOCAL DISTANCE SHALL BE ADJUSTABLE THROUGH A RANGE FROM 6 INCHES TO INFINITY. THE CCTV EQUIPMENT SHALL INCLUDE A DISTANCE MEASURING INSTRUMENT (DMI) TO MEASURE THE HORIZONTAL DISTANCE TRAVELED BY THE CAMERA. THE DMI READOUT SHALL APPEAR CONTINUOUSLY ON THE VIDEO PRODUCED BY THE INSPECTION AND SHALL BE ACCURATE TO LESS THAN 1 PERCENT ERROR OVER THE LENGTH OF THE SECTION OF PIPELINE BEING INSPECTED. FOR STORM OR SANITARY SEWERS, THE LENGTH IS MEASURED FROM THE CENTERLINE OF THE MANHOLE OR CATCH BASIN TO THE CENTERLINE OF THE NEXT MANHOLE OR CATCH BASIN.
THE CCTV INSPECTION SYSTEM SHALL BE PERFORMED UTILIZING ONE OF THE FOLLOWING VIDEO CAMERA SYSTEMS:
˙ REMOTE-FOCUS STATIONARY LENS CAMERAS;
˙ ROTATING LENS CAMERAS; OR
˙ PAN-AND-TILT CAMERAS.

THE CAMERA AND TELEVISION MONITOR SHALL PRODUCE A MINIMUM (480 LINES-PER- INCH) RESOLUTION. THE VIDEO CAMERA SHALL BE MOUNTED ON A SKID, FLOATABLE RAFT SYSTEM, OR TRANSPORTER BASED ON THE CONDITIONS OF THE PIPELINE TO BE TELEVISED. TELEPHONES, RADIOS, OR OTHER SUITABLE MEANS OF COMMUNICATION SHALL BE UTILIZED TO ENSURE COMMUNICATION EXISTS BETWEEN MEMBERS OF THE CREW. THE CONTRACTOR SHALL INSPECT THE PIPELINE DURING OPTIMUM LOW-FLOW LEVEL CONDITIONS, AS PRE-APPROVED BY THE UTILITY INSPECTOR. THE CONTRACTOR SHALL COORDINATE WITH THE UTILITY INSPECTOR PRIOR TO VIDEO INSPECTION. THE TELEVISION CAMERA UTILIZED SHALL BE SPECIFICALLY DESIGNED AND CONSTRUCTED FOR SEWER INSPECTION. THE CAMERA SHALL BE OPERATIVE IN 100 PERCENT HUMIDITY CONDITIONS. LIGHTING FOR THE CAMERA SHALL MINIMIZE REFLECTIVE GLARE. LIGHTING AND PICTURE QUALITY SHALL BE SUITABLE TO PROVIDE A CLEAR, IN-FOCUS PICTURE OF THE ENTIRE PERIPHERY OF THE PIPELINE FOR ALL CONDITIONS ENCOUNTERED DURING THE WORK. IF THE QUALITY OF THE VIDEO IS DEEMED TO BE UNACCEPTABLE BY THE UTILITY INSPECTOR, THE PIPELINE SHALL BE RE-TELEVISED AT NO COST TO THE CITY. THE CAMERA SHALL BE MOVED THROUGH THE PIPELINE AT A UNIFORM RATE, STOPPING WHEN NECESSARY TO ENSURE PROPER DOCUMENTATION OF THE PIPELINE CONDITION, BUT IN NO CASE SHALL THE TELEVISION CAMERA BE PULLED AT A SPEED GREATER THAN 30 FEET PER MINUTE STOPPING WHEN NECESSARY TO ENSURE PROPER DOCUMENTATION OF THE

CIVIL GENERAL NOTES - CONTINUED

PIPE CONDITION. ALL VIDEO INSPECTIONS SHALL BE RECORDED IN .MPG FILE FORMAT ON A DISK (EITHER EXTERNAL HARD DRIVE, THUMB DRIVE OR DVD). THE VIDEO SHALL BE TAKEN AFTER INSTALLATION, CLEANING, AND PRESSURE TEST TO INSURE THAT NO DEFECTS EXIST. THE PROJECT WILL NOT BE ACCEPTED UNTIL ALL DEFECTS HAVE BEEN REPAIRED.

31. WHEN WORK IS TO OCCUR IN EASEMENTS, THE CONTRACTOR SHALL NOTIFY THE EASEMENT GRANTOR AND BELLEVUE UTILITIES HOURS IN ADVANCE OF BEGINNING WORK (NOT INCLUDING WEEKENDS OR HOLIDAYS). FAILURE TO NOTIFY GRANTOR AND BELLEVUE UTILITIES WILL RESULT IN A STOP WORK ORDER BEING POSTED UNTIL THE MATTER IS RESOLVED TO THE SATISFACTION OF BELLEVUE UTILITIES. A WRITTEN RELEASE FROM THE EASEMENT GRANTOR SHALL BE FURNISHED TO THE UTILITIES INSPECTOR PRIOR TO PERMIT SIGN-OFF.

32. THE CONTRACTOR SHALL RESTORE THE RIGHT-OF-WAY AND EXISTING PUBLIC SEWER EASEMENT(S) AFTER CONSTRUCTION TO A CONDITION EQUAL OR BETTER THAN CONDITION PRIOR TO ENTRY. THE CONTRACTOR SHALL FURNISH A SIGNED RELEASE FROM ALL AFFECTED PROPERTY OWNERS AFTER RESTORATION HAS BEEN COMPLETED.

GENERAL

1. THE CONTRACTOR SHALL TAKE ALL PRECAUTIONARY MEASURES NECESSARY TO PROTECT EXISTING IMPROVEMENTS WHICH ARE TO REMAIN IN PLACE FROM DAMAGE. ALL IMPROVEMENTS DAMAGED BY THE CONTRACTOR'S OPERATIONS SHALL BE EXPEDITIOUSLY REPAIRED OR RECONSTRUCTED AT THE CONTRACTOR'S EXPENSE WITHOUT ADDITIONAL COMPENSATION.

2. THE CONTRACTOR SHALL PROPERLY DISPOSE OF ALL DEBRIS FROM DEMOLITION AT CONTRACTORS EXPENSE.

3. ALL BUILDING COORDINATES ARE TO OUTSIDE CORNER OF COLUMN OR BUILDING.

4. THE CONTRACTOR SHALL DISPOSE OF ALL NON-ORGANIC WASTES SUCH AS OLD GUNITE, PIPING, ROCK RUBBLE ETC... AT AN APPROVED LANDFILL OR, OTHER SUITABLE DISPOSAL SITES AT THE CONTRACTOR'S EXPENSE.

5. CONTRACTOR SHALL RESTORE ALL SURVEY MONUMENTS THAT ARE DAMAGED OR DESTROYED DURING CONSTRUCTION.

UTILITIES

1. PRIOR TO THE START OF CONSTRUCTION, THE CONTRACTOR SHALL LOCATE ALL EXISTING UTILITIES IN AND AROUND THE AREAS OF NEW CONSTRUCTION. THE CONTRACTOR SHALL POTHOLE FOR EXISTING UTILITIES PRIOR TO SUBMITTAL OF SHOP DRAWINGS, FOR POINTS OF CONNECTIONS.

2. THE CONTRACTOR SHALL PROTECT ALL REMAINING EXISTING UTILITIES.

3. LOCATIONS OF UNDERGROUND UTILITIES SHOWN ON THE DRAWINGS WERE OBTAINED FROM AVAILABLE RECORDS. THE CONTRACTOR SHALL VERIFY ALL LOCATIONS AND ELEVATIONS AND SHALL TAKE ALL PRECAUTIONARY MEASURES NECESSARY TO PROTECT UTILITY LINES WHETHER SHOWN OR NOT SHOWN.

4. PRIOR TO ANY CONNECTION TO AN EXISTING UTILITY, THE CONTRACTOR SHALL COORDINATE WITH THE UTILITY OWNER.

5. PRIOR TO ANY EXCAVATION IN THE VICINITY OF ANY EXISTING UNDERGROUND FACILITIES, INCLUDING ALL WATER, SEWER, STORM DRAIN, GAS, PETROLIUM PRODUCTS, OR OTHER PIPELINES; ALL BURIED ELECTRIC POWER, COMMUNICATIONS, OR TELEVISION CABLES; ALL TRAFFIC SIGNAL AND STREET LIGHTING FACILITIES; AND ALL ROADWAY, STATE HIGHWAY, AND RAILROAD RIGHTS-OF-WAY, THE CONTRACTOR SHALL NOTIFY THE RESPECTIVE AUTHORITIES REPRESENTING THE OWNERS OR AGENCIES RESPONSIBLE FOR SUCH FACILITIES NOT LESS THAN 3 DAYS NOR MORE THAN 7 DAYS PRIOR TO EXCAVATION SO THAT A REPRESENTATIVE OF SAID OWNERS OR AGENCIES CAN BE PRESENT DURING SUCH WORK IF THEY SO DESIRE. IN THE CASE OF THE UNDERGROUND UTILITY SERVICE ALERT CENTER, THIS NOTICE WILL GIVE THEM TIME TO MARK THE LOCATION OF THE UTILITIES. THE CONTRACTOR SHALL ALSO NOTIFY THE REGIONAL OR LOCAL UNDERGROUND SERVICE ALERT COMPANY AT LEAST 3 DAYS, BUT NO MORE THAN 7 DAYS, PRIOR TO SUCH EXCAVATION.

PIPING

1. THE CONTRACTOR SHALL COMPLY WITH THE STATE DEPARTMENT OF HEALTH SERVICES CRITERIA FOR THE SEPARATION OF WATER MAINS AND SANITARY SEWERS.

2. THE CONTRACTOR SHALL PROVIDE A MINIMUM OF 36 INCHES OF COVER ON ALL PIPELINES UNLESS OTHERWISE SHOWN OR DIRECTED.

3. STRAIGHT SLOPES SHALL BE MAINTAINED BETWEEN INVERT ELEVATIONS SHOWN OR SPECIFIED.

4. THE CONTRACTOR SHALL ADJUST ALL VALVE BOXES, PULL BOXES AND MANHOLES TO FINISHED GRADE UNLESS OTHERWISE SHOWN OR SPECIFIED. MANHOLES IN OPEN FIELDS SHALL BE SET ONE FOOT ABOVE GRADE. APPROXIMATE RIM ELEVATIONS ARE SHOWN ON DRAWINGS.

5. ALL PIPE TRENCHING AND BACKFILL SHALL BE IN ACCORDANCE WITH DETAIL C-602 FOR RIGID PIPE AND C-601 FOR FLEXIBLE PIPE. THE PIPING SHOWN ON THESE PLANS SHALL BE RESTRAINED JOINT DESIGN AT ALL SLEEVE TYPE COUPLINGS.

6. THE CONTRACTOR SHALL PROVIDE TWO FLEXIBLE SLEEVE TYPE COUPLINGS WITH RESTRAINED JOINTS FOR EACH PIPE PENETRATING A STRUCTURE. THE COUPLINGS AND FLEXIBLE JOINTS SHALL BE 3-FEET AND 3-FEET AWAY FROM THE STRUCTURE. ALL PIPING SHALL BE RESTRAINED JOINT DESIGN UNLESS INDICATED OTHERWISE. COUPLINGS AND RESTRAINED JOINTS SHALL BE PROVIDED WHETHER SHOWN ON THE DRAWINGS OR NOT. STEEL PIPE RESTRAINED HARNESS SETS SHALL BE PROVIDED IN ACCORDANCE WITH AWWA M-11. ALL OTHER PIPES, COUPLINGS AND RESTRAINED JOINTS SHALL BE APPROVED BY THE ENGINEER. ALL RESTRAINED JOINTS SHALL BE IN ACCORDANCE WITH THE PIPE MANUFACTURERS' RECOMMENDATIONS.

EROSION CONTROL

1. THE CONTRACTOR SHALL SUBMIT AN EROSION CONTROL PLAN FOR WORK DURING THE CONSTRUCTION, SIGNED AND STAMPED BY A REGISTERED CIVIL ENGINEER PRIOR TO THE START OF CONSTRUCTION.

   a. ALL SLOPES SHALL BE PROTECTED FROM EROSION DURING ROUGH GRADING OPERATIONS AND THEREAFTER, UNTIL INSTALLATION OF FINAL GROUNDCOVER (SEE LANDSCAPE PLANS FOR FINAL GROUNDCOVER).

   b. ALL SLOPE PROTECTION SWALES SHALL BE CONSTRUCTED AT THE SAME TIME AS BANKS ARE GRADED.

   c. THE CONTRACTOR IS RESPONSIBLE FOR IMPLEMENTATION AND MAINTENANCE OF EROSION CONTROL MEASURES CONTAINED WITHIN THE CONTRACT SPECIFICATIONS OR AS REQUIRED BY THE CITY, DISTRICT, OR OTHER REGULATORY AUTHORITY. THE CONTRACTOR SHALL ALSO PROVIDE ANY ADDITIONAL EROSION CONTROL MEASURES (E.G. HYDROSEEDING, MULCHING OF STRAW, SAND BAGGING, DIVERSION DITCHES, ETC.) DICTATED BY FIELD CONDITIONS TO PREVENT EROSION OR THE INTRODUCTION OF DIRT, MUD, OR DEBRIS INTO EXISTING PUBLIC STREETS, WATERWAYS, OR ONTO ADJACENT PROPERTIES DURING ANY PHASE OF CONSTRUCTION OPERATIONS.

CIVIL GENERAL NOTES - CONTINUED

SURVEY AND CONTROL

HORIZONTAL DATUM: NAD83 (2011)

VERTICAL DATUM: NAVD88

DATE OF SURVEY:
12/05/13
05/29/14

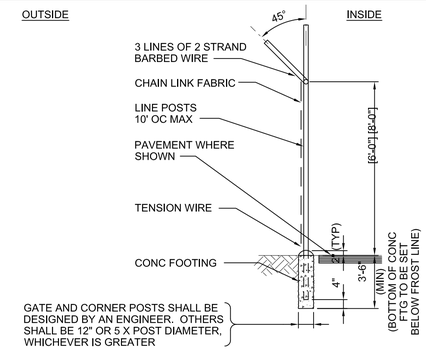

NOTES:

1. SEE SPECIFICATIONS FOR FENCE MATERIAL, COATINGS, AND INSTALLATION REQUIREMENTS.

2. EXTENSION ARM MAY BE TURNED IN AT OPTION OF OWNER.

CHAIN LINK FENCE

REV 110112 C-101

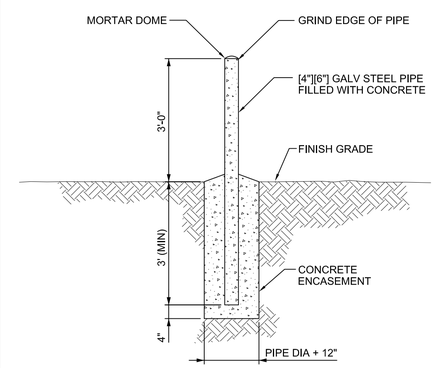

GUARD POST

REV 110112 C-114

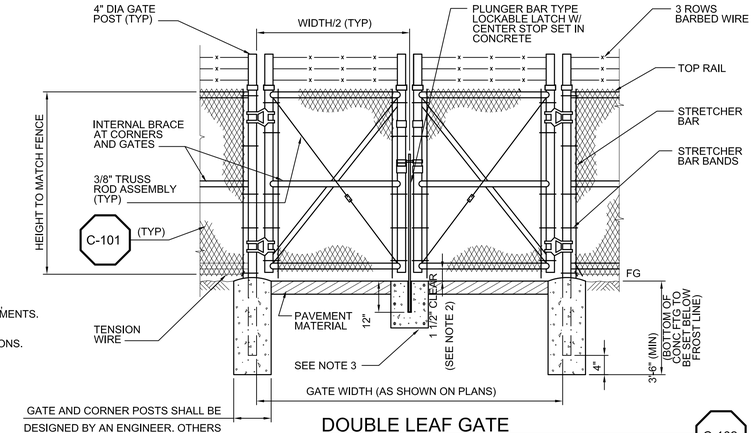

NOTES:

1. SEE SPECIFICATIONS FOR FENCE MATERIAL, COATINGS, AND INSTALLATION REQUIREMENTS.

2. SEE SPECIFICATIONS FOR CLEARANCES IN SNOW REGIONS.

3. 12" DIAMETER X 18" DEEP CONCRETE STOP W/ 20 GA STEEL PLUNGER SLEEVE, DIA = ROD OD +1/2".

DOUBLE LEAF GATE

REV 110112 C-102

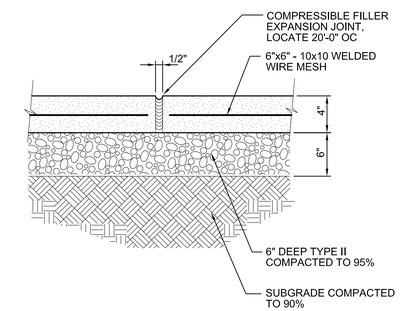

CONCRETE PAVEMENT DETAIL

C-901

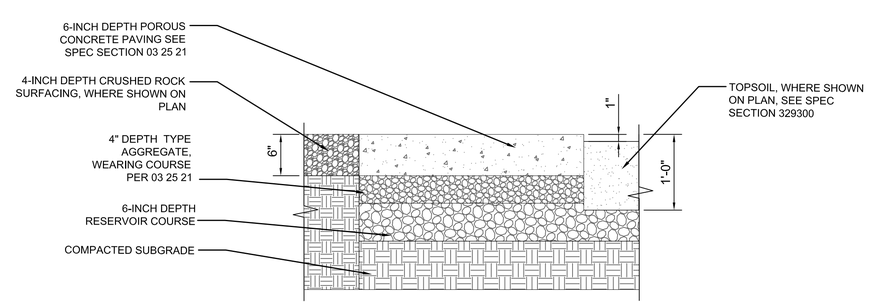

POROUS CONCRETE PAVING

C-903

REV	DATE	BY	DESCRIPTION

SCALE: NO SCALE

WARNING: 0 ½ 1 — IF THIS BAR DOES NOT MEASURE 1" THEN DRAWING IS NOT TO SCALE

DESIGNED Q DENG
DRAWN P PAWAR
CHECKED C SMITH

FOR PERMIT REVIEW ONLY - APRIL 13, 2016

NOT FOR CONSTRUCTION

This document is an interim document and not suitable for construction. As an interim document, it may contain data that is potentially inaccurate or incomplete and is not to be relied upon without the express written consent of the preparer.

MWH®

CITY OF BELLEVUE UTILITIES
MIDLAKES PUMP STATION CAPACITY IMPROVEMENTS

MIDLAKES PUMP STATION CAPACITY IMPROVEMENTS

GENERAL CIVIL
GENERAL NOTES AND STANDARD DETAILS - I

SHEET C-1

10505461

C:\pwworkdir\0194369\MLPS_WWPS_ C-01.dwg | Layout: C-2A
PLOTTED: Apr 13, 2016-09:15:44am By friskar
XREFS: MLPS_WWPS_Border.dwg
IMAGES: 20151210 Civil Markups Attachment City Details_Page_1.tif; 20151210 Civil Markups Attachment City Details_Page_2.tif; 20151210 Civil Markups Attachment City Details_Page_3.tif; 20151210 Civil Markups Attachment City Details_Page_4.tif;

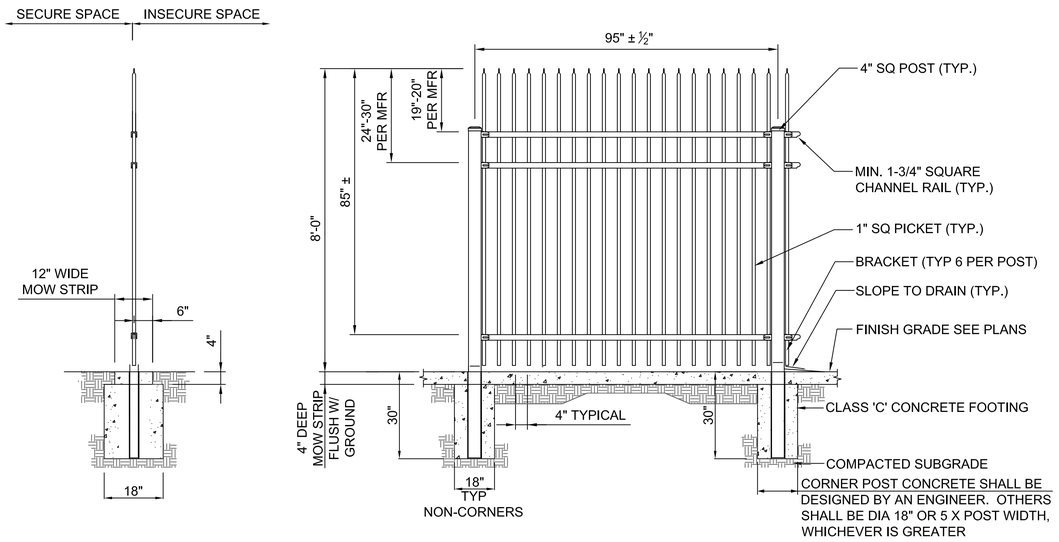

ORNAMENTAL PICKET FENCE — C-904

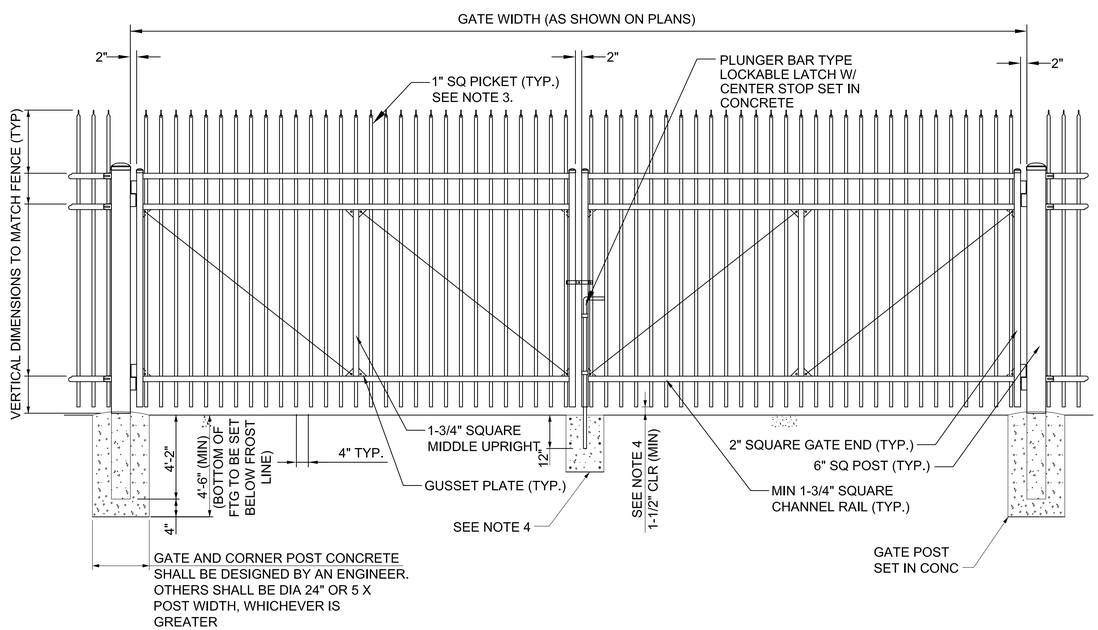

DOUBLE LEAF VEHICULAR GATE — C-905

NOTES:

1. SEE SPEC SECTION 02833 AND INSTALLATION REQUIREMENTS.
2. GATE TO BE INSTALLED WITH KEEPER TO SECURE IN OPEN POSITION.
3. ORIENTATION OF PICKETS SHALL MATCH ADJACENT FENCE.
4. 12" DIAMETER X 18" DEEP CONCRETE STOP W/ 6-#4 BARS, 20 GA STEEL PLUNGER SLEEVE, DIA = ROD OD + 1/2".

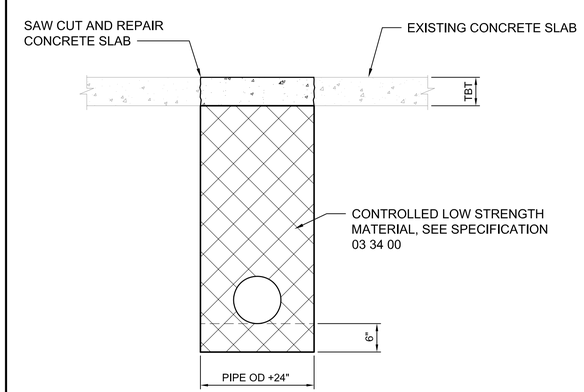

TRENCH SECTION RIGID PIPE
UNDER EXISTING CONCRETE SLAB — C-906

REV	DATE	BY	DESCRIPTION

SCALE: NO SCALE

WARNING: 0 ½ 1 — IF THIS BAR DOES NOT MEASURE 1" THEN DRAWING IS NOT TO SCALE

DESIGNED Q DENG
DRAWN S STARK
CHECKED C SMITH

FOR PERMIT REVIEW ONLY - APRIL 13, 2016

NOT FOR CONSTRUCTION
This document is an interim document and not suitable for construction. As an interim document, it may contain data that is potentially inaccurate or incomplete and is not to be relied upon without the express written consent of the preparer.

MWH®

CITY OF BELLEVUE UTILITIES
MIDLAKES PUMP STATION CAPACITY IMPROVEMENTS

MIDLAKES PUMP STATION CAPACITY IMPROVEMENTS

GENERAL CIVIL
STANDARD DETAILS - II

SHEET C-2

10505461

C:\pwworkdir\d0194369\MLPS_WWPS_C-2.dwg | Layout: C-2
PLOTTED: Apr 13, 2016-09:27:51am By friskar
XREFS: MLPS_WWPS_Border.dwg
IMAGES:

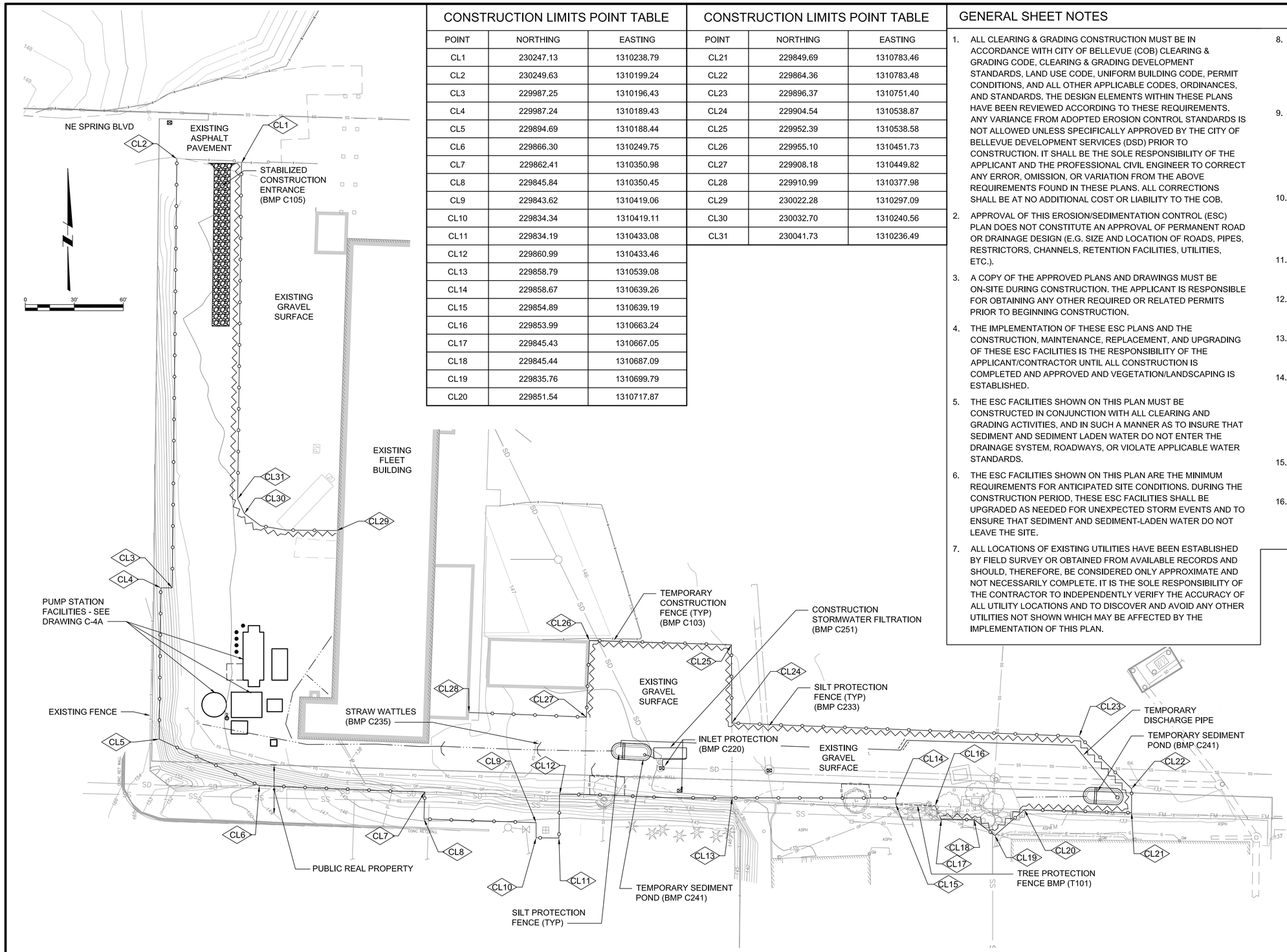

CONSTRUCTION LIMITS POINT TABLE

POINT	NORTHING	EASTING
CL1	230247.13	1310238.79
CL2	230249.63	1310199.24
CL3	229987.25	1310196.43
CL4	229987.24	1310189.43
CL5	229894.69	1310188.44
CL6	229866.30	1310249.75
CL7	229862.41	1310350.98
CL8	229845.84	1310350.45
CL9	229843.62	1310419.06
CL10	229834.34	1310419.11
CL11	229834.19	1310433.08
CL12	229860.99	1310433.46
CL13	229858.79	1310539.08
CL14	229858.67	1310639.26
CL15	229854.89	1310639.19
CL16	229853.99	1310663.24
CL17	229845.43	1310667.05
CL18	229845.44	1310687.09
CL19	229835.76	1310699.79
CL20	229851.54	1310717.87

CONSTRUCTION LIMITS POINT TABLE

POINT	NORTHING	EASTING
CL21	229849.69	1310783.46
CL22	229864.36	1310783.48
CL23	229896.37	1310751.40
CL24	229904.54	1310538.87
CL25	229952.39	1310538.58
CL26	229955.10	1310451.73
CL27	229908.18	1310449.82
CL28	229910.99	1310377.98
CL29	230022.28	1310297.09
CL30	230032.70	1310240.56
CL31	230041.73	1310236.49

GENERAL SHEET NOTES

1. ALL CLEARING & GRADING CONSTRUCTION MUST BE IN ACCORDANCE WITH CITY OF BELLEVUE (COB) CLEARING & GRADING CODE, CLEARING & GRADING DEVELOPMENT STANDARDS, LAND USE CODE, UNIFORM BUILDING CODE, PERMIT CONDITIONS, AND ALL OTHER APPLICABLE CODES, ORDINANCES, AND STANDARDS. THE DESIGN ELEMENTS WITHIN THESE PLANS HAVE BEEN REVIEWED ACCORDING TO THESE REQUIREMENTS. ANY VARIANCE FROM ADOPTED EROSION CONTROL STANDARDS IS NOT ALLOWED UNLESS SPECIFICALLY APPROVED BY THE CITY OF BELLEVUE DEVELOPMENT SERVICES (DSD) PRIOR TO CONSTRUCTION. IT SHALL BE THE SOLE RESPONSIBILITY OF THE APPLICANT AND THE PROFESSIONAL CIVIL ENGINEER TO CORRECT ANY ERROR, OMISSION, OR VARIATION FROM THE ABOVE REQUIREMENTS FOUND IN THESE PLANS. ALL CORRECTIONS SHALL BE AT NO ADDITIONAL COST OR LIABILITY TO THE COB.
2. APPROVAL OF THIS EROSION/SEDIMENTATION CONTROL (ESC) PLAN DOES NOT CONSTITUTE AN APPROVAL OF PERMANENT ROAD OR DRAINAGE DESIGN (E.G. SIZE AND LOCATION OF ROADS, PIPES, RESTRICTORS, CHANNELS, RETENTION FACILITIES, UTILITIES, ETC.).
3. A COPY OF THE APPROVED PLANS AND DRAWINGS MUST BE ON-SITE DURING CONSTRUCTION. THE APPLICANT IS RESPONSIBLE FOR OBTAINING ANY OTHER REQUIRED OR RELATED PERMITS PRIOR TO BEGINNING CONSTRUCTION.
4. THE IMPLEMENTATION OF THESE ESC PLANS AND THE CONSTRUCTION, MAINTENANCE, REPLACEMENT, AND UPGRADING OF THESE ESC FACILITIES IS THE RESPONSIBILITY OF THE APPLICANT/CONTRACTOR UNTIL ALL CONSTRUCTION IS COMPLETED AND APPROVED AND VEGETATION/LANDSCAPING IS ESTABLISHED.
5. THE ESC FACILITIES SHOWN ON THIS PLAN MUST BE CONSTRUCTED IN CONJUNCTION WITH ALL CLEARING AND GRADING ACTIVITIES, AND IN SUCH A MANNER AS TO INSURE THAT SEDIMENT AND SEDIMENT LADEN WATER DO NOT ENTER THE DRAINAGE SYSTEM, ROADWAYS, OR VIOLATE APPLICABLE WATER STANDARDS.
6. THE ESC FACILITIES SHOWN ON THIS PLAN ARE THE MINIMUM REQUIREMENTS FOR ANTICIPATED SITE CONDITIONS. DURING THE CONSTRUCTION PERIOD, THESE ESC FACILITIES SHALL BE UPGRADED AS NEEDED FOR UNEXPECTED STORM EVENTS AND TO ENSURE THAT SEDIMENT AND SEDIMENT-LADEN WATER DO NOT LEAVE THE SITE.
7. ALL LOCATIONS OF EXISTING UTILITIES HAVE BEEN ESTABLISHED BY FIELD SURVEY OR OBTAINED FROM AVAILABLE RECORDS AND SHOULD, THEREFORE, BE CONSIDERED ONLY APPROXIMATE AND NOT NECESSARILY COMPLETE. IT IS THE SOLE RESPONSIBILITY OF THE CONTRACTOR TO INDEPENDENTLY VERIFY THE ACCURACY OF ALL UTILITY LOCATIONS AND TO DISCOVER AND AVOID ANY OTHER UTILITIES NOT SHOWN WHICH MAY BE AFFECTED BY THE IMPLEMENTATION OF THIS PLAN.
8. THE BOUNDARIES OF THE CLEARING LIMITS SHOWN ON THIS PLAN SHALL BE CLEARLY FLAGGED IN THE FIELD PRIOR TO CONSTRUCTION. DURING THE CONSTRUCTION PERIOD, NO DISTURBANCE BEYOND THE FLAGGED CLEARING LIMITS SHALL BE PERMITTED. THE FLAGGING SHALL BE MAINTAINED BY THE APPLICANT/CONTRACTOR FOR THE DURATION OF CONSTRUCTION.
9. CLEARING SHALL BE LIMITED TO THE AREAS WITHIN THE APPROVED DISTURBANCE LIMITS. EXPOSED SOILS MUST BE COVERED AT THE END OF EACH WORKING DAY WHEN WORKING FROM OCTOBER 1ST THROUGH APRIL 30TH. FROM MAY 1ST THROUGH SEPTEMBER 30TH, EXPOSED SOILS MUST BE COVERED AT THE END OF EACH CONSTRUCTION WEEK AND ALSO AT THE THREAT OF RAIN.
10. AT NO TIME SHALL MORE THAN ONE FOOT OF SEDIMENT BE ALLOWED TO ACCUMULATE WITHIN A TRAPPED CATCH BASIN. ALL CATCH BASINS AND CONVEYANCE LINES SHALL BE CLEANED PRIOR TO PAVING. THE CLEANING OPERATION SHALL NOT FLUSH SEDIMENT LADEN WATER INTO THE DOWNSTREAM SYSTEM.
11. STABILIZED CONSTRUCTION ENTRANCES SHALL BE INSTALLED AT THE BEGINNING OF CONSTRUCTION AND MAINTAINED FOR THE DURATION OF THE PROJECT.
12. THE CONTRACTOR MUST MAINTAIN A SWEEPER ON SITE DURING EARTHWORK AND IMMEDIATELY REMOVE SOIL THAT HAS BEEN TRACKED ONTO PAVED AREAS AS RESULT OF CONSTRUCTION.
13. THE ESC FACILITIES SHALL BE INSPECTED DAILY BY THE APPLICANT/CONTRACTOR AND MAINTAINED AS NECESSARY TO ENSURE THEIR CONTINUED FUNCTIONING.
14. ANY EXCAVATED MATERIAL REMOVED FROM THE CONSTRUCTION SITE AND DEPOSITED ON PROPERTY WITHIN THE CITY LIMITS MUST BE DONE IN COMPLIANCE WITH A VALID CLEARING & GRADING PERMIT. LOCATIONS FOR THE MOBILIZATION AREA AND STOCKPILED MATERIAL MUST BE APPROVED BY THE CLEARING AND GRADING INSPECTOR AT LEAST 24 HOURS IN ADVANCE OF ANY STOCKPILING.
15. THE ESC FACILITIES ON INACTIVE SITES SHALL BE INSPECTED AND MAINTAINED A MINIMUM OF ONCE A MONTH OR WITHIN THE 48 HOURS FOLLOWING A MAJOR STORM EVENT.
16. FINAL SITE GRADING MUST DIRECT DRAINAGE AWAY FROM ALL BUILDING STRUCTURES AT A MINIMUM 5% SLOPE, PER THE INTERNATIONAL RESIDENTIAL CODE (IRC) R401.3

REV	DATE	BY	DESCRIPTION

SCALE: 1" = 30'

WARNING: 0 ½ 1 — IF THIS BAR DOES NOT MEASURE 1" THEN DRAWING IS NOT TO SCALE

DESIGNED Q DENG
DRAWN P PAWAR
CHECKED C SMITH

FOR PERMIT REVIEW ONLY - APRIL 13, 2016

NOT FOR CONSTRUCTION
This document is an interim document and not suitable for construction. As an interim document, it may contain data that is potentially inaccurate or incomplete and is not to be relied upon without the express written consent of the preparer.

MWH®

CITY OF BELLEVUE UTILITIES
MIDLAKES PUMP STATION CAPACITY IMPROVEMENTS

MIDLAKES PUMP STATION CAPACITY IMPROVEMENTS
CIVIL
EASEMENTS, EROSION AND SEDIMENT CONTROL, STORM WATER MANAGEMENT

SHEET C-3
10505461

C:\pwworkdir\d0194369\MLPS_WWPS_C-3.dwg | Layout: C-3
PLOTTED: Apr 13, 2016-09:34:25am By: friskar
XREFS: MLPS_WWPS_Border.dwg; MLPS_ESC MDL.dwg; MWH_Civil_Site.dwg; MLPS01M_Plan00.dwg; MLPS_WWPS_A_PLAN0.dwg; MLPS01M_Generator.dwg; MLPS_GradingMDL.dwg
IMAGES:

SITE KEY PLAN

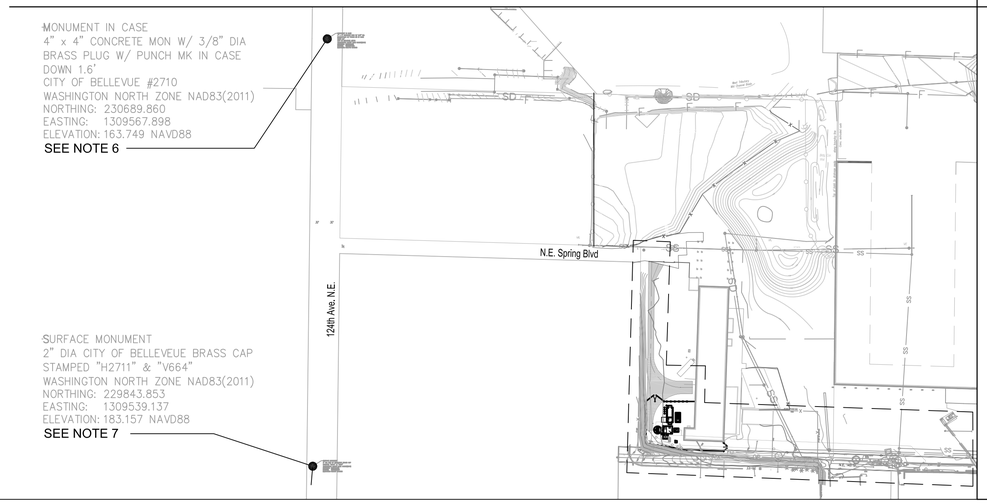

GENERAL SHEET NOTES

1. REFER TO SECTION DEMOLITION AND RECONSTRUCTION FOR FURTHER INFORMATION ON REUSE OF EXISTING PUMP STATION WET WELL AND DEMOLITION OF REMAINING FACILITIES.
2. CUT AND CAP EXISTING 10"FM AFTER CONNECTION OF THE NEW FM FILL ABANDONED FM TO WEST WITH CDF TO EXISTING WET WELL
3. REMOVE EQUIPMENT LISTED FOR SALVAGE, THEN DEMOLISH REMAINING STRUCTURES.
4. AFTER REMOVING BACK FLOW PREVENTER, CAP ENDS OF UNUSED PORTION OF 1" W PIPE AND ABANDON. REMOVE SERVICE FROM MAIN AND REPAIR.
5. BACKFILL AND GRADE AREA FOLLOWING VAULT REMOVAL. REPAIR AREAS DISTURBED BY DEMOLITION WORK.
6. BENCHMARK LOCATED ON 124TH AVE NE, APPROXIMATELY 800 FT NW OF CITY PARCEL.
7. BENCHMARK LOCATED ON 124TH AVE NE, APPROXIMATELY 700 FT SW OF CITY PARCEL.
8. AFTER CONNECTION OF THE NEW FM TO EXISTING FM, REMOVE THE EXISTING VALVE.

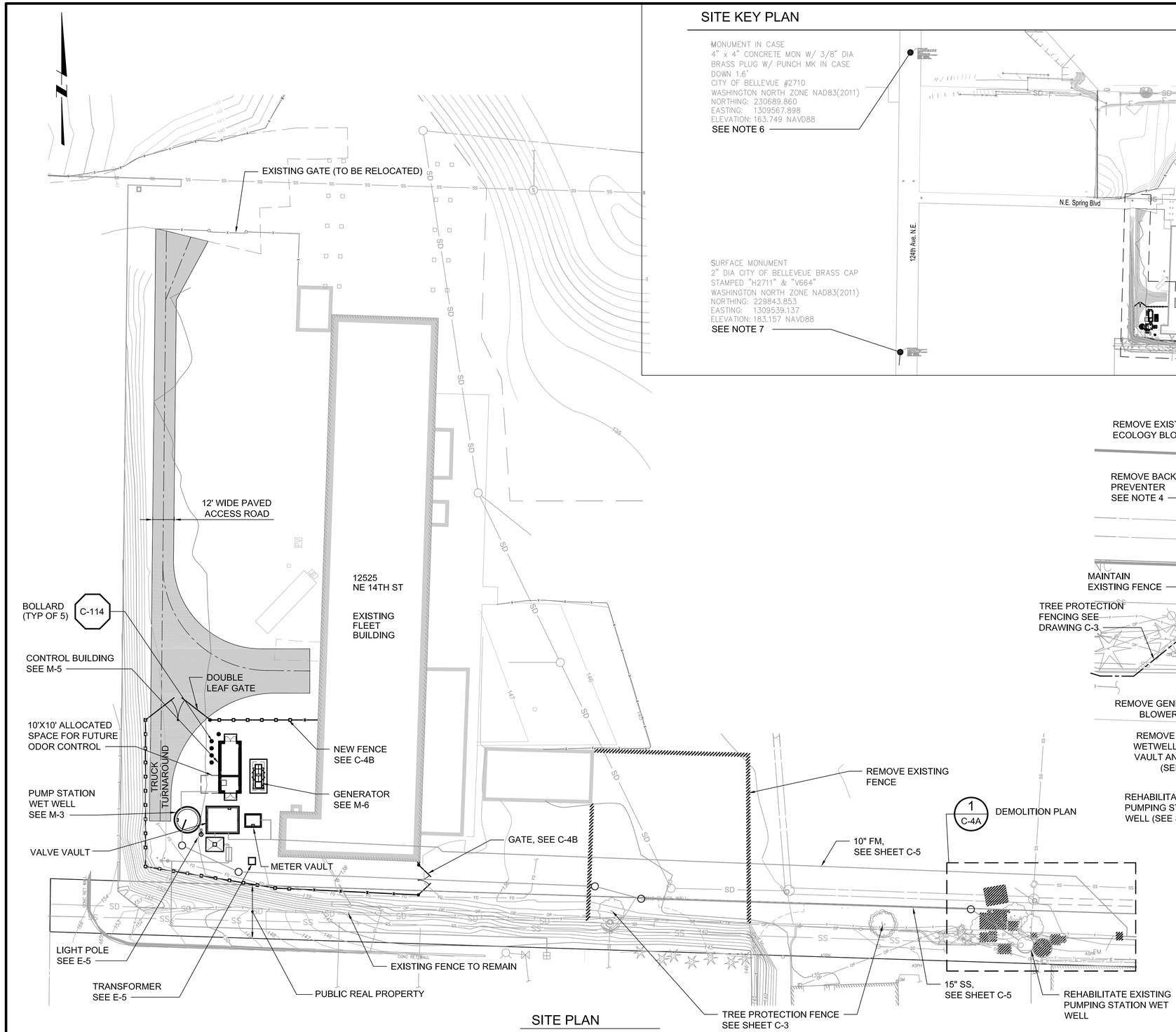

SITE PLAN

SCALE: 1" = 30'-0"

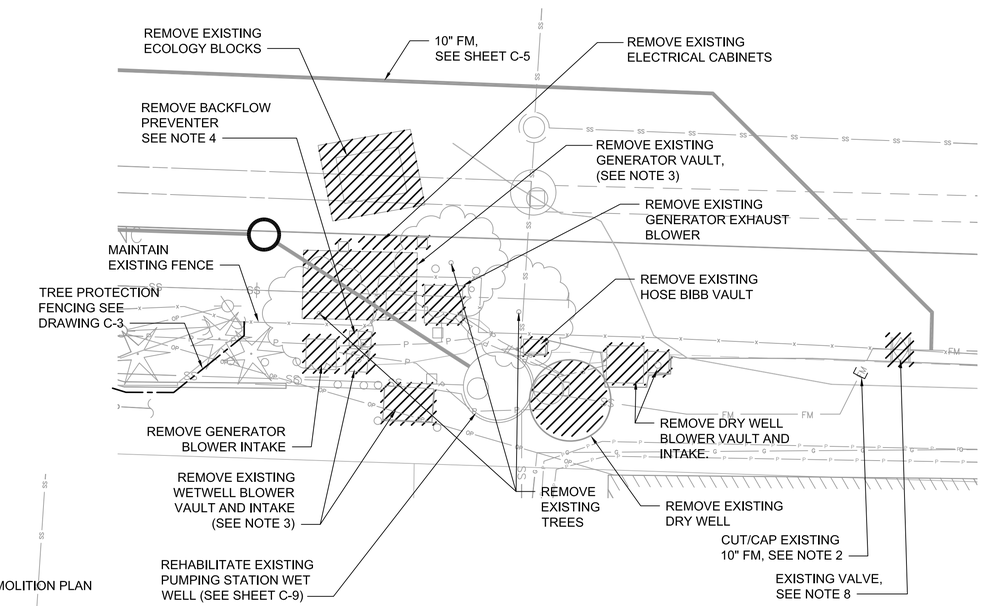

1 - DEMOLITION PLAN

SCALE: 1" = 30'-0"

REV	DATE	BY	DESCRIPTION

SCALE: AS NOTED

WARNING: 0 ½ 1 — IF THIS BAR DOES NOT MEASURE 1" THEN DRAWING IS NOT TO SCALE

DESIGNED S RADFORD
DRAWN P PAWAR
CHECKED G HARRIS

FOR PERMIT REVIEW ONLY - APRIL 13, 2016

NOT FOR CONSTRUCTION

This document is an interim document and not suitable for construction. As an interim document, it may contain data that is potentially inaccurate or incomplete and is not to be relied upon without the express written consent of the preparer.

MWH®

CITY OF BELLEVUE UTILITIES
MIDLAKES PUMP STATION CAPACITY IMPROVEMENTS

MIDLAKES PUMP STATION CAPACITY IMPROVEMENTS
CIVIL
SITE LAYOUT AND DEMOLITION PLAN

SHEET C-4A

10505461

C:\pwworkdir\d0194369\MLPS_WWPS_C-4A.dwg | Layout: C-4A
PLOTTED: Apr 13, 2016-08:14:24am By: friskar
XREFS: MLPS_WWPS_Border.dwg; MWH_Civil_Site.dwg; MLPS01M_Plan00.dwg; MLPS_WWPS_A_PLAN0.dwg; MLPS01M_Generator.dwg; MLPS_WWPS_GradingMDL.dwg; MLPS_WWPS_C_PIPING_C3D.dwg
IMAGES:

GENERAL SHEET NOTES

1. REFER TO SHEET C-8 FOR CONTROL POINTS DATA.
2. GATE SHALL EXTEND TO THE SE CORNER OF THE EXISTING FLEET BUILDING.

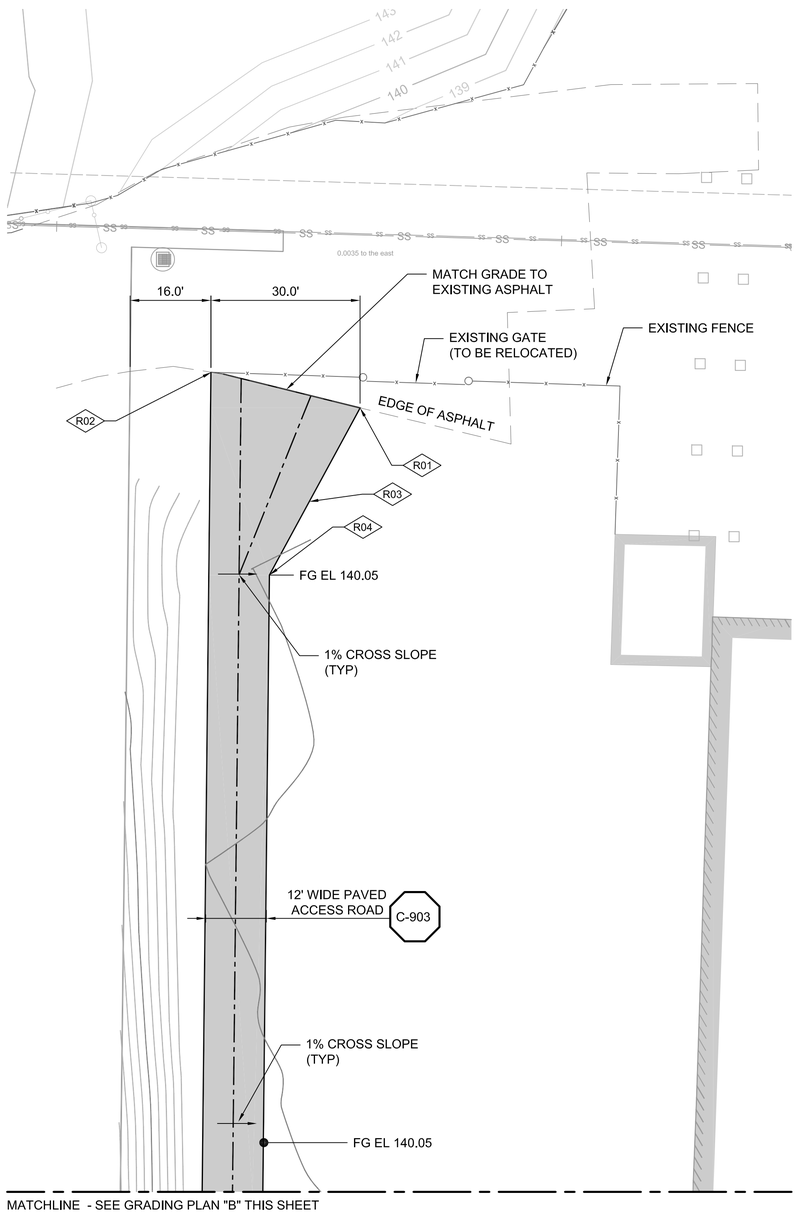

PLAN A

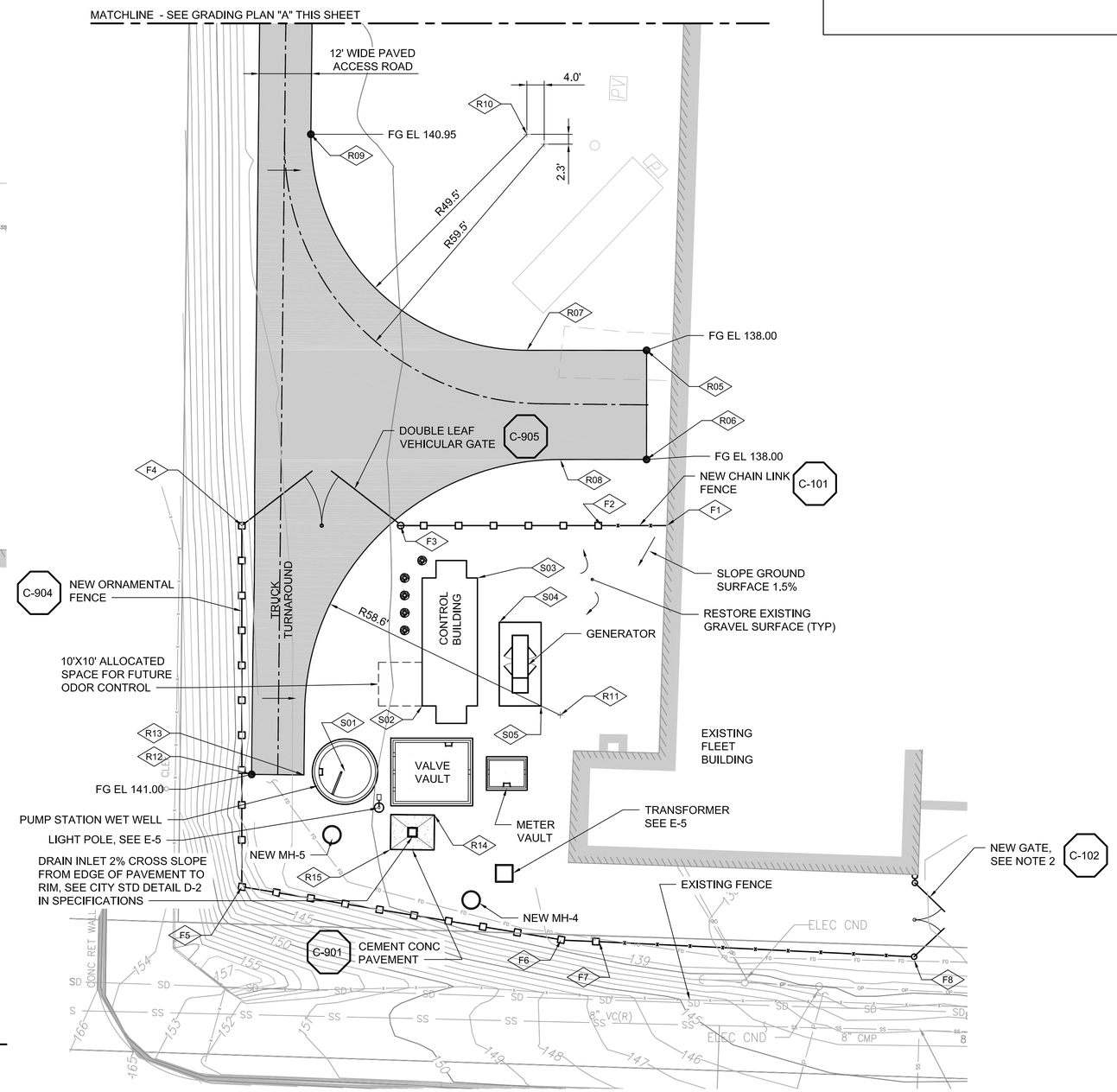

PLAN B

REV	DATE	BY	DESCRIPTION

SCALE: 1" = 15'

WARNING: 0 ½ 1 — IF THIS BAR DOES NOT MEASURE 1" THEN DRAWING IS NOT TO SCALE

DESIGNED Q DENG
DRAWN P PAWAR
CHECKED C SMITH

FOR PERMIT REVIEW ONLY - APRIL 13, 2016

NOT FOR CONSTRUCTION
This document is an interim document and not suitable for construction. As an interim document, it may contain data that is potentially inaccurate or incomplete and is not to be relied upon without the express written consent of the preparer.

MWH®

CITY OF BELLEVUE UTILITIES
MIDLAKES PUMP STATION CAPACITY IMPROVEMENTS

MIDLAKES PUMP STATION CAPACITY IMPROVEMENTS
CIVIL
SITE PLAN AND GRADING

SHEET C-4B
10505461

C:\pwworkdir\d0194369\MLPS_WWPS_C-4B.dwg | Layout: Layout1
PLOTTED: Apr 13, 2016-08:56:41am By friskar
XREFS: MLPS_WWPS_Border.dwg; MLPS_WWPS_C_PIPING_C3D.dwg; MWH_Civil_Site.dwg; MLPS01M_Plan00.dwg; MLPS_WWPS_A_PLAN0.dwg; MLPS01M_Generator.dwg; MLPS01M_GradingMDL.dwg
IMAGES:

SITE PLAN

SCALE: 1" = 30'-0"

REV	DATE	BY	DESCRIPTION

SCALE: AS NOTED

WARNING: 0 ½ 1 — IF THIS BAR DOES NOT MEASURE 1" THEN DRAWING IS NOT TO SCALE

DESIGNED Q DENG
DRAWN P PAWAR
CHECKED C SMITH

FOR PERMIT REVIEW ONLY - APRIL 13, 2016

NOT FOR CONSTRUCTION

This document is an interim document and not suitable for construction. As an interim document, it may contain data that is potentially inaccurate or incomplete and is not to be relied upon without the express written consent of the preparer.

MWH®

CITY OF BELLEVUE UTILITIES
MIDLAKES PUMP STATION CAPACITY IMPROVEMENTS

MIDLAKES PUMP STATION CAPACITY IMPROVEMENTS
CIVIL
SLOPE CATEGORIES

SHEET
C-4C
10505461

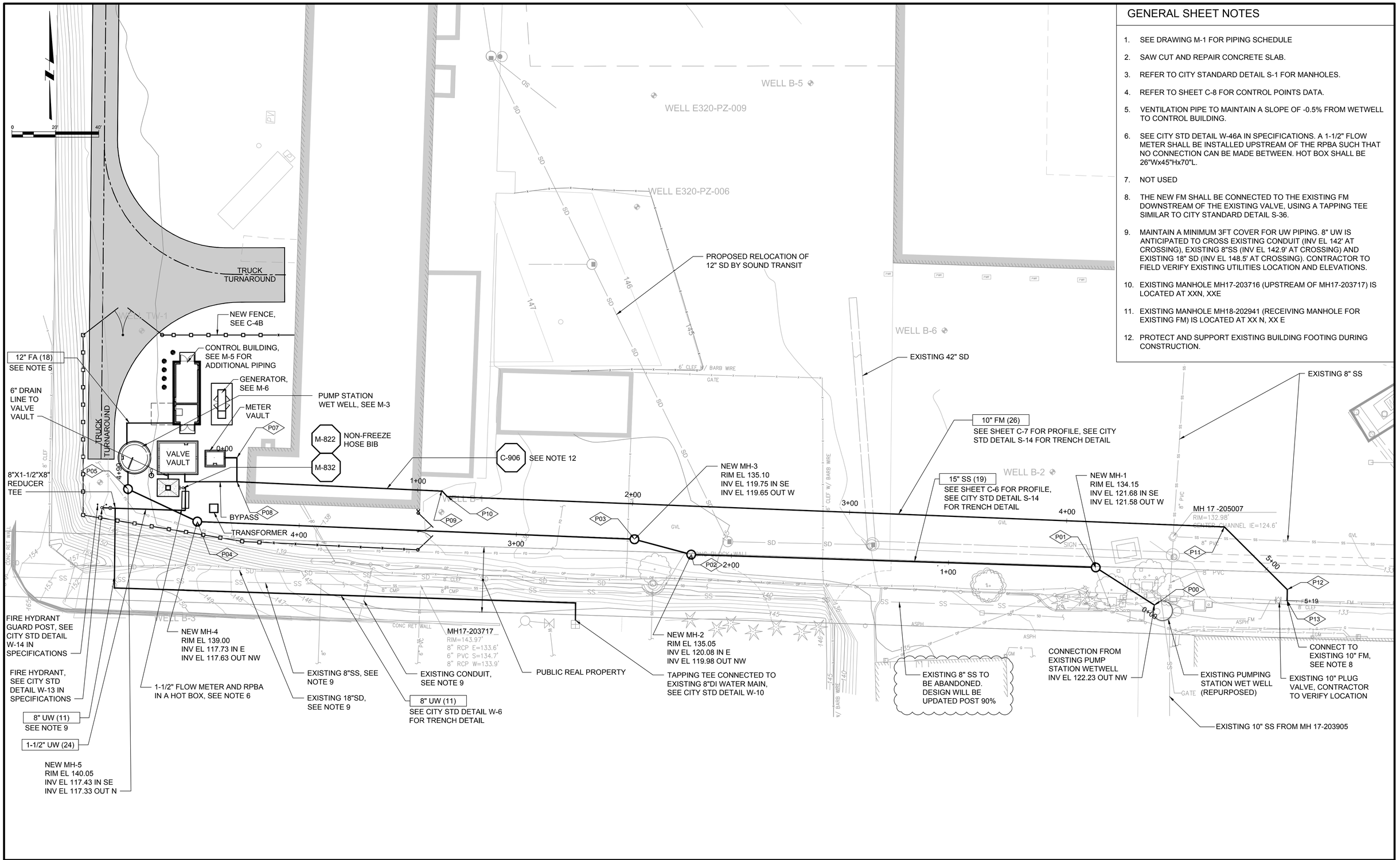

GENERAL SHEET NOTES

1. SEE DRAWING M-1 FOR PIPING SCHEDULE
2. SAW CUT AND REPAIR CONCRETE SLAB.
3. REFER TO CITY STANDARD DETAIL S-1 FOR MANHOLES.
4. REFER TO SHEET C-8 FOR CONTROL POINTS DATA.
5. VENTILATION PIPE TO MAINTAIN A SLOPE OF -0.5% FROM WETWELL TO CONTROL BUILDING.
6. SEE CITY STD DETAIL W-46A IN SPECIFICATIONS. A 1-1/2" FLOW METER SHALL BE INSTALLED UPSTREAM OF THE RPBA SUCH THAT NO CONNECTION CAN BE MADE BETWEEN. HOT BOX SHALL BE 26"Wx45"Hx70"L.
7. NOT USED
8. THE NEW FM SHALL BE CONNECTED TO THE EXISTING FM DOWNSTREAM OF THE EXISTING VALVE, USING A TAPPING TEE SIMILAR TO CITY STANDARD DETAIL S-36.
9. MAINTAIN A MINIMUM 3FT COVER FOR UW PIPING. 8" UW IS ANTICIPATED TO CROSS EXISTING CONDUIT (INV EL 142' AT CROSSING), EXISTING 8"SS (INV EL 142.9' AT CROSSING) AND EXISTING 18" SD (INV EL 148.5' AT CROSSING). CONTRACTOR TO FIELD VERIFY EXISTING UTILITIES LOCATION AND ELEVATIONS.
10. EXISTING MANHOLE MH17-203716 (UPSTREAM OF MH17-203717) IS LOCATED AT XXN, XXE
11. EXISTING MANHOLE MH18-202941 (RECEIVING MANHOLE FOR EXISTING FM) IS LOCATED AT XX N, XX E
12. PROTECT AND SUPPORT EXISTING BUILDING FOOTING DURING CONSTRUCTION.

REV	DATE	BY	DESCRIPTION

SCALE: 1" = 20'

WARNING: 0 ½ 1 — IF THIS BAR DOES NOT MEASURE 1" THEN DRAWING IS NOT TO SCALE

DESIGNED Q DENG
DRAWN S STARK
CHECKED -

CONSTRUCTION DOCUMENT PHASE - 90%

NOT FOR CONSTRUCTION
This document is an interim document and not suitable for construction. As an interim document, it may contain data that is potentially inaccurate or incomplete and is not to be relied upon without the express written consent of the preparer.

MWH®

CITY OF BELLEVUE UTILITIES
MIDLAKES PUMP STATION CAPACITY IMPROVEMENTS

MIDLAKES PUMP STATION CAPACITY IMPROVEMENTS
CIVIL
SITE PIPING PLAN

SHEET C-5
10505461

C:\pwworkdir\d0194369\MLPS_WWPS_C-5.dwg | Layout: Layout1
PLOTTED: Apr 08, 2016-04:36:13pm By richardce
XREFS: MLPS_WWPS_Border.dwg; MLPS_WWPS_C_PIPING_C3D.dwg; __Civil Site Plan prints.dwg; MWH_Civil_Site.dwg; MLPS01M_Plan00.dwg; MLPS_WWPS_A_PLAN0.dwg; MLPS01M_Generator.dwg; MLPS_WWPS_GradingMDL.dwg
IMAGES:

TABLE 1			
COORDINATES			
PT NO.	NORTH	EAST	DESCRIPTION
S01	229972.1301	1310295.8478	CENTER OF PUMP STATION WETWELL
S02	229972.1301	1310280.0978	CONTROL BUILDING
S03	229972.1301	1310234.8224	CONTROL BUILDING
S04	229972.1301	1310198.4172	STANDBY GENERATOR CONCRETE PAD
S05	229889.3586	1310198.4273	STANDBY GENERATOR CONCRETE PAD

TABLE 2			
ACCESS ROAD - C-4B			
COORDINATES			
PT NO.	NORTH	EAST	DESCRIPTION
R01	230242.4009	1310233.7649	ACCESS ROAD
R02	230249.4769	1310204.2388	ACCESS ROAD
R03	230224.3439	1310223.9707	ACCESS ROAD
R04	230209.2968	1310215.8090	ACCESS ROAD
R05	230012.2858	1310291.1694	ACCESS ROAD TRUCK TURNAROUND
R06	229987.2858	1310291.1694	ACCESS ROAD TRUCK TURNAROUND
R07	230012.2858	1310263.7391	ACCESS ROAD TRUCK TURNAROUND
R08	229987.2773	1310271.4021	ACCESS ROAD TRUCK TURNAROUND
R09	230061.7858	1310214.2391	ACCESS ROAD
R10	230061.7858	1310263.7391	ACCESS ROAD RADIUS CENTER
R11	229928.6773	1310271.4021	ACCESS ROAD RADIUS CENTER
R12	229915.1173	1310200.6562	ACCESS ROAD
R13	229914.9887	1310212.6555	ACCESS ROAD

TABLE 3				
15" SS - GRAVITY SEWER FROM EXISTING WETWELL TO NEW PS - C-8				
COORDINATES				
PT NO.	STATION	NORTHING	EASTING	DESCRIPTION
P00	0+00	229847.81	1310691.57	BEGIN PIPE IN EXISTING WETWELL
P01	0+32.24	229864.87	1310664.20	CENTER OF MH-1
P02	2+18.50	229871.16	1310478.28	CENTER OF MH-2
P03	2+45.55	229878.19	1310452.15	CENTER OF MH-3
P04	4+46.89	229886.33	1310250.97	CENTER OF MH-4
P05	4+82.12	229901.28	1310219.07	CENTER OF MH-5

TABLE 4				
10" FM - FORCEMAIN FROM NEW PS TO EXISTING FM - C-8				
COORDINATES				
PT NO.	STATION	NORTHING	EASTING	DESCRIPTION
P06	0+00.00	229904.64	1310245.21	90 DEG ELBOW
P07	0+05.70	229915.66	1310269.18	90 DEG ELBOW
P08	0+16.73	229904.64	1310269.18	10" TEE
P09	1+11.34	229900.29	1310363.70	FORCE MAIN
P10	1+14.67	229897.86	1310365.98	FORCE MAIN
P11	4+72.63	229883.85	1310723.66	45 DEG ELBOW
P12	5+13.51	229854.97	1310752.60	45 DEG ELBOW
P13	5+19.00	229850.00	1310752.50	10X10 TAPPING TEE, CONNECTION TO EXISTING 10" FM

TABLE 5			
NEW FENCE - C-4B			
COORDINATES			
PT NO.	NORTH	EAST	DESCRIPTION
F01	229972.1301	1310295.8478	CHAIN LINK FENCE
F02	229972.1301	1310280.0978	ORNAMENTAL FENCE
F03	229972.1301	1310234.8224	DOUBLE LEAF VEHICULAR GATE
F04	229972.1301	1310198.4172	DOUBLE LEAF VEHICULAR GATE
F05	229889.3586	1310198.4273	ORNAMENTAL FENCE
F06	229877.2375	1310271.5974	ORNAMENTAL FENCE
F07	229876.8146	1310279.5662	ORNAMENTAL FENCE
F08	229873.3506	1310352.4876	CHAIN LINK FENCE GATE

C:\pwworkdir\d0194369\MLPS_WWPS_C-8.dwg | Layout: Layout1
PLOTTED: Apr 08, 2016-04:29:09pm By richardce
XREFS: MLPS_WWPS_Border.dwg
IMAGES:

REV	DATE	BY	DESCRIPTION

SCALE: NONE

WARNING: 0 ½ 1 — IF THIS BAR DOES NOT MEASURE 1" THEN DRAWING IS NOT TO SCALE

DESIGNED Q DENG
DRAWN S STARK
CHECKED -

CONSTRUCTION DOCUMENT PHASE - 90%

NOT FOR CONSTRUCTION

This document is an interim document and not suitable for construction. As an interim document, it may contain data that is potentially inaccurate or incomplete and is not to be relied upon without the express written consent of the preparer.

MWH®

CITY OF BELLEVUE UTILITIES
MIDLAKES PUMP STATION CAPACITY IMPROVEMENTS

MIDLAKES PUMP STATION CAPACITY IMPROVEMENTS
CIVIL
FACILITIES AND YARD PIPING CONTROL DATA

SHEET C-8

10505461

FLUID ABBREVIATION	FUNCTION THIS LIST INCLUDES SOME LINES NOT USED IN THIS PROJECT (* SEE NOTE 5)	PIPING MATERIALS (SEE SCH AT RIGHT) EXPOSED PIPING (SEE NOTE 14) 4" DIA AND SMALLER	EXPOSED PIPING 6" DIA AND LARGER	BURIED PIPING (SEE NOTE 13) 4" DIA AND SMALLER	BURIED PIPING 6" DIA AND LARGER	FIELD TEST REQUIREMENTS (SEE NOTE 3 AND NOTE 4) MINIMUM TEST PRESSURE PSI	TEST MEDIUM	LEAKAGE ALLOWANCE (SEE NOTE 2)
FA	FOUL AIR	--	18	--	18	10	AIR	(A)(D)
FM	FORCE MAIN	--	26	--	26	125	WATER	(A)
PD	DRAIN	16	16	16	16	NOTE 6	WATER	(A)
SPD	SUMP PUMP DISCHARGE	16	16, 26	16	16, 26	50	WATER	(A)
SS	SANITARY SEWER	--	19	--	19	NOTE 7	WATER	(B)
UW	UTILITY WATER (NON-POTABLE WATER)	24	11	24	11	125	WATER	11,24(A) 19(B)

PIPING MATERIAL SCH (SEE NOTE 4 AND GENERAL NOTE AT RIGHT)

GROUP NO	PIPE (SEE NOTE 13)	FITTINGS	VALVES, 6" AND SMALLER (SEE NOTE 1, 11 & 16)
11	DUCTILE IRON, ANSI A21.51, (AWWA C151 AND MODIFIED PER SECTION 02565), ENDS BELL AND SPIGOT, MECH. JOINTS OR 125 PSI FLGD. (TYPICAL SERVICE - WATER LINES).	DUCTILE IRON AWWA C110 AND MODIFIED PER SECTION 02565, BELL AND SPIGOT JOINTS (RESTRAINT OR NON-RESTRAINT), MECH CPLNG, FLGD OR MECH JTS, 250 PSI ,(PRESS. RATING) 12" AND SMALLER, 150 PSI, (PRESS. RATING) 14" AND LARGER, WITH 125 PSI ASME B16.1 FLANGES. FOR HIGHER PRESS. RATING, REFER TO MFTR CATALOG.	GATE: AWWA C500, O-RING SEALS, MECHANICAL JOINT ENDS, CLOW F-5065. BUTTERFLY: AWWA, ECCNETRIC PLUG DEZURIK PEC, CAST IRON OR MILLIKEN 603E. BALL: PRATT OR APCO-WILLAMETTE. AS INDICATED ON DRAWINGS.
16	POLYVINYL CHLORIDE, SCHEDULE 80, NORMAL IMPACT. ASTM D1785, (SEE NOTE 18).	POLYVINYL CHLORIDE, SCH 80, NORMAL IMPACT, SOCKET SOLVENT WELD JOINTS, ASTM D2467. SOLVENT SHALL BE COMPATIBLE WITH FLUID SERVICE	POLYVINYL CHLORIDE, BALL, DIAPHRAGM, BUTTERFLY, OR LIFT CHECK: NIBCO/CHEMTROL, MCCANNA-MARPAC, OR GEORGE FISCHER SLOANE.
18	FIBERGLASS REINFORCED PLASTIC, ASTM D2996, FILAMENT-WOUND, SOCKET AND SPIGOT ENDS, ADHESIVE BONDED.	FIBERGLASS REINFORCED PLASTIC, FILAMENT-WOUND, SOCKET ENDS, ADHESIVE BONDED, OR FIBERGLASS FLGD.	PLASTIC LINED, FLANGED, FLANGES TO MATCH 150 PSI ASME B16.5 DIMENSIONS, OR AS INDICATED ON DRAWINGS.
19	POLYVINYL CHLORIDE PRESSURE PIPE AWWA C900 (4"-12") OR AWWA C905 (14"-48") WITH BELL AND SPIGOT JOINTS.	--------	--------
24	LEAD FREE COPPER, ASTM B88, TYPE K, SOFT TEMPERED WHERE BURIED, HARD TEMPERED WHERE EXPOSED.	LEAD FREE WROUGHT COPPER OR CAST BRONZE, ASME B16.22, SILVER SOLDER JOINT, 150 PSI, OR COMPRESSION FITTINGS. (FOR COMPRESSED AIR PIPING USE 95-5 TIN-ANTIMONY SOLDER)	BRONZE, SILVER SOLDER JOINT, GLOBE: CRANE #1310 OR STOCKHAM B-14T. CHECK: CRANE #1342 OR 36, OR STOCKHAM B-309Y OR B-345. GATE: CRANE #426 OR STOCKHAM B-104 OR B-105.
26	SAME AS GROUP NO. 11 (TYPICAL SERVICE - SLUDGE AND SEWAGE LINES)	SAME AS GROUP NO. 11.	ECCENTRIC PLUG, SYNTHETIC RUBBER FACED: DEZURIK PEC, CAST IRON OR MILLIKEN 601. SWING TYPE CHECK: CRANE #383 OR POWELL FIG 559. BALL: PRATT OR APCO-WILLAMETTE.

LIST OF SAMPLE LINES

PIPE DESIGNATION	SAMPLE POINT

TYPICAL PIPE DESIGNATION:

2" UW (24)

MATERIAL GROUP NUMBER (SEE NOTE 12)

PIPE DIAMETER

FLUID ABBREVIATION

NOTES:

GENERAL NOTE
ALTHOUGH SEVERAL PIPE MATERIAL GROUPS MAY BE LISTED ON THIS SHEET FOR A GIVEN FLUID SERVICE, CONTRACTOR SHALL PROVIDE ONLY THE PIPE MATERIAL GROUP SHOWN ON THE DRAWINGS AND SPECIFIED FOR THAT FLUID SERVICE.

NOTE 1
PROPRIETARY NAMES HAVE BEEN QUOTED FOR IDENTIFICATION PURPOSES ONLY. SUBSTITUTIONS WILL BE PERMITTED SUBJECT TO PROVISIONS OF THE SPECIFICATIONS.

NOTE 2
LEAKAGE ALLOWANCE IS AS FOLLOWS:

(A) PIPES SO DESIGNATED SHALL SHOW ZERO LEAKAGE.
(B) PIPES SO DESIGNATED SHALL SHOW ZERO LEAKAGE FOR UNBURIED PIPE AND NOT MORE THAN 0.02 GALLON PER HOUR PER INCH DIAMETER PER 100 FEET OF BURIED PIPE.
(C) PIPES SO DESIGNATED SHALL NOT SHOW A LEAKAGE OF MORE THAN 0.15 GALLON PER HOUR PER INCH OF DIAMETER PER 100 FEET OF PIPE
(D) PIPES SO DESIGNATED SHALL NOT SHOW A LOSS OF PRESSURE OF MORE THAN 5 PERCENT
(E) PIPE SO DESIGNATED SHALL NOT SHOW A LOSS OF VACUUM OF MORE THAN 4 INCHES MERCURY COLUMN

NOTE 3
FOR FIELD TEST PROCEDURES AND ADDITIONAL TEST REQUIREMENTS, SEE PIPING SECTION OF SPECIFICATIONS.

NOTE 4
NO SUBSTITUTIONS UNLESS ACCEPTED BY THE ENGINEER PER THE SPECIFICATIONS.

NOTE 5
PIPING GROUP NUMBER SHOWN THUS * SHALL BE INSULATED. SEE PIPING SECTION OF SPECIFICATIONS FOR INSULATING MATERIALS.

NOTE 6
STATIC WATER TEST WITH SURFACE 5 FEET ABOVE HIGH POINT OF PIPE.

NOTE 7
INSPECTION AND TESTING SHALL BE IN ACCORDANCE WITH APPLICABLE PLUMBING CODE.

NOTE 8
NO APPARENT LEAKS UNDER NORMAL OPERATING CONDITIONS.

NOTE 9
INSPECTION AND TESTING SHALL BE IN ACCORDANCE WITH APPLICABLE NATIONAL FIRE PROTECTION ASSOCIATION STANDARDS.

NOTE 10
PIPING MATERIALS SHALL BE IN ACCORDANCE WITH NATIONAL FIRE PROTECTION ASSOCIATION STANDARDS.

NOTE 11
FOR VALVES 8" AND LARGER SEE VALVE SCH FOR SPECIAL VALVES SEE SPECIFICATIONS.

NOTE 12
CHANGE IN PIPING MATERIAL GROUP NUMBER IS INDICATED THUS: ——◆

NOTE 13
FOR PIPE LINING AND COATING, SEE SPECIFICATIONS.

NOTE 14
EXPOSED PIPING SHALL BE PAINTED IN ACCORDANCE WITH SPECIFICATIONS. COLORS TO BE SELECTED BY ENGINEER.

NOTE 16
FOR VALVE ENDS, SEE SPECIFICATIONS

REV	DATE	BY	DESCRIPTION

SCALE: NO SCALE

WARNING: 0 ½ 1 — IF THIS BAR DOES NOT MEASURE 1" THEN DRAWING IS NOT TO SCALE

DESIGNED J TORRE
DRAWN S UBHALKAR
CHECKED -

CONSTRUCTION DOCUMENT PHASE - 90%

NOT FOR CONSTRUCTION
This document is an interim document and not suitable for construction. As an interim document, it may contain data that is potentially inaccurate or incomplete and is not to be relied upon without the express written consent of the preparer.

MWH®

CITY OF BELLEVUE UTILITIES
MIDLAKES PUMP STATION CAPACITY IMPROVEMENTS

MIDLAKES PUMP STATION CAPACITY IMPROVEMENTS
GENERAL
PIPING SCHEDULE

SHEET M-1
10505461

C:\pwworkdir\d0194383\MLPS_WWPS_M-1.dwg | Layout: Layout1
PLOTTED: Apr 08, 2016-11:23:46am By dyocon]
XREFS: MLPS_WWPS_Border.dwg; PipeSch-WasteWater REV 011309.dwg
IMAGES:

GENERAL NOTES

GENERAL

1. PROCESS MECHANICAL EQUIPMENT AND PIPING LOCATIONS, DIMENSIONS, AND LAYOUTS ARE BASED ON THE EQUIPMENT SELECTED AND SPECIFIED BY THE ENGINEER. IF THE CONTRACTOR PROPOSES TO FURNISH EQUIPMENT THAT REQUIRES AN ARRANGEMENT OR SPACE OTHER THAN THAT INDICATED ON THE DRAWINGS OR AS SPECIFIED, THE CONTRACTOR SHALL PREPARE AND SUBMIT TO THE ENGINEER FOR APPROVAL DETAILED DRAWINGS AND EQUIPMENT LISTS (FOR IMPACTED DISCIPLINES) SHOWING EQUIPMENT AND PIPING LOCATIONS, DIMENSIONS, AND LAYOUTS PROPOSED. THIS INFORMATION SHALL INCLUDE, BUT NOT BE LIMITED TO, PLANS, SECTIONS, DETAILS, AND SCHEMATICS OF EQUIPMENT AND APPURTENANCES REQUIRED. THE CONTRACTOR SHALL PROVIDE DETAILS OF CHANGES TO ADJACENT PIPE ROUTING TO ACCOMMODATE TIE-IN LOCATIONS FOR PROPOSED EQUIPMENT.
2. OTHER DISCIPLINE BACKGROUND DRAWINGS AND DIMENSIONS SHOWN ON THE PROCESS MECHANICAL DRAWINGS ARE FOR REFERENCE ONLY. THE CONTRACTOR SHALL CLARIFY DISCREPANCIES BETWEEN DISCIPLINES WITH THE ENGINEER PRIOR TO THE FABRICATION OR CONSTRUCTION..
3. EQUIPMENT FOUNDATION AND PAD DIMENSIONS SHOWN ON THE PROCESS MECHANICAL DRAWINGS ARE APPROXIMATE. THE CONTRACTOR SHALL COORDINATE EQUIPMENT PAD DIMENSIONS WITH THE MANUFACTURER TO ACCOMMODATE THE ACTUAL SIZE OF EQUIPMENT FURNISHED (AS SHOWN ON THE APPROVED SHOP DRAWINGS) AND AVAILABLE SPACE. REFER TO THE STRUCTURAL DRAWINGS AND STRUCTURAL STANDARD DETAILS FOR EQUIPMENT PAD DESIGN REQUIREMENTS.
4. EQUIPMENT BASES HAVING DRAIN OUTLETS, EQUIPMENT DRAINS, AND PIPING DRAINS SHALL BE PIPED WITH A CONTINUOUS SLOPE TO THE NEAREST FLOOR DRAIN, FLOOR SINK, HUB DRAIN, OR TRENCH DRAIN. DRAIN PIPE NOMINAL DIAMETER AND MATERIAL SHALL BE PER THE EQUIPMENT MANUFACTURER'S RECOMMENDATIONS. DRAIN PIPING SHALL BE SUITABLY SUPPORTED AND ROUTED IN SUCH A MANNER TO AVOID TRIP HAZARDS.
5. WHERE WELDING OF STAINLESS STEEL IS REQUIRED, PASSIVATE STAINLESS STEEL AFTER WELDING.

PIPING

1. CONTRACTOR SHALL PROVIDE INTERCONNECTING PIPING, FITTINGS, WALL PIPES, AND PIPE SUPPORTS (INCLUDING THOSE REQUIRED FOR INSTRUMENTS, DRAINS, AND OTHER APPURTENANCES) AS REQUIRED FOR A COMPLETE PROCESS MECHANICAL PIPING SYSTEM.
2. FOR CLARITY, SMALL DIAMETER PROCESS PIPING MAY NOT BE SHOWN IN ITS ENTIRETY. THE CONTRACTOR SHALL REFER TO THE CONTRACT DOCUMENTS TO DETERMINE THE NEW WORK ASSOCIATED WITH EACH PIPING SYSTEM TO COMPLETE THE WORK.
3. PROCESS MECHANICAL PIPING SYSTEMS AND EQUIPMENT SHALL BE INSTALLED IN SUCH A WAY TO BE EASILY DISMANTLED AND REMOVED WITHOUT DISTURBING THE REMAINING AND ADJACENT EQUIPMENT, PIPING, AND SUPPORTS.
4. PIPING CONNECTED TO PROCESS MECHANICAL EQUIPMENT SHALL BE INSTALLED AND SUPPORTED SUCH THAT IT DOES NOT IMPART STRAIN ON THE EQUIPMENT.
5. UNLESS OTHERWISE SHOWN, HORIZONTAL REDUCERS INSTALLED IN PIPING SYSTEMS SHALL BE ECCENTRIC (BOTTOM FLAT), HORIZONTAL REDUCERS CONNECTED TO PUMP SUCTIONS SHALL BE ECCENTRIC (TOP FLAT).
6. UNLESS OTHERWISE SHOWN, ELBOWS 2-1/2" AND LARGER SHALL BE STANDARD LONG RADIUS ELBOWS. WHERE REQUIRED IN TIGHT AREAS FOR FIT-UP, USE SHORT RADIUS OR REDUCING ELBOWS.
7. A MINIMUM HEADROOM CLEARANCE HEIGHT OF 7'-6" SHALL BE PROVIDED FOR OVERHEAD PROCESS MECHANICAL PIPING SYSTEMS.
8. SLEEVE COUPLINGS, FLANGED COUPLING ADAPTERS, AND FLEXIBLE COUPLINGS SUBJECT TO A POSITIVE INTERNAL FLUID PRESSURE SHALL BE PROVIDED WITH RESTRAINT SYSTEMS.
9. EXPOSED PIPING SUBJECT TO FREEZING SHALL BE INSULATED AND HEAT TRACED (IF HEAT TRACE IS SPECIFIED), SEE THE SPECIFICATION SECTION 'PIPING , GENERAL' FOR HEAT TRACE AND INSULATION REQUIREMENTS.

PIPE SUPPORTS

1. FOR MATERIALS, SPACING, AND ADDITIONAL REQUIREMENTS RELATED TO PIPE SUPPORTS, SEE THE SPECIFICATION SECTION `PIPE SUPPORTS'.
2. PROVIDE PIPE SUPPORTS REQUIRED FOR A COMPLETE PIPING SYSTEM. PIPE SUPPORTS SHALL BE PROVIDED WHERE REQUIRED BY THE SPECIFICATION SECTION 'PIPE SUPPORTS' AND/OR AT POINTS MARKED ON PLAN VIEW DRAWINGS.
3. WHEN FIBERGLASS OR PVC-COATED PIPE SUPPORT MATERIALS ARE CUT OR DRILLED, THE CUT EXPOSED END OF THE MATERIAL SHALL BE RE-COATED OR SEALED IN ACCORDANCE WITH THE MANUFACTURER'S RECOMMENDATIONS.
4. PIPE SUPPORTS FOR PLASTIC PIPE OR FIBERGLASS PIPE SHALL BE PROVIDED WITH EXTRA WIDE PIPE SADDLES OR METALLIC SHIELDS WITH LOOSE FIT AROUND THE FULL CIRCUMFERENCE OF THE PIPE AT EACH PIPE SUPPORT.
5. PIPE SUPPORTS FOR COPPER PIPE OR TUBING SHALL BE PROVIDED WITH A 2" WIDE BY 1/8" THICK STRIP OF RUBBER FABRIC (OR SIMILAR SUITABLE MATERIAL) AROUND FULL CIRCUMFERENCE OF THE PIPE AT EACH PIPE SUPPORT.
6. SUPPORT STRUT CHANNEL ENDS THAT EXTEND INTO PERSONNEL TRAFFIC AREAS SHALL HAVE PLASTIC END CAPS.

VALVES

1. VALVE ACTUATORS SHALL BE MOUNTED TO ALLOW PROPER OPENING AND CLOSING WITHOUT INTERFERENCE WITH ADJACENT PIPING OR EQUIPMENT. UNLESS INDICATED ON THE DRAWINGS, ORIENTATION OF OPERATORS SHALL BE APPROVED BY THE ENGINEER
2. UNLESS INDICATED ON THE DRAWINGS, REFER TO THE MANUFACTURER'S RECOMMENDATIONS AND PROJECT SPECIFICATIONS REGARDING THE LOCATION OF THE VALVE SEAT (UPSTREAM OR DOWNSTREAM) AND STEM ORIENTATION.

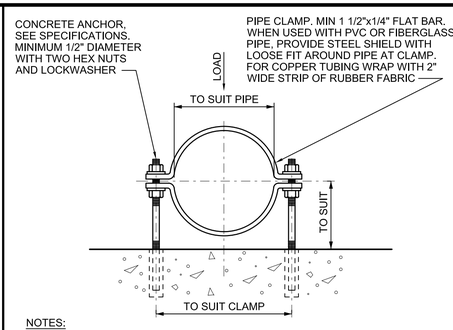

NOTES:

1. GALVANIZE ALL PARTS AFTER FABRICATION. WHERE SUBMERGED, PIPE CLAMP, NUTS, LOCKWASHERS, ANCHORS AND SHIELDS TO BE TYPE 316 STAINLESS STEEL
2. THIS PIPE CLAMP IS LIMITED TO PIPES UP TO 4" DIAMETER INCLUSIVE
3. FOR ADDITIONAL REQUIREMENTS SEE SPECIFICATIONS SECTION 'PIPE SUPPORTS'
4. PIPE SUPPORTS LOCATED IN CHEMICAL STORAGE OR CHEMICAL FEED AREAS, ALL MATERIALS SHALL BE TYPE 516 SS OR FIBERGLASS.

PIPE CLAMP

(FOR PIPE 4" DIAMETER AND SMALLER) REV 110112 M-101

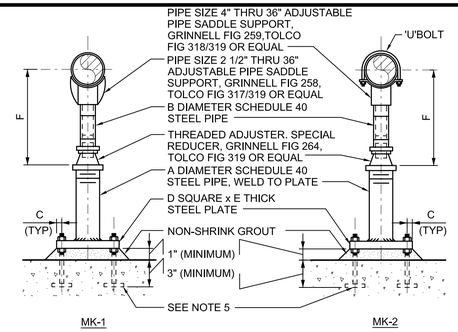

NOTES:

1. FOR ADDITIONAL REQUIREMENTS SEE SPEC SECTION 'PIPE SUPPORT'.
2. GALVANIZE ALL PARTS AFTER FABRICATION.
3. WHERE PIPE SUPPORT OCCURS ON GRADE REFER TO STRUCTURAL DRAWINGS FOR DETAILS.
4. THIS PIPE SUPPORT IS LIMITED TO PIPE FROM 2 1/2" DIAMETER TO 36" DIAMETER INCLUSIVE.
5. GALVANIZED ANCHOR BOLT OR CONCRETE ANCHOR WITH TWO NUTS AND ONE LOCKWASHER. PROVIDE BAR 4 x 1/2" x 4" WELDED TO BOLT (TYP OF 4) SEE SPECIFICATIONS.

DIMENSIONS IN INCHES

NOMINAL PIPE SIZE	A	B	C	D	E	F (APPROX) (MINIMUM)	F (APPROX) (MAXIMUM)
2 1/2	2	1 1/2	1	6	3/8	7	11 1/2
3	2	1 1/2	1	6	3/8	7 5/16	11 13/16
3 1/2	2	1 1/2	1	6	3/8	7 9/16	12 1/16
4	3	* 2 1/2 / 3	1 1/8	7 1/2	1/2	10 1/4	14 3/4
6	3	* 2 1/2 / 3	1 1/8	7 1/2	1/2	11 9/16	16 1/16
8	3	* 2 1/2 / 3	1 1/8	7 1/2	1/2	13 9/16	18 1/16
10	3	* 2 1/2 / 3	1 1/8	7 1/2	1/2	14 5/8	19 1/8
12	3	* 2 1/2 / 3	1 1/8	7 1/2	1/2	15 5/8	20 1/8
14	4	3	1 1/4	9	5/8	18 7/8	23 3/8
16	4	3	1 1/4	9	5/8	19 7/8	24 3/8
18	6	4	1 1/2	11	3/4	22 1/4	26 3/4
20	6	4	1 1/2	11	3/4	23 1/4	27 3/4
24	6	4	1 1/2	11	3/4	26 1/2	31
30	6	4	1 1/2	11	3/4	29 5/8	34 1/8
32	6	4	1 1/2	11	3/4	30 5/8	35 1/8
36	6	4	1 1/2	11	3/4	32 5/8	37 1/8

* SEE MANUFACTURER

ADJUSTABLE PIPE SUPPORT WITH OR WITHOUT 'U' BOLT

(FOR PIPE 36" DIAMETER AND SMALLER) REV 110112 M-108

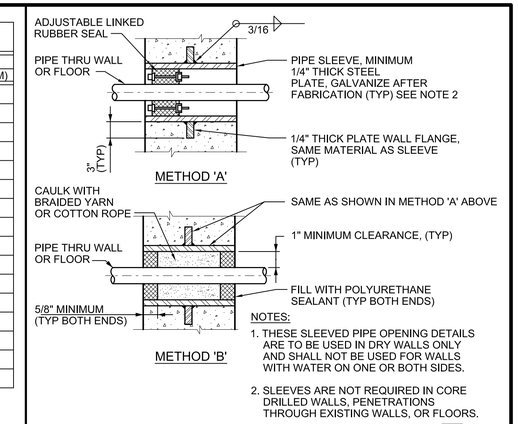

NOTES:

1. THESE SLEEVED PIPE OPENING DETAILS ARE TO BE USED IN DRY WALLS ONLY AND SHALL NOT BE USED FOR WALLS WITH WATER ON ONE OR BOTH SIDES.
2. SLEEVES ARE NOT REQUIRED IN CORE DRILLED WALLS, PENETRATIONS THROUGH EXISTING WALLS, OR FLOORS.

SLEEVED PIPE OPENING

REV 110112 M-111

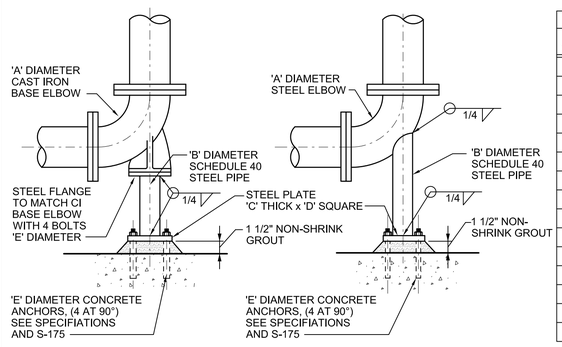

ELBOW 'A' DIAMETER	'B' DIAMETER	'C' THICK	'D' SQUARE	'E' DIAMETER
4	2	3/8	6	5/8
6	2 1/2	3/8	7	5/8
8	4	1/2	9	5/8
10	4	1/2	9	5/8
12	6	1/2	11	3/4
14	6	1/2	11	3/4
16	6	1/2	11	3/4
18	8	1/2	13 1/2	3/4
20	8	1/2	13 1/2	3/4
24	8	1/2	13 1/2	3/4
30	10	3/4	16	7/8
36	12	3/4	19	7/8
42	16	3/4	23 1/2	1
48	18	3/4	25	1 1/8

NOTE:

FOR ADDITONAL REQUIREMENTS SEE SPECIFICATION SECTION 'PIPE SUPPORTS'.

ELBOW SUPPORT

(FOR PIPE 48" DIAMETER AND SMALLER) REV 110112 M-140

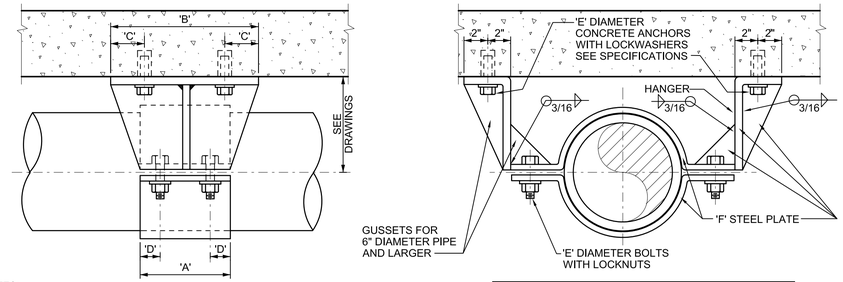

NOTES:

1. GALVANIZE ALL PARTS AFTER FABRICATION.
2. ALL BOLTS, ANCHORS, NUTS AND LOCKWASHERS EXPOSED TO WATER SHALL BE TYPE 316 STAINLESS STEEL.
3. FOR 16"-24" DIAMETER PIPES, PROVIDE THREE CONCRETE ANCHORS (SEE SPECS) AT 6" SPACING AND TWO GUSSETS AT 4" SPACING EACH SIDE OF HANGER.
4. FOR ADDITONAL REQUIREMENTS SEE SPECIFICATION SECTION 'PIPE SUPPORTS'.

DIMENSIONS IN INCHES

NOMINAL PIPE SIZE	'A'	'B'	'C'	'D'	'E'	'F'
3 TO 8	6	10	1 1/2	1	5/8	1/4
10 TO 14	8	12	2	1 1/2	3/4	3/8
16 TO 24	12	16	2	1 1/2	3/4	3/8

PIPE ANCHOR SUSPENDED FROM CONCRETE

(FOR PIPE 24" DIAMETER AND SMALLER) REV 110112 M-154

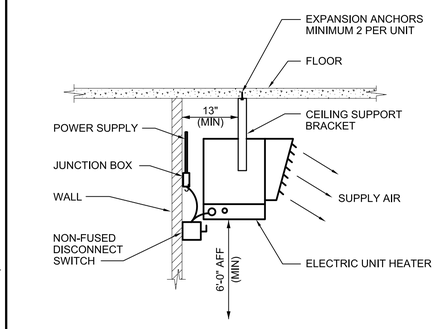

ELECTRIC UNIT HEATER

(CEILING MOUNTED) REV 110112 H-301

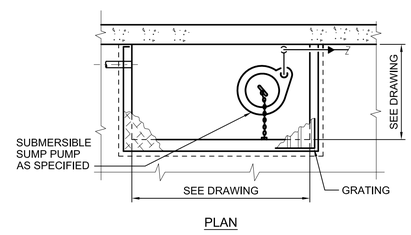

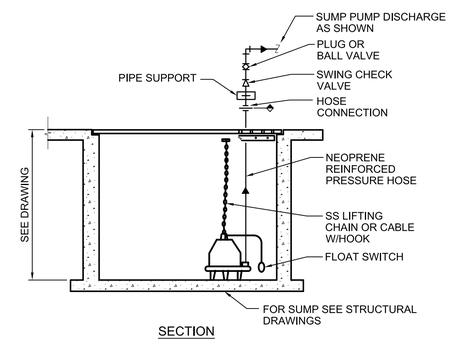

NOTES:

1. FOR ENTERING DRAINS, SEE DRAWINGS.
2. PIPE SIZES AS SHOWN.

DRAINAGE SUMP WITH PUMP

M-316

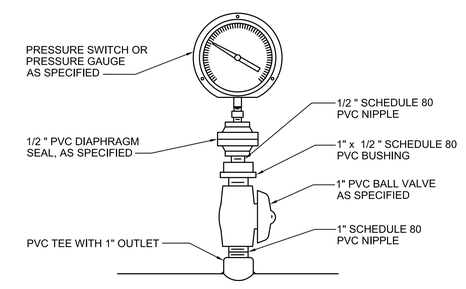

NOTE:

FOR CHEMICAL APPLICATIONS.

PRESSURE GAUGE OR SWITCH

WITH PVC DIAPHRAGM SEAL ON PVC PIPE REV 061108 I-322

REV	DATE	BY	DESCRIPTION

SCALE: NO SCALE

WARNING: 0 ½ 1 — IF THIS BAR DOES NOT MEASURE 1" THEN DRAWING IS NOT TO SCALE

DESIGNED J TORRE
DRAWN S SONAWANE
CHECKED -

CONSTRUCTION DOCUMENT PHASE - 90%

NOT FOR CONSTRUCTION
This document is an interim document and not suitable for construction. As an interim document, it may contain data that is potentially inaccurate or incomplete and is not to be relied upon without the express written consent of the preparer.

MWH®

CITY OF BELLEVUE UTILITIES
MIDLAKES PUMP STATION CAPACITY IMPROVEMENTS

MIDLAKES PUMP STATION CAPACITY IMPROVEMENTS
GENERAL MECHANICAL
GENERAL NOTES AND STANDARD DETAILS - I

SHEET M-2A
10505461

C:\pwworkdir\d0194383\MLPS_WWPS_M-2A.dwg | Layout: Layout1
PLOTTED: Apr 08, 2016-04:55:30pm By dyoconj
XREFS: MLPS_WWPS_Border.dwg; PipeSch-WasteWater REV 011309.dwg
IMAGES:

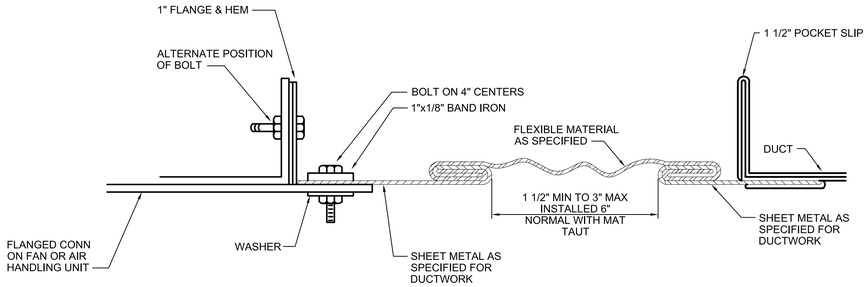

FLEXIBLE CONNECTION

H-401

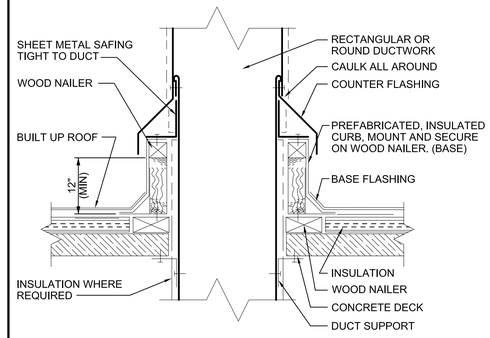

DUCT PENETRATION

(THROUGH ROOF)

REV 110112

H-409

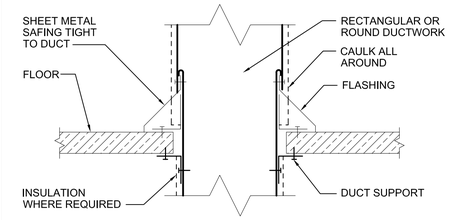

DUCT PENETRATION THRU FLOOR

(NON FIRE RATED)

REV 110112

H-421

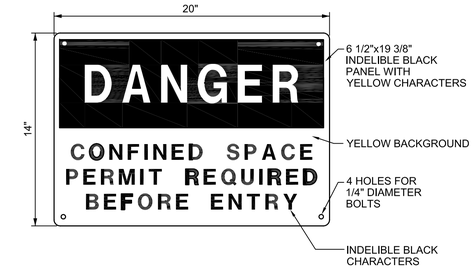

NOTE:

MATERIAL TO BE 0.040" ALUMINUM WITH BAKED ENAMEL FINISH OR EQUAL, STYLE AS SHOWN. SIGN TO BE ATTACHED IN CONSPICUOUS LOCATION AT ENTRY TO STRUCTURE.

WARNING SIGN

REV 110112

M-508

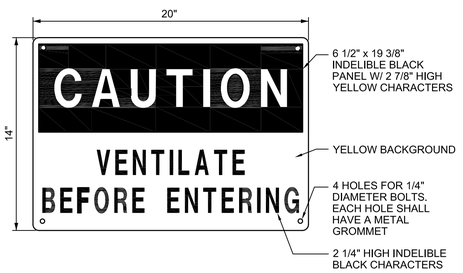

NOTES:

1. WARNING SIGN TO BE ABLE TO BEND TO A 9" RADIUS.
2. MATERIAL TO BE 0.060" THICK BUTYRATE OR EQUAL.
3. SIGN TO BE ATTACHED IN CONSPICUOUS LOCATION AT ENTRY OF STRUCTURE.

VENTILATION WARNING SIGN

REV 110112

M-509

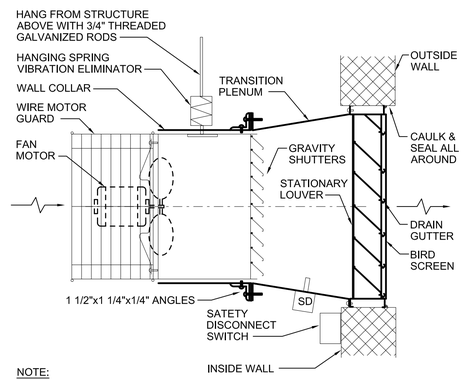

NOTE:

FOR LOUVER INSTALLATION DETAILS, SEE ARCHITECTURAL AND STRUCTURAL DRAWINGS.

SIDEWALL EXHAUST FAN

(WITH LOUVER)

REV 112414

H-511

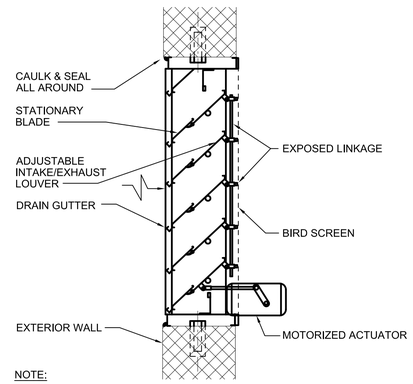

NOTE:

FOR LOUVER INSTALLATION DETAILS, SEE ARCHITECTURAL AND STRUCTURAL DRAWINGS.

MOTORIZED LOUVER

REV 112414

H-600

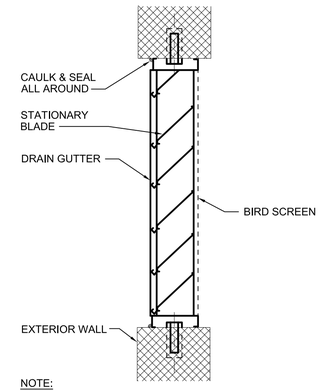

NOTE:

FOR LOUVER INSTALLATION DETAILS, SEE ARCHITECTURAL AND STRUCTURAL DRAWINGS.

STATIONARY LOUVER

REV 112414

H-602

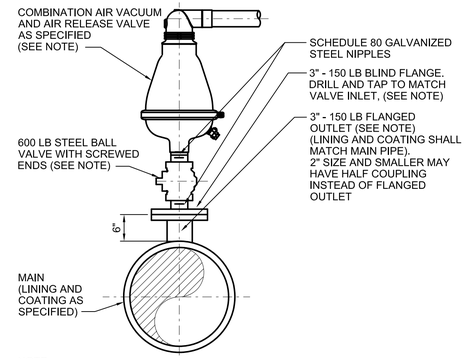

NOTE:

FOR PIPING SYSTEM WITH SERVICE PRESSURE CLASS GREATER THAN 150 PSI. ALL COMPONENTS FURNISHED SHALL BE SUITABLE FOR THE HIGHER PRESSURE

AIR-VACUUM AND AIR-RELEASE VALVE ASSEMBLY (3" AND SMALLER)

REV 110112

M-804

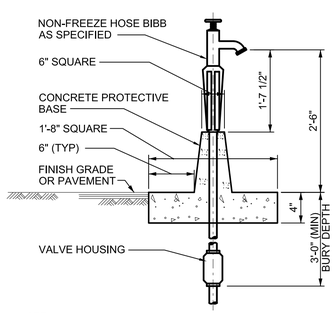

NOTE:

PROVIDE WARNING SIGN WHEN USED FOR NON-POTABLE WATER.

NON-FREEZE HOSE BIBB SURFACE MOUNTED

REV 110112

M-822

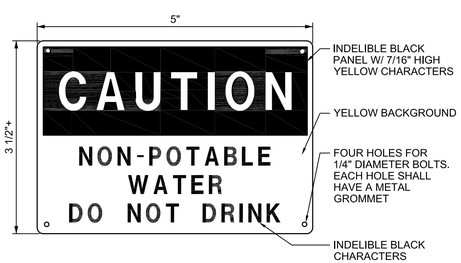

NOTES:

1. MATERIAL TO BE SEMI-RIGID BUTYRATE OR EQUAL.
2. COLORS AND LETTER SIZE TO BE PER OSHA STANDARDS FOR CAUTION SIGNS.
3. PROVIDE THIS SIGN AT ALL HOSE BIBB LOCATIONS WHERE WATER IS NON-POTABLE.

WARNING SIGN FOR NON-POTABLE WATER

REV 110112

M-832

REV	DATE	BY	DESCRIPTION

SCALE: NO SCALE

WARNING: 0 ½ 1 — IF THIS BAR DOES NOT MEASURE 1" THEN DRAWING IS NOT TO SCALE

DESIGNED J TORRE
DRAWN S SONAWANE
CHECKED -

CONSTRUCTION DOCUMENT PHASE - 90%

NOT FOR CONSTRUCTION

This document is an interim document and not suitable for construction. As an interim document, it may contain data that is potentially inaccurate or incomplete and is not to be relied upon without the express written consent of the preparer.

MWH®

CITY OF BELLEVUE UTILITIES
MIDLAKES PUMP STATION CAPACITY IMPROVEMENTS

MIDLAKES PUMP STATION CAPACITY IMPROVEMENTS
GENERAL MECHANICAL
STANDARD DETAILS - II

SHEET M-2B

10505461

C:\pwworkdir\d0194383\MLPS_WWPS_M-2B.dwg | Layout: Layout1
PLOTTED: Apr 08, 2016-11:15:39am By dyoconj
XREFS: MLPS_WWPS_Border.dwg; PipeSch-WasteWater REV 011309.dwg
IMAGES:

GENERAL SHEET NOTES

1. 12" DIA. DUCT SHALL BE LOCATED TO AVOID THE 4" WIDE TRUSS.
2. 12" DIA. VENT SHALL EXTEND AT LEAST 2 FT ABOVE THE HIGH POINT OF THE ROOF. PROVIDE VENT HEAD AND MESH PER DETAIL S-205 ON SHEET S-4B.

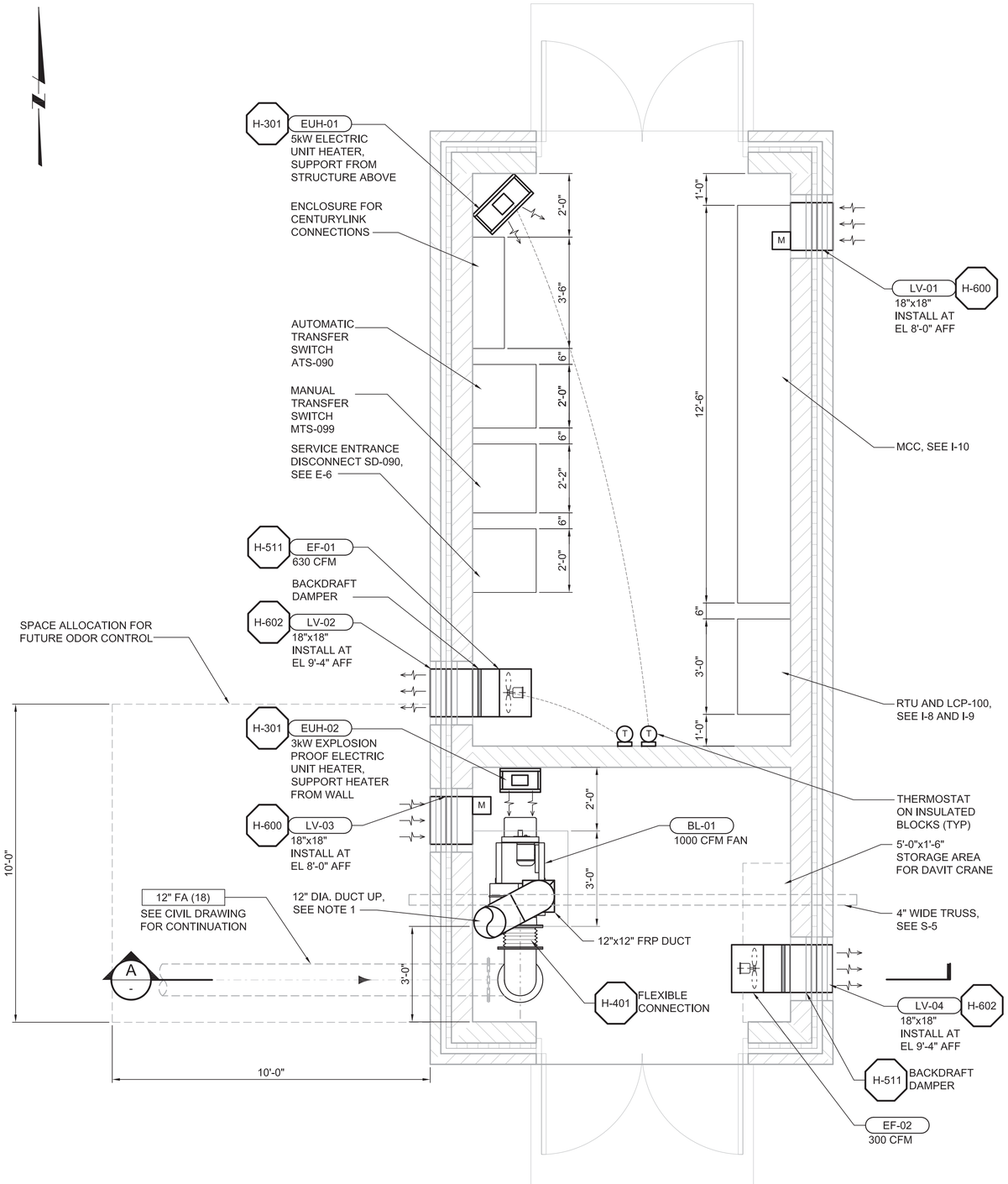

PLAN

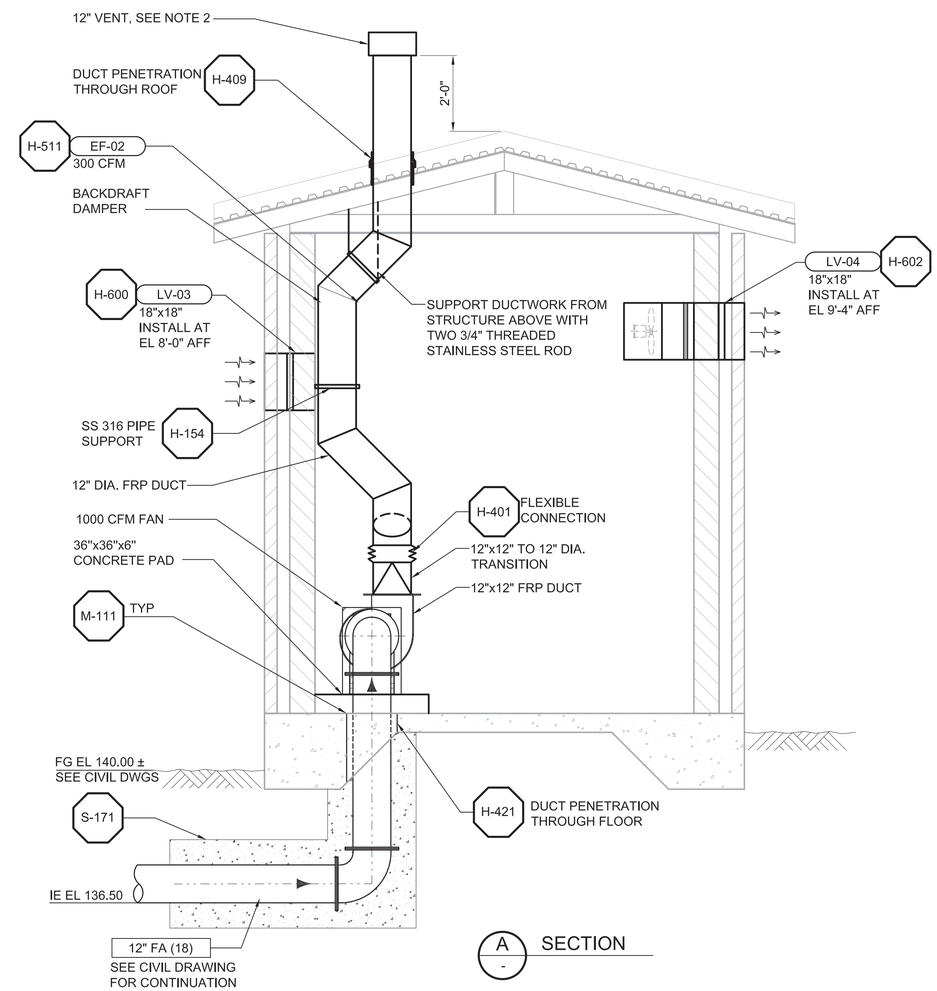

A - SECTION

REV	DATE	BY	DESCRIPTION

SCALE: 1/2" = 1'-0"

WARNING: 0 ½ 1 — IF THIS BAR DOES NOT MEASURE 1" THEN DRAWING IS NOT TO SCALE

DESIGNED Q DENG
DRAWN V NAIK
CHECKED -

CONSTRUCTION DOCUMENT PHASE - 90%

NOT FOR CONSTRUCTION
This document is an interim document and not suitable for construction. As an interim document, it may contain data that is potentially inaccurate or incomplete and is not to be relied upon without the express written consent of the preparer.

MWH®

CITY OF BELLEVUE UTILITIES
MIDLAKES PUMP STATION CAPACITY IMPROVEMENTS

MIDLAKES PUMP STATION CAPACITY IMPROVEMENTS
MECHANICAL
CONTROL BUILDING PLAN AND SECTION

SHEET M-5
10505461

C:\pwworkdir\d0194383\MLPS_WWPS_M-5.dwg | Layout: Layout1
PLOTTED: Apr 08, 2016-11:09:49am By dyoconj
XREFS: MLPS_WWPS_Border.dwg; MLPS_WWPS_HVAC.dwg; MLPS_WWPS_S_SEC1.dwg; MLPS_WWPS_S_PLAN1.dwg; MLPS_WWPS_S_PLAN0.dwg; MLPS_WWPS_A_PLAN0.dwg
IMAGES:

GENERAL LANDSCAPE NOTES

1. CONTRACTOR SHALL BE RESPONSIBLE FOR FAMILIARIZING WITH ALL OTHER SITE IMPROVEMENTS PRIOR TO STARTING LANDSCAPE WORK.
2. CONTRACTOR SHALL USE CAUTION WHILE EXCAVATING TO AVOID DISTURBING ANY UTILITIES ENCOUNTERED. CONTRACTOR IS TO PROMPTLY ADVISE GENERAL CONTRACTOR AND AGENCY OF ANY DISTURBED UTILITIES. (DIG ALERT 811)
3. CONTRACTOR SHALL MAINTAIN AND WATER ALL PLANT MATERIAL UNTIL FINAL INSPECTION AND ACCEPTANCE BY THE OWNER OR HIS AGENT IN WRITING.
4. CONTRACTOR SHALL BE RESPONSIBLE FOR COMPUTING SPECIFIC QUANTITIES OF GROUND COVERS AND PLANT MATERIALS UTILIZING ON-CENTER SPACING FOR PLANTS AS STATED IN THE PLANT SCHEDULE AND MINIMUM PLANTING DISTANCES AS SPECIFIED BELOW IN THESE NOTES.
5. GROUND COVERS SHALL BE PLANTED IN AN EQUILATERAL TRIANGULAR SPACING PATTERN AT THE ON CENTER DISTANCES SHOWN ON THE PLAN OR IN THE PLANT SCHEDULE. WHERE GROUND COVER ABUTS CURBING, WALKWAYS, SIGNS OR POLES, MINIMUM PLANTING DISTANCES SHALL BE 12" FROM CENTER OF PLANT TO CURB, WALKWAY, ETC., MINIMUM PLANTING DISTANCE SHALL BE 14" FROM CENTER OF TREES.
6. CONTRACTOR TO INSTALL EROSION CONTROL MATTING ON ALL SLOPES 4:1 OR GREATER.
7. CONTRACTOR SHALL BE RESPONSIBLE FOR PROVIDING THE QUANTITIES OF PLANTS THAT ARE REPRESENTED BY SYMBOLS ON THE DRAWINGS.
8. CONTRACTOR TO PROVIDE SOIL PREPARATION IN ALL NEW PLANTING AREAS AS SPECIFIED IN SECTION 329300.
9. SEE ADDITIONAL PLANTING NOTES ON PLANTING DETAILS.

PLANT SCHEDULE

TREES	BOTANICAL NAME / COMMON NAME	CONT	CAL	SIZE	QTY
	ACER CIRCINATUM / VINE MAPLE	15 GAL	1.5"CAL	7`-8`	4
	OEMLERIA CERASIFORMIS / INDIAN PLUM	15 GAL	1"CAL	7`-8`	2
	PICEA SITCHENSIS / SITKA SPRUCE	B & B		7`-8`	2

SHRUBS	BOTANICAL NAME / COMMON NAME	SIZE	QTY
	ARBUTUS UNEDO / STRAWBERRY TREE SHRUB	5 GAL	9
	CISTUS X HYBRIDUS / WHITE ROCKROSE	5 GAL	20
	MAHONIA AQUIFOLIUM / OREGON GRAPE	2 GAL	8
	POLYSTICHUM MUNITUM / WESTERN SWORD FERN	5 GAL	9
	ROSA NUTKANA / NOOTKA ROSE	5 GAL	9
	VACCINIUM OVATUM / EVERGREEN HUCKLEBERRY	2 GAL	6

GROUND COVERS	BOTANICAL NAME / COMMON NAME	CONT	SPACING	QTY
	FRAGARIA CHILOENSIS `LIPSTICK` / BEACH STRAWBERRY	4"POT	18" o.c.	87 SF
	GAULTHERIA SHALLON / SALAL	1 GAL	18" o.c.	479 SF
	TYPE I SEED MIX EROSION CONTROL SEED MIX	SEED		2,217 SF

ENHANCEMENT PLANTING AREA	1,470 SF	
CORNUS STOLONIFERA `KELSEY`S DWARF` / DOGWOOD	6	1 gal 64" oc
MAHONIA AQUIFOLIUM / OREGON GRAPE	6	1 gal 64" oc
PSEUDOTSUGA MENZIESII / DOUGLAS FIR	4	1 gal 120" oc
THUJA PLICATA `HOGAN` / HOGAN CEDAR	2	1 gal 120" oc
VACCINIUM OVATUM / EVERGREEN HUCKLEBERRY	11	1 gal 64" oc

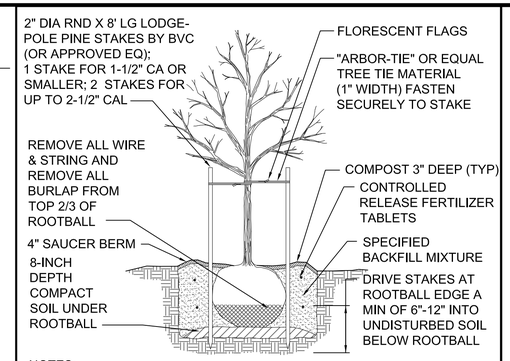

NOTES:
1. TREE SHALL BEAR SAME RELATION TO FINISHED GRADE AS IT BORE TO PREVIOUS PLANTING.
2. SEE GENERAL PLANTING NOTES FOR ADDITIONAL PLANTING AND PLANT INSTALLATION REQUIREMENTS.

DECIDUOUS TREE PLANTING DETAIL — L-107

SCALE: NOT TO SCALE

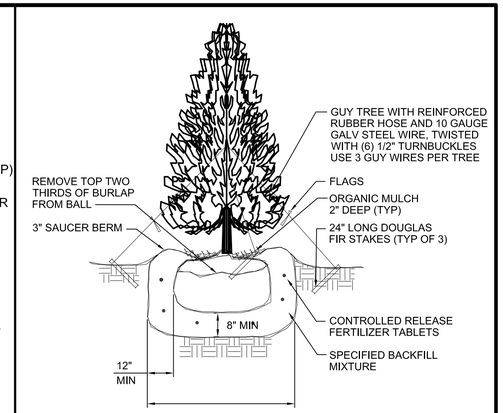

CONIFERS PLANTING — L-101

REV 112008

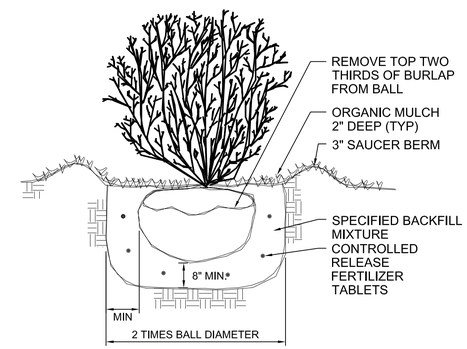

NOTE:
1. SHRUB SHALL BEAR SAME RELATION TO FINISHED GRADE AS IT BORE TO PREVIOUS PLANTING.

SHRUB PLANTING — L-110

REV 112008

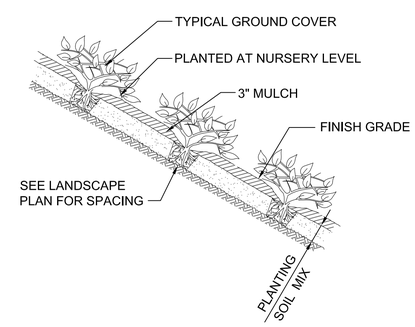

GROUND COVER PLANTING — L-137

REV	DATE	BY	DESCRIPTION

SCALE: 1" = 30'

WARNING: 0 ½ 1 — IF THIS BAR DOES NOT MEASURE 1" THEN DRAWING IS NOT TO SCALE

DESIGNED S. RADFORD
DRAWN P PAWAR
CHECKED S BEDROSS

FOR PERMIT REVIEW ONLY - APRIL 13, 2016

NOT FOR CONSTRUCTION
This document is an interim document and not suitable for construction. As an interim document, it may contain data that is potentially inaccurate or incomplete and is not to be relied upon without the express written consent of the preparer.

MWH®

CITY OF BELLEVUE UTILITIES
MIDLAKES PUMP STATION CAPACITY IMPROVEMENTS

MIDLAKES PUMP STATION CAPACITY IMPROVEMENTS
LANDSCAPE
NOTES AND LEGEND

SHEET L-1

10505461

C:\pwworkdir\d0282435\MLPS_WWPS_L-1.dwg | Layout: L-01
PLOTTED: Apr 13, 2016-09:38:52am By friskar
XREFS: MLPS_WWPS_Border.dwg; LandscapeModel.dwg
IMAGES:

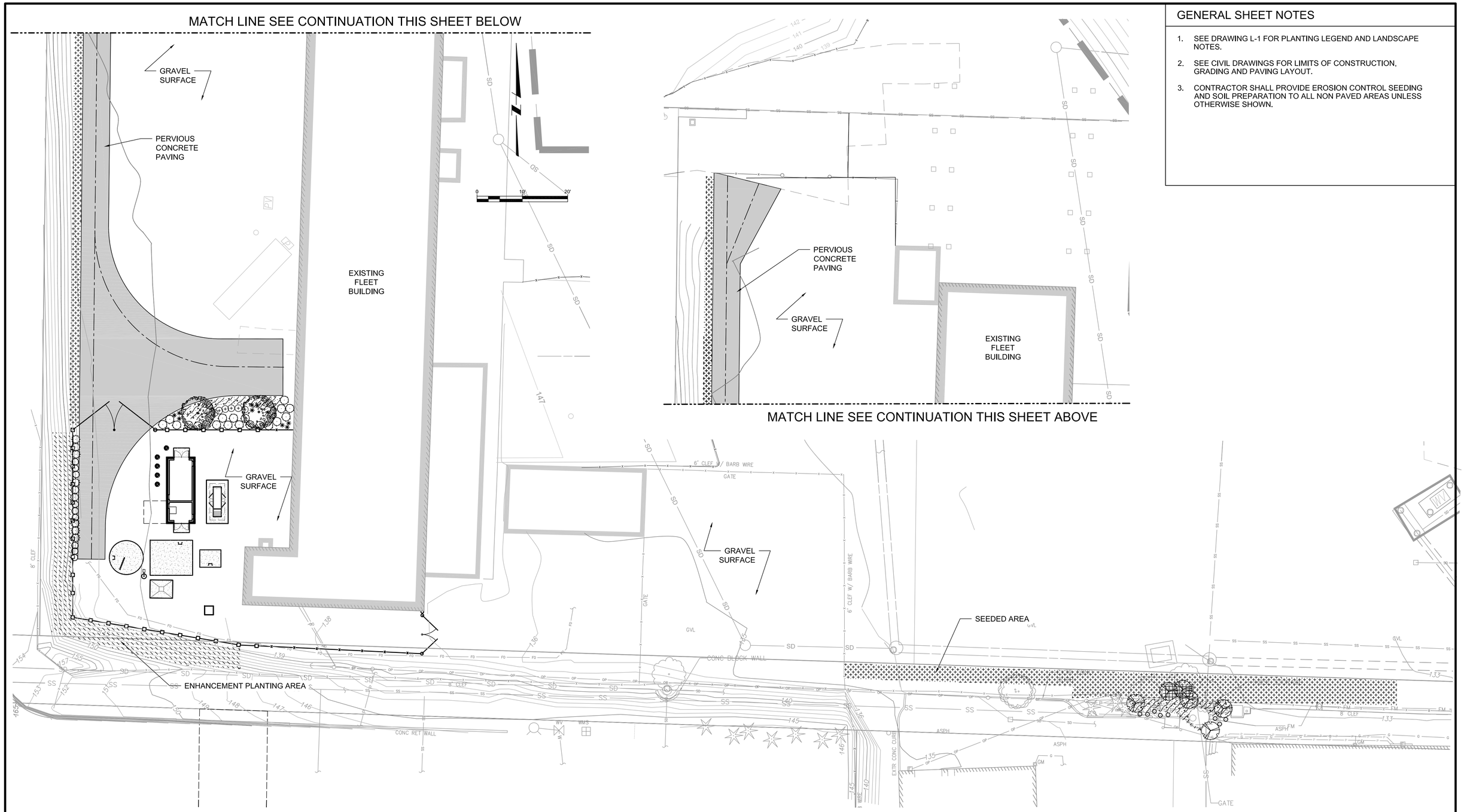

GENERAL SHEET NOTES

1. SEE DRAWING L-1 FOR PLANTING LEGEND AND LANDSCAPE NOTES.
2. SEE CIVIL DRAWINGS FOR LIMITS OF CONSTRUCTION, GRADING AND PAVING LAYOUT.
3. CONTRACTOR SHALL PROVIDE EROSION CONTROL SEEDING AND SOIL PREPARATION TO ALL NON PAVED AREAS UNLESS OTHERWISE SHOWN.

REV	DATE	BY	DESCRIPTION

SCALE: 1" = 20'

WARNING: 0 ½ 1 — IF THIS BAR DOES NOT MEASURE 1" THEN DRAWING IS NOT TO SCALE

DESIGNED S. RADFORD
DRAWN P PAWAR
CHECKED S BEDROSS

FOR PERMIT REVIEW ONLY - APRIL 13, 2016

NOT FOR CONSTRUCTION

This document is an interim document and not suitable for construction. As an interim document, it may contain data that is potentially inaccurate or incomplete and is not to be relied upon without the express written consent of the preparer.

MWH®

CITY OF BELLEVUE UTILITIES
MIDLAKES PUMP STATION CAPACITY IMPROVEMENTS

MIDLAKES PUMP STATION CAPACITY IMPROVEMENTS
LANDSCAPE
LANDSCAPE PLAN

SHEET L-3

10505461

C:\pwworkdir\0282435\MLPS_WWPS_L-3_.dwg | Layout: L-3
PLOTTED: Apr 13, 2016-09:43:49am By frisk ar
XREFS: MLPS_WWPS_Border.dwg; LandscapeModel.dwg; MWH_Civil_Site.dwg; MLPS01M_Plan00.dwg; MLPS_WWPS_A_PLAN0.dwg; MLPS01M_Generator.dwg; MLPS_WWPS_GradingMDL.dwg
IMAGES:

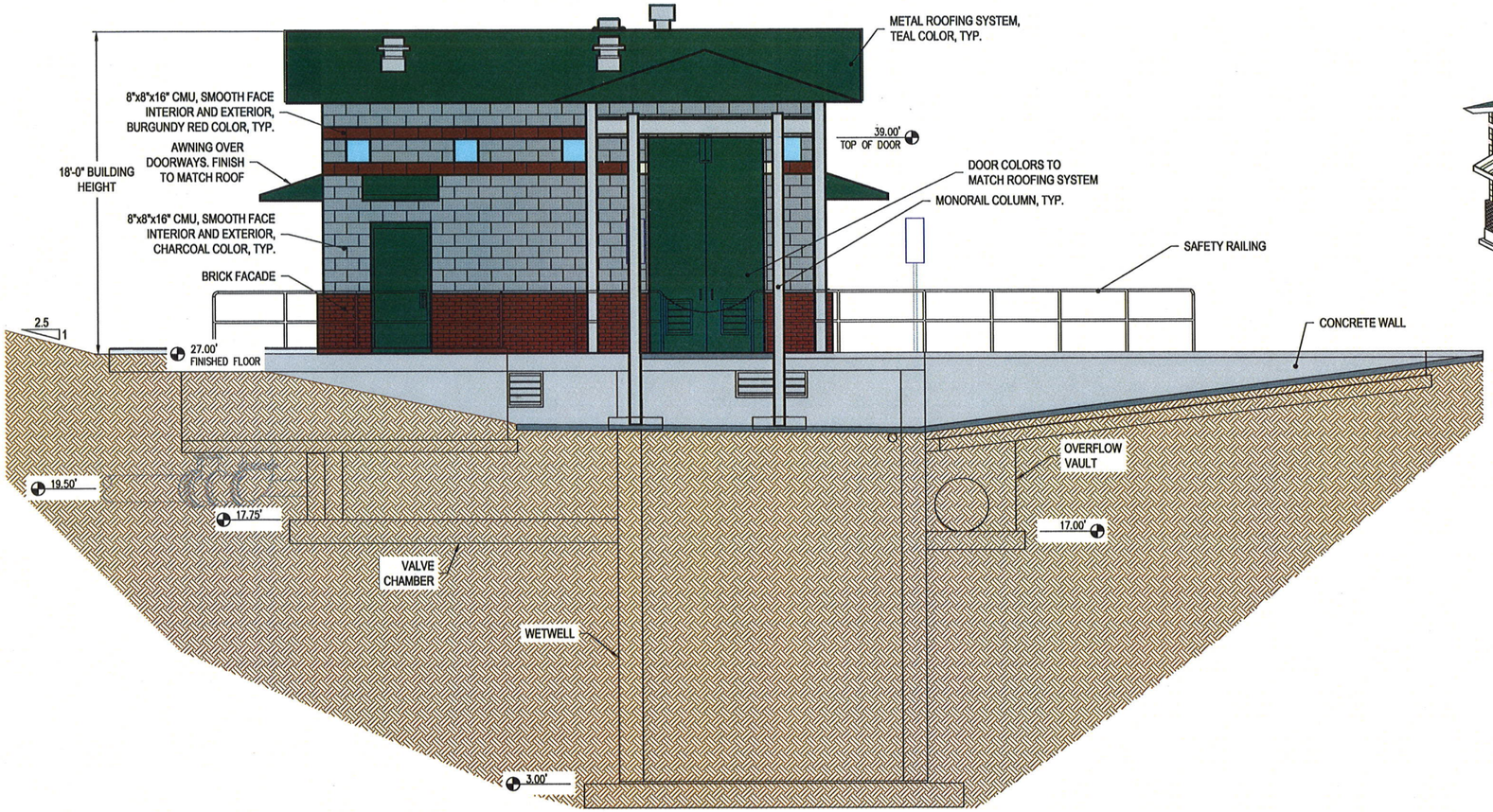

SOUTH ELEVATION

¼" = 1'-0"

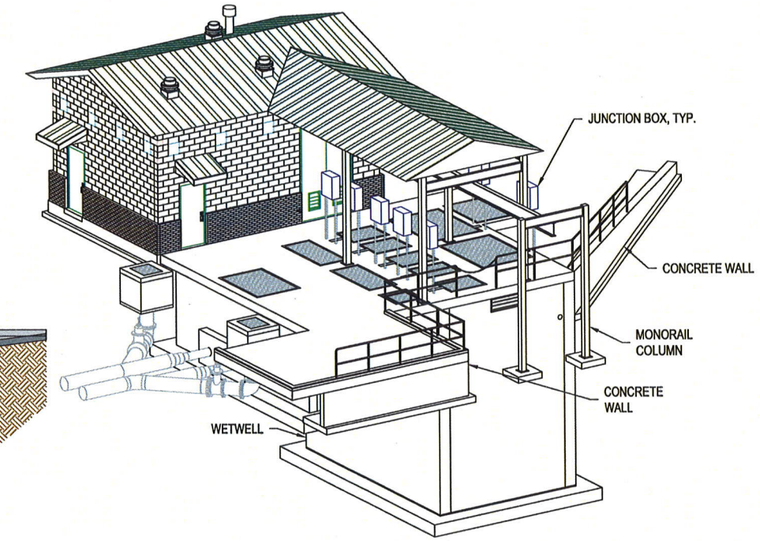

EXTERIOR VIEW OBLIQUE

NOT TO SCALE

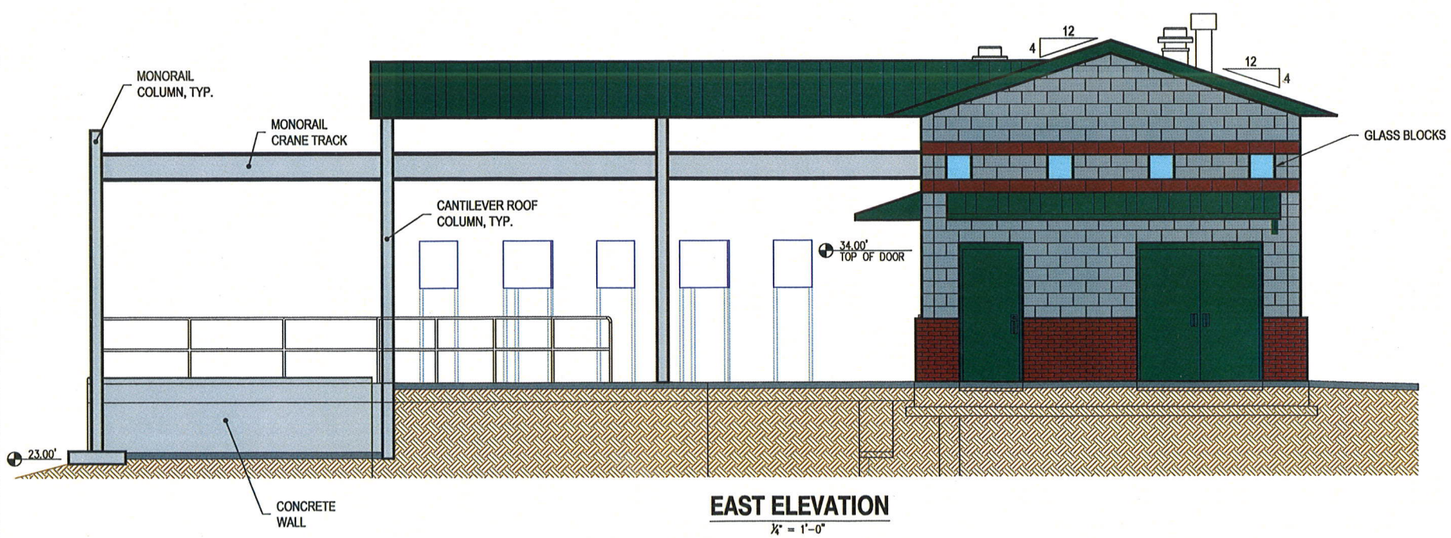

EAST ELEVATION

¼" = 1'-0"

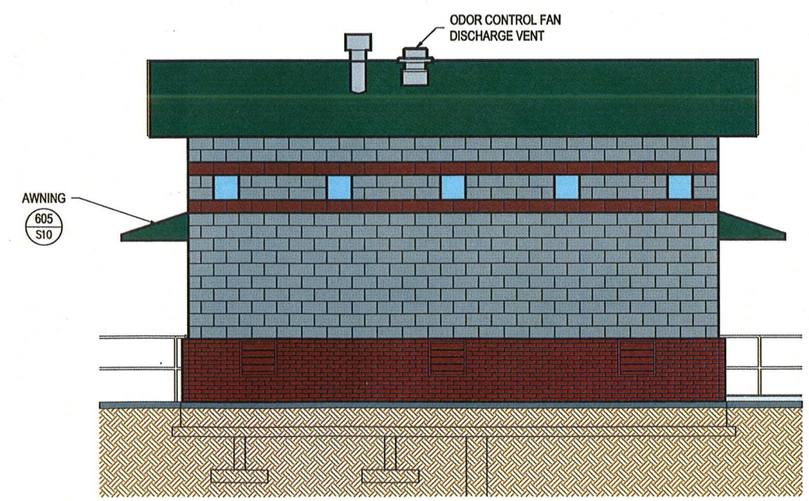

NORTH ELEVATION

¼" = 1'-0"

CITY OF BELLEVUE
BELLEFIELD PUMP STATION
CAPACITY IMPROVEMENTS

ARCHITECTURAL ELEVATIONS

RH2 ENGINEERS PLANNERS SCIENTISTS
RH2 ENGINEERING, INC.
www.rh2.com
Bellevue, WA 98005
1.800.720.8052
22722 29th Drive SE, Suite 210

SIGNED: 11/12/14
SIGNED: 11/12/14

ENGINEER: AHF
REVIEWED: JMC
SAVE DATE: Nov 6, 2014
PLOT DATE: Nov 6, 2014
CLIENT: BEL
FILENAME: BFLS-D-ARCH01.DWG
JOB NO.: 113-024

REVISIONS

NO.	DATE	DESCRIPTION	BY	REVIEW
1	11/12/14	ISSUED FOR BIDDING	AHF	RJF

SCALE: SHOWN

0" 1" 2"

DRAWING IS FULL SCALE WHEN BAR MEASURES 2"

DWG NO.: A01
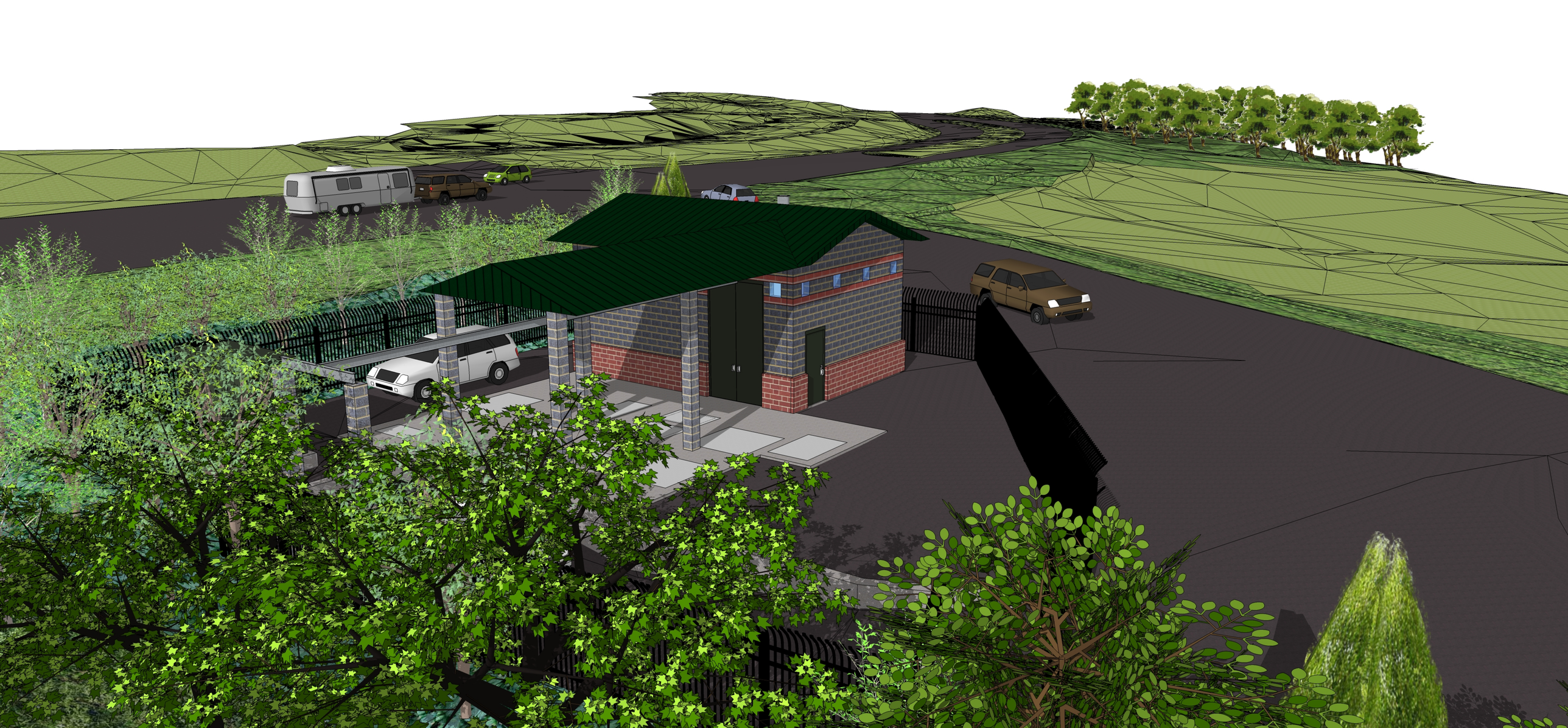
SHEET NO.: 26 / 63