DEVELOPMENT SERVICES DEPARTMENT
ENVIRONMENTAL COORDINATOR
450 110th Ave NE., P.O. BOX 90012
BELLEVUE, WA 98009-9012

OPTIONAL DETERMINATION OF NON-SIGNIFICANCE (DNS) NOTICE MATERIALS

The attached materials are being sent to you pursuant to the requirements for the Optional DNS Process (WAC 197-11-355). A DNS on the attached proposal is likely. This may be the only opportunity to comment on environmental impacts of the proposal. Mitigation measures from standard codes will apply. Project review may require mitigation regardless of whether an EIS is prepared. A copy of the subsequent threshold determination for this proposal may be obtained upon request.

File No. 16-126313-WE

Project Name/Address: COB Parks Chesterfield Beach Park Dock Repair at 2501 100th Avenue SE

Planner: Reilly Pittman

Phone Number: 425-452-4350

Minimum Comment Period: August 18, 2016

Materials included in this Notice:

- ☒ Blue Bulletin
- ☒ Checklist
- ☒ Vicinity Map
- ☒ Plans
- ☐ Other:

OTHERS TO RECEIVE THIS DOCUMENT:

☒ State Department of Fish and Wildlife / Sterwart.Reinbold@dfw.gov; Christa.Heller@dfw.wa.gov;
☒ State Department of Ecology, Shoreline Planner N.W. Region / Jobu461@ecy.wa.gov; sepaunit@ecy.wa.gov
☒ Army Corps of Engineers Susan.M.Powell@nws02.usace.army.mil
☒ Attorney General ecyolyef@atg.wa.gov
☒ Muckleshoot Indian Tribe Karen.Walter@muckleshoot.nsn.us; Fisheries.fileroom@muckleshoot.nsn.us

SEPA Checklist reviewed by Reilly Pittman on 8/2/16

SEPA Environmental Checklist

Purpose of checklist:

Governmental agencies use this checklist to help determine whether the environmental impacts of your proposal are significant. This information is also helpful to determine if available avoidance, minimization or compensatory mitigation measures will address the probable significant impacts or if an environmental impact statement will be prepared to further analyze the proposal.

Instructions for applicants:

This environmental checklist asks you to describe some basic information about your proposal. Please answer each question accurately and carefully, to the best of your knowledge. You may need to consult with an agency specialist or private consultant for some questions. You may use "not applicable" or "does not apply" only when you can explain why it does not apply and not when the answer is unknown. You may also attach or incorporate by reference additional studies reports. Complete and accurate answers to these questions often avoid delays with the SEPA process as well as later in the decision-making process.

The checklist questions apply to all parts of your proposal, even if you plan to do them over a period of time or on different parcels of land. Attach any additional information that will help describe your proposal or its environmental effects. The agency to which you submit this checklist may ask you to explain your answers or provide additional information reasonably related to determining if there may be significant adverse impact.

Instructions for Lead Agencies:
Please adjust the format of this template as needed. Additional information may be necessary to evaluate the existing environment, all interrelated aspects of the proposal and an analysis of adverse impacts. The checklist is considered the first but not necessarily the only source of information needed to make an adequate threshold determination. Once a threshold determination is made, the lead agency is responsible for the completeness and accuracy of the checklist and other supporting documents.

Use of checklist for nonproject proposals: [help]

For nonproject proposals (such as ordinances, regulations, plans and programs), complete the applicable parts of sections A and B plus the SUPPLEMENTAL SHEET FOR NONPROJECT ACTIONS (part D). Please completely answer all questions that apply and note that the words "project," "applicant," and "property or site" should be read as "proposal," "proponent," and "affected geographic area," respectively. The lead agency may exclude (for non-projects) questions in Part B - Environmental Elements –that do not contribute meaningfully to the analysis of the proposal.

Received
MAR - 7 2015
Permit Processing

A. Background [help]

1. Name of proposed project, if applicable: [help]

   City of Bellevue: Maintenance and Repairs for Dock Structures: Chesterfield Beach Park

2. Name of applicant: [help]

   City of Bellevue Parks and Community Services Department
   Bret Wilson, Capital Project Coordinator

RP

3. Address and phone number of applicant and contact person: [help]

450 110th Avenue NE, PO Box 90012, Bellevue, WA 98009
Applicant: Bret Wilson (Capital Project Coordinator); 425-452-2932
Authorized Agent: Victoria R. England, BergerABAM, 206-357-5621

4. Date checklist prepared: [help]

17 February 2016

5. Agency requesting checklist: [help]

City of Bellevue Land Use Division

6. Proposed timing or schedule (including phasing, if applicable): [help]

July 2016 through December 2017

7. Do you have any plans for future additions, expansion, or further activity related to or connected with this proposal? If yes, explain. [help]

No

8. List any environmental information you know about that has been prepared, or will be prepared, directly related to this proposal. [help]

Joint Aquatic Reqources Permit Application (JARPA), U.S. Army Corps of Engineers (USACE) Special Project Information Form programmatic biological evaluations, City of Bellevue Shoreline Development Exemption request

9. Do you know whether applications are pending for governmental approvals of other proposals directly affecting the property covered by your proposal? If yes, explain. [help]

No

10. List any government approvals or permits that will be needed for your proposal, if known. [help]

USACE Nationwide Permit #3 for Maintenance, 401 Water Quality Certification, City of Bellevue Shorelines Exemption, Endangered Species Act consultation, Washington Department of Fish & Wildlife (WDFW) Hydraulic Project Approval

11. Give brief, complete description of your proposal, including the proposed uses and the size of the project and site. There are several questions later in this checklist that ask you to describe certain aspects of your proposal. You do not need to repeat those answers on this page. (Lead agencies may modify this form to include additional specific information on project description.) [help]

The project includes repair and maintenance of swimming dock/pier facilities at Chesterfield Beach Park. The repairs are summarized below and in the attached Sheets 1 through 4. The dock facilities at Chesterfield Park require regular maintenance and repairs. The observations recorded during condition surveys completed by BergerABAM in 2014 indicate that a variety of repairs should be completed at the site to keep it in good working condition for public use.

The following summarizes the existing conditions and proposed maintenance and repairs at the site.

Chesterfield Beach Park (Sheets 1 through 4)
The conditions of the features at Chesterfield Beach Park vary as summarized below.

- The pier, bulkhead, and concrete stairs are in generally good condition.
- Major damage from a fungal cavity was observed on one pier pile at Pile 2 as shown on Sheets 3 and 4. The damaged pile has very little bearing on the pile cap and only partial bearing on the concrete footing at Pile 2.
- Moderate undermining of the bulkhead was observed at the back of the pier. The area of undermining was 2 feet 6 inches deep by 6 inches high for a 5-foot length under the concrete deck.
- The south two swim area line piles have minor mechanical damage.

The proposed actions to maintain this facility in good condition are as follows.

- Straps will be added from the pile cap to the concrete footing at Pile 2.
- Repair the pile at Pile 2.
- The beach in front of the bulkhead under the pier will be repaired by placing less than 1 cubic yard of riprap to prevent further loss of material from behind the bulkhead.
- ~~Installation of two steel pin piles (each 4.5 inches in diameter) to anchor the seasonally placed rope that demarcates the swimming area.~~ **Installation of new piles is no longer proposed**
- Removal of debris (e.g., pieces of concrete, garbage, etc.) greater than 6 inches in diameter from the mudline in the work area, as feasible.
- Removal of the approximately 24-inch tall, 18x18 concrete footing remnant located approximately 5 feet west of the face of the concrete platform.

12. Location of the proposal. Give sufficient information for a person to understand the precise location of your proposed project, including a street address, if any, and section, township, and range, if known. If a proposal would occur over a range of area, provide the range or boundaries of the site(s). Provide a legal description, site plan, vicinity map, and topographic map, if reasonably available. While you should submit any plans required by the agency, you are not required to duplicate maps or detailed plans submitted with any permit applications related to this checklist. [help]

2501 - 100th Avenue SE, Bellevue, WA 98004
Township 24 North, Range 5 East, NE 1/4 of Section 8
47.588114 N lat/ -122.206403 W long

RP

B. Environmental Elements [help]

1. Earth [help]

a. General description of the site: [help]

The site is a public park with swimming facilities located at the shoreline (see Sheets 1 and 2). Chesterfield Beach Park lies on the east shore of Lake Washington, directly east of the northern tip of Mercer Island. The in-water and waterfront structures at the swim park consist of a 57-foot-long by 6-foot 3-inch-wide pier with a 17-foot by 18-foot 3-inch platform, concrete bulkhead, stairs to the water at the shore end, and four 12-inch-diameter ACZA-treated timber piles that hold the swimming boundary lines in place. See Sheets 1 through 4.

The pier is supported by fourteen 12-inch-diameter ACZA-treated timber plumb piles and three 18x18 concrete footings (Bents 1 through 8). The pier deck consists of a grated surface supported by a 12x12 sub cap, longitudinal 12x12 timber pile cap, and 4x12 timber stringers. A 30-foot timber hand railing is located on the north side of the pier. A concrete bulkhead and stairs to the water are located at the shore end of the pier. Four 12-inch-diameter ACZA-treated timber piles coated with composite sleeves anchor the lines for the swim area.

(circle one): Flat, rolling, hilly, steep slopes, mountainous, (other) shoreline

b. What is the steepest slope on the site (approximate percent slope)? [help]

The concrete steps along the shoreline have a vertical face.

c. What general types of soils are found on the site (for example, clay, sand, gravel, peat, muck)? If you know the classification of agricultural soils, specify them and note any agricultural land of long-term commercial significance and whether the proposal results in removing any of these soils. [help]

The mudline is sand and gravel with some aquatic grasses observed during the 2014 survey completed by BergerABAM.

d. Are there surface indications or history of unstable soils in the immediate vicinity? If so, describe. [help]

No.

e. Describe the purpose, type, total area, and approximate quantities and total affected area of any filling, excavation, and grading proposed. Indicate source of fill. [help]

Not applicable.

f. Could erosion occur as a result of clearing, construction, or use? If so, generally describe. [help]

No.

g. About what percent of the site will be covered with impervious surfaces after project construction (for example, asphalt or buildings)? [help]

Not applicable.

RP

h. Proposed measures to reduce or control erosion, or other impacts to the earth, if any: [help]

Not applicable.

Earth work regulated by BCC 23.76, construction BMPs and C&G standards

2. Air [help]

a. What types of emissions to the air would result from the proposal during construction, operation, and maintenance when the project is completed? If any, generally describe and give approximate quantities if known. [help]

Emissions associated with project will consist of automobile emissions of the workers arriving to and from work and the short-term emissions from operation of a equipment, including a small excavator used during riprap placement and a small impact hammer (100 to 300 lb) during pile installation. These emissions will be relatively minor and short in duration and are commensurate to the emissions from traffic currently around the site.

b. Are there any off-site sources of emissions or odor that may affect your proposal? If so, generally describe. [help]

No.

c. Proposed measures to reduce or control emissions or other impacts to air, if any: [help]

Not applicable.

3. Water [help]

a. Surface Water:

1) Is there any surface water body on or in the immediate vicinity of the site (including year-round and seasonal streams, saltwater, lakes, ponds, wetlands)? If yes, describe type and provide names. If appropriate, state what stream or river it flows into. [help]

Yes. The work will occur in and at the shoreline of Lake Washington.

2) Will the project require any work over, in, or adjacent to (within 200 feet) the described waters? If yes, please describe and attach available plans. [help]

Yes. The proposed project maintenance and repair activities will be completed as described below and shown in Sheets 1 through 4.

The proposed actions to maintain this facility in good condition are as follows.

- Add galvanized steel straps connecting the pile cap to the concrete footing at Pile 2C.
- Repair the timber pile at Pile 2C.
- Place 6-inch quarry spall riprap in front of the bulkhead to prevent further loss of material from behind the bulkhead.
- ~~Install two 4.5-inch outer diameter (OD) steel pin piles using a small impact hammer. One pile will be located nearshore and the second pile will be~~

RP

~~located near the waterward end of the fence on the neighboring property to the south as shown on Sheet 3.~~ **No new piles are proposed to be installed.**

- Removal of debris (e.g., concrete pieces, garbage, etc.) measuring 6 inches in diameter or greater. The debris will be removed by hand where feasible and/or using a small excavator with a clamshell operated from a small work float or barge.

- Removal of the remnant concrete footing post. The post will be removed using the excavator clamshell operated from a small work float or barge.

Proposed work subject to LUC 20.25E.080.N.4

The work will be completed at Chesterfield Beach Park using divers and an excavator operated from a work float or small barge.

The repair at Pile 2C (as shown on Sheet 4) will require removal of the dock deck and the existing (decaying) timber pile post using a saw and the excavator clamshell bucket. The damaged pile will be replaced by using a hydraulic drill to drill a hole in remaining good pile for a galvanized steel drift pin and setting the new 12- to 14-inch-diameter ACZA-treated timber post with excavator. Holes will be drilled into the new post section for installation of strap bolts. The strap bolts will be installed using hand tools.

Less than 1 cubic yard of 6-inch quarry spall riprap will be placed at the location of the material loss (shown on Sheets 3 and 4) both with the excavator and by hand.

~~The pile installation will be completed using a small (100 to 300 lb.) impact hammer operated from a work float or barge. We assume installation will require a maximum of 300 hammer blows per pile.~~ **No pile installation is proposed.**

3) Estimate the amount of fill and dredge material that would be placed in or removed from surface water or wetlands and indicate the area of the site that would be affected. Indicate the source of fill material. [help]

Less than 1 cubic yard of clean, washed 6-inch quarry spall riprap will be placed near the northeast corner of the existing concrete pad. The riprap will be obtained from an approved commercial source.

4) Will the proposal require surface water withdrawals or diversions? Give general description, purpose, and approximate quantities if known. [help]

No.

5) Does the proposal lie within a 100-year floodplain? If so, note location on the site plan. [help]

Yes. The work will occur in and adjacent to the water of Lake Washington.

6) Does the proposal involve any discharges of waste materials to surface waters? If so, describe the type of waste and anticipated volume of discharge. [help]

No.

RP

b. Ground Water:

1) Will groundwater be withdrawn from a well for drinking water or other purposes? If so, give a general description of the well, proposed uses and approximate quantities withdrawn from the well. Will water be discharged to groundwater? Give general description, purpose, and approximate quantities if known. [help]

No.

2) Describe waste material that will be discharged into the ground from septic tanks or other sources, if any (for example: Domestic sewage; industrial, containing the following chemicals. . . ; agricultural; etc.). Describe the general size of the system, the number of such systems, the number of houses to be served (if applicable), or the number of animals or humans the system(s) are expected to serve. [help]

Not applicable.

c. Water Runoff (including stormwater):

1) Describe the source of runoff (including storm water) and method of collection and disposal, if any (include quantities, if known). Where will this water flow? Will this water flow into other waters? If so, describe. [help]

Not applicable.

2) Could waste materials enter ground or surface waters? If so, generally describe. [help]

No.

3) Does the proposal alter or otherwise affect drainage patterns in the vicinity of the site? If so, describe. [help]

No.

d. Proposed measures to reduce or control surface, ground, and runoff water, and drainage pattern impacts, if any: [help]

Not applicable.

4. Plants [help]

a. Check the types of vegetation found on the site: [help]

The shoreline is paved with concrete steps. The upland portion of the site has grass and low park vegetation. The in-water portion of the site is sand and gravel with some aquatic grasses observed during the 2014 inspection (BergerABAM, 2014). See Sheets 1 through 5.

____deciduous tree: alder, maple, aspen, other
____evergreen tree: fir, cedar, pine, other
__X_shrubs
__X_grass
____pasture
____crop or grain
____Orchards, vineyards or other permanent crops.

RP

____ wet soil plants: cattail, buttercup, bullrush, skunk cabbage, other
____water plants: water lily, eelgrass, milfoil, other
____other types of vegetation

b. What kind and amount of vegetation will be removed or altered? [help]

None.

c. List threatened and endangered species known to be on or near the site. [help]

Not applicable.

d. Proposed landscaping, use of native plants, or other measures to preserve or enhance vegetation on the site, if any: [help]

Not applicable.

e. List all noxious weeds and invasive species known to be on or near the site. [help]

No noxious weeds or invasive plant species are known to be on or near the site.

5. Animals [help]

a. List any birds and other animals which have been observed on or near the site or are known to be on or near the site. [help]

Examples include:

birds: hawk, heron, eagle, songbirds, other:
mammals: deer, bear, elk, beaver, other:
fish: bass, salmon, trout, herring, shellfish, other _____

b. List any threatened and endangered species known to be on or near the site. [help]

Species Listed or Proposed for Listing under the ESA Occurring in Project Area

Species Name			ESA Listing Status	Critical Habitat
Common Name	Scientific Name	ESU or DPS*		
Chinook Salmon	*Oncorhynchus tshawytscha*	Puget Sound	Threatened (NMFS)	Designated
Coho salmon	*Oncorhynchus kisutch*	Puget Sound/Strait of Georgia	Species of Concern (NMFS)	-NA-
Steelhead	*Oncorhynchus mykiss*	Puget Sound	Threatened (NMFS)	Proposed, but not in action area
Bull Trout	*Salvelinus Confluentus*	Columbia River	Threatened (USFWS)	Designated

*ESU=Evolutionarily Significant Unit; DPS=Distinct Population Segment

The following table summarizes ESA-listed species that are unlikely to be present in the project area.

RP

Species Listed but Not Likely to be in the Project Area

Species Name		ESA Listing Status
Common Name	**Scientific Name**	
Marbled murrelet	*Brachyramphus marmoratus*	Threatened (USFWS)
Streaked horned lark	*Eremophila alpestris strigata*	Threatened (USFWS)
Yellow-billed Cuckoo (Western DPS)	*Coccyzus americanus*	Threatened (USFWS)
Canada lynx	*Lynx Canadensis*	Threatened (USFWS)
Gray wolf	*Canis lupus*	Proposed (USFWS)
Golden paintbrush	*Castilleja levisecta*	Threatened (USFWS)

The following species and/or habitat is listed by WDFW as Priority Habitats and Species in the project area.

Priority Species Name		Priority Habitat Listing
Common Name	Scientific Name	**Chesterfield**
Chinook Salmon	*Oncorhynchus tshawytscha*	Migration (Fall, mapped as central channel between Mercer Island and Bellevue)
Coho salmon	*Oncorhynchus kisutch*	Migration (mapped as central channel between Mercer Island and Bellevue)
Steelhead	*Oncorhynchus mykiss*	Migration (Winter, mapped as central channel between Mercer Island and Bellevue)
Dolly Varden/ Bull Trout	*Salvelinus malma*	Breeding (mapped as central channel between Mercer Island and Bellevue)
Sockeye	*Oncorhynchus nerka*	Migration (mapped as central channel between Mercer Island and Bellevue)
Kokanee	*Oncorhynchus nerka*	Migration (mapped as central channel between Mercer Island and Bellevue)
Cutthroat	*Oncorhynchus clarki*	Migration (mapped as central channel between Mercer Island and Bellevue)
Bald Eagle	*Haliaeetus leucocephalus*	Breeding, buffer is approximately 260 feet south of the park.

c. Is the site part of a migration route? If so, explain. [help]

The central channel of Lake Washington between Mercer Island and Bellevue is listed as a migration route for Chinook and Coho salmon, steelhead, Sockeye, Kokanee, and Cutthroat.

d. Proposed measures to preserve or enhance wildlife, if any: [help]

Not applicable.

e. List any invasive animal species known to be on or near the site. [help]

There are no known invasive animal species present at or near the site.

6. Energy and Natural Resources [help]

a. What kinds of energy (electric, natural gas, oil, wood stove, solar) will be used to meet the completed project's energy needs? Describe whether it will be used for heating, manufacturing, etc. [help]

Fuel to operate equipment and vehicles will be used.

b. Would your project affect the potential use of solar energy by adjacent properties? If so, generally describe. [help]

No.

c. What kinds of energy conservation features are included in the plans of this proposal? List other proposed measures to reduce or control energy impacts, if any: [help]

Not applicable.

7. Environmental Health [help]

a. Are there any environmental health hazards, including exposure to toxic chemicals, risk of fire and explosion, spill, or hazardous waste, that could occur as a result of this proposal? If so, describe. [help]

It is possible, but unlikely, that fuel or lubricants from the construction equipment could enter the water if the equipment were damaged. The contractor will prepare a SPCC plan to identify procedures to be implemented to avoid, minimize, and, if necessary, respond to any releases.

1) Describe any known or possible contamination at the site from present or past uses. [help]

There are no known indicators of contamination at the site from present or past uses.

2) Describe existing hazardous chemicals/conditions that might affect project development and design. This includes underground hazardous liquid and gas transmission pipelines located within the project area and in the vicinity. [help]

Not applicable.

3) Describe any toxic or hazardous chemicals that might be stored, used, or produced during the project's development or construction, or at any time during the operating life of the project. [help]

Fuel for construction equipment may be stored on site for use during the construction activities.

4) Describe special emergency services that might be required. [help]

Not applicable.

5) Proposed measures to reduce or control environmental health hazards, if any: [help]

Not applicable.

b. Noise [help]

1) What types of noise exist in the area which may affect your project (for example: traffic, equipment, operation, other)? [help]

The site is a public park surrounded by residential properties. Neighborhood traffic, noise from public use of the park, and boating noise from Lake Washington are all present in the area.

2) What types and levels of noise would be created by or associated with the project on a short-term or a long-term basis (for example: traffic, construction, operation, other)? Indicate what hours noise would come from the site. [help]

There will be short-term construction noise from the excavator used to place the small area of riprap at the base of the bulkhead and from the impact hammer used

RP

to install the two piles in addition to noise generated from hand tools. Most of this noise and the noise resulting from worker traffic is commensurate to the existing noise levels in and around the site.

The noise from the small impact hammer during pile installation will represent a short-term localized increase of noise during that work. Work at the site will only be completed during normal work hours during the work week (Monday through Friday) and only during daylight hours.

3) Proposed measures to reduce or control noise impacts, if any: [help]

Bubble curtains will be used during pile installation to reduce noise impacts during that work.

Noise is regulated by BCC 9.18

8. Land and Shoreline Use [help]

a. What is the current use of the site and adjacent properties? Will the proposal affect current land uses on nearby or adjacent properties? If so, describe. [help]

The site is a public park with swimming facilities located at the shoreline (see Sheets 1 and 2).

The adjacent properties to the north, south, and east are occupied by residences. Lake Washington is located to the west of the site.

b. Has the project site been used as working farmlands or working forest lands? If so, describe. How much agricultural or forest land of long-term commercial significance will be converted to other uses as a result of the proposal, if any? If resource lands have not been designated, how many acres in farmland or forest land tax status will be converted to nonfarm or nonforest use? [help]

No.

1) Will the proposal affect or be affected by surrounding working farm or forest land normal business operations, such as oversize equipment access, the application of pesticides, tilling, and harvesting? If so, how: [help]

No.

c. Describe any structures on the site. [help]

Chesterfield Beach Park lies on the east shore of Lake Washington, directly east of the northern tip of Mercer Island. The in-water and waterfront structures at the swim park consist of a 57-foot-long by 6-foot 3-inch-wide pier with a 17-foot by 18-foot 3-inch platform, concrete bulkhead, stairs to the water at the shore end, and four 12-inch-diameter ACZA-treated timber piles that hold the swimming boundary lines in place. See Sheets 1 through 4.

The pier is supported by fourteen 12-inch-diameter ACZA-treated timber plumb piles and three 18x18 concrete footings (Bents 1 through 8). The pier deck consists of a grated surface supported by a 12x12 sub cap, longitudinal 12x12 timber pile cap, and 4x12 timber stringers. A 30-foot timber hand railing is located on the north side of the pier. A concrete bulkhead and stairs to the water are located at the shore end of the pier. Four 12-inch-diameter ACZA-treated timber piles coated with composite sleeves anchor the lines for the swim area.

RP

d. Will any structures be demolished? If so, what? [help]

No.

e. What is the current zoning classification of the site? [help]

Shoreline

f. What is the current comprehensive plan designation of the site? [help]

Public access, shoreline

g. If applicable, what is the current shoreline master program designation of the site? [help]

Public access

h. Has any part of the site been classified as a critical area by the city or county? If so, specify. [help]

Yes, as a shoreline of Lake Washington

i. Approximately how many people would reside or work in the completed project? [help]

There will be no change to the number of people working or residing in the completed project.

j. Approximately how many people would the completed project displace? [help]

None.

k. Proposed measures to avoid or reduce displacement impacts, if any: [help]

Not applicable.

L. Proposed measures to ensure the proposal is compatible with existing and projected land uses and plans, if any: [help]

The site will continue to operate as a recreational park.

m. Proposed measures to ensure the proposal is compatible with nearby agricultural and forest lands of long-term commercial significance, if any: [help]

Not applicable.

9. Housing [help]

a. Approximately how many units would be provided, if any? Indicate whether high, middle, or low-income housing. [help]

Not applicable.

b. Approximately how many units, if any, would be eliminated? Indicate whether high, middle, or low-income housing. [help]

Not applicable.

c. Proposed measures to reduce or control housing impacts, if any: [help]

Not applicable.

RP

10. Aesthetics [help]

a. What is the tallest height of any proposed structure(s), not including antennas; what is the principal exterior building material(s) proposed? [help]

Not applicable.

b. What views in the immediate vicinity would be altered or obstructed? [help]

Not applicable.

c. Proposed measures to reduce or control aesthetic impacts, if any: [help]

Not applicable.

11. Light and Glare [help]

a. What type of light or glare will the proposal produce? What time of day would it mainly occur? [help]

The proposal would not produce any light or glare. The majority of the project work will occur during daylight hours.

b. Could light or glare from the finished project be a safety hazard or interfere with views? [help]

Not applicable.

c. What existing off-site sources of light or glare may affect your proposal? [help]

Not applicable.

d. Proposed measures to reduce or control light and glare impacts, if any: [help]

Not applicable.

12. Recreation [help]

a. What designated and informal recreational opportunities are in the immediate vicinity? [help]

The site is the swimming beach and dock portion of City of Bellevue Chesterfield Beach Park. The waters of Lake Washington are also used for various recreation activities, including boating, fishing, and other water-based activities.

b. Would the proposed project displace any existing recreational uses? If so, describe. [help]

No.

c. Proposed measures to reduce or control impacts on recreation, including recreation opportunities to be provided by the project or applicant, if any: [help]

The project repairs are necessary to keep the popular swimming dock safe and useful to the public. Similarly, the repairs to the bulkhead will protect the shoreline of the upland portion of the swimming area.

RP

13. Historic and cultural preservation [help]

a. Are there any buildings, structures, or sites, located on or near the site that are over 45 years old listed in or eligible for listing in national, state, or local preservation registers located on or near the site? If so, specifically describe. [help]

No.

b. Are there any landmarks, features, or other evidence of Indian or historic use or occupation? This may include human burials or old cemeteries. Are there any material evidence, artifacts, or areas of cultural importance on or near the site? Please list any professional studies conducted at the site to identify such resources. [help]

No.

c. Describe the methods used to assess the potential impacts to cultural and historic resources on or near the project site. Examples include consultation with tribes and the department of archeology and historic preservation, archaeological surveys, historic maps, GIS data, etc. [help]

Review of online records from Washington Information System for Architectural and Archaeological Records Data.

Additionally, the minor maintance activities associated with the project do not include any excavation of previously undisturbed areas.

d. Proposed measures to avoid, minimize, or compensate for loss, changes to, and disturbance to resources. Please include plans for the above and any permits that may be required. [help]

Not applicable.

14. Transportation [help]

a. Identify public streets and highways serving the site or affected geographic area and describe proposed access to the existing street system. Show on site plans, if any. [help]

The site is accessed by the existing 25th Street SE. The project will not impact the street system.

b. Is the site or affected geographic area currently served by public transit? If so, generally describe. If not, what is the approximate distance to the nearest transit stop? [help]

No.

c. How many additional parking spaces would the completed project or non-project proposal have? How many would the project or proposal eliminate? [help]

Not applicable.

d. Will the proposal require any new or improvements to existing roads, streets, pedestrian, bicycle or state transportation facilities, not including driveways? If so, generally describe (indicate whether public or private). [help]

No.

e. Will the project or proposal use (or occur in the immediate vicinity of) water, rail, or air transportation? If so, generally describe. [help]

No.

f. How many vehicular trips per day would be generated by the completed project or proposal? If known, indicate when peak volumes would occur and what percentage of the volume would be trucks (such as commercial and nonpassenger vehicles). What data or transportation models were used to make these estimates? [help]

Not applicable.

g. Will the proposal interfere with, affect or be affected by the movement of agricultural and forest products on roads or streets in the area? If so, generally describe. [help]

No.

h. Proposed measures to reduce or control transportation impacts, if any: [help]

Not applicable.

15. Public Services [help]

a. Would the project result in an increased need for public services (for example: fire protection, police protection, public transit, health care, schools, other)? If so, generally describe. [help]

No

b. Proposed measures to reduce or control direct impacts on public services, if any. [help]

Not applicable.

16. Utilities [help]

a. Circle utilities currently available ~~at the site: [help]~~

electricity, natural gas, water, refuse service, telephone, sanitary sewer, septic system, other _____

Utilities are available on the adjacent upland.

b. Describe the utilities that are proposed for the project, the utility providing the service, and the general construction activities on the site or in the immediate vicinity which might be needed. [help]

Not applicable.

C. Signature [help]

The above answers are true and complete to the best of my knowledge. I understand that the lead agency is relying on them to make its decision.

Signature: _____

Name of signee Victoria R. England

Position and Agency/Organization Authorized Agent, Environmental Scientist, BergerABAM

Date Submitted: _____

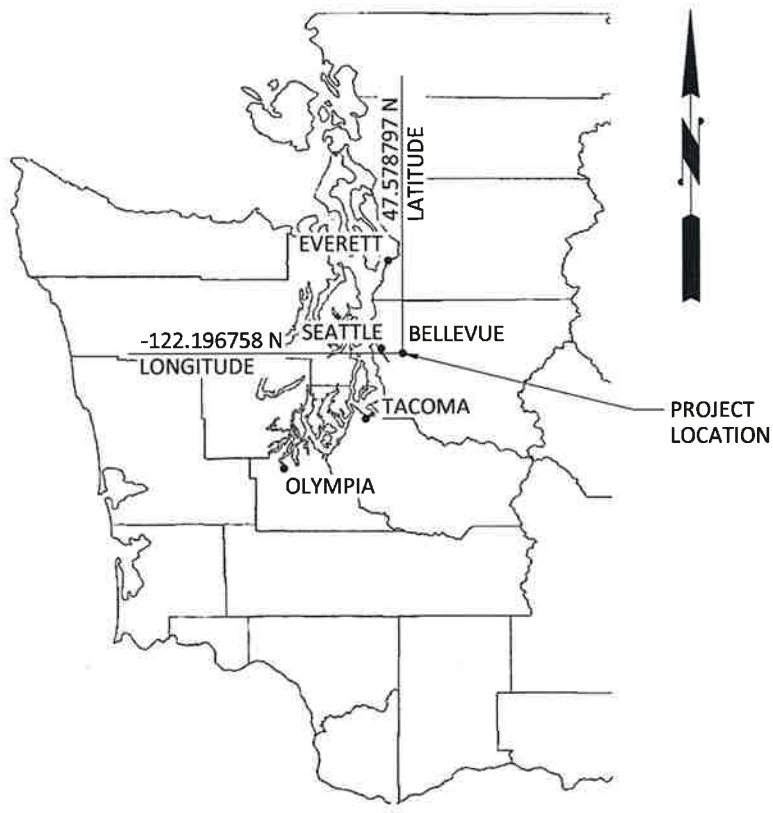

AREA MAP

NOT TO SCALE

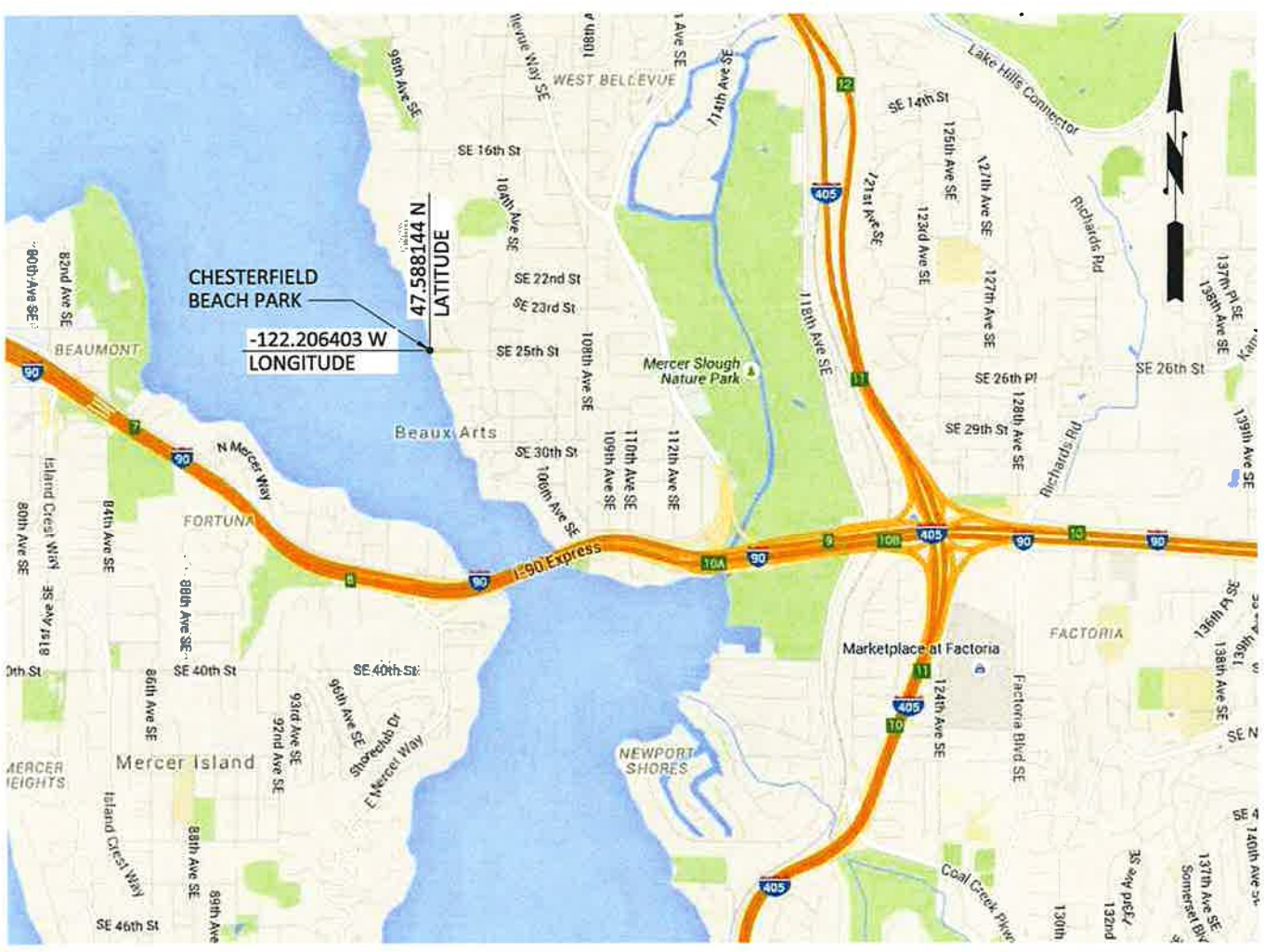

VICINITY MAP

NOT TO SCALE

PURPOSE: Maintenance of Existing Waterfront Structures at CHESTERFIELD BEACH PARK, PILE POST FOOTING AND EROSION CONTROL FILL

DATUM: OHW = 18.8 FT. NAVD88

ADJACENT PROPERTY OWNERS:

1) DAVID L & AMY C FULTON
2) DAVID HWA-YUAN CHANG

SITE PROPERTY OWNER:
City of Bellevue

CHESTERFIELD BEACH PARK
AREA AND VICINITY MAP

CITY OF BELLEVUE PARKS
MAINTENANCE
AND REPAIRS

CITY OF BELLEVUE
PARKS AND COMMUNITY SERVICES
450 110TH AVE NE
BELLEVUE, WA 98009

Township: 24 N
Range: 5 E
Section: 6

Latitude: 47.588144 N
Longitude: -122.206403 W

USACE Reference No:

IN: Lake Washington

AT: Bellevue

COUNTY: King

APPLICATION BY: City of Bellevue

SHEET: 1 OF 4 DATE: 6/1/16

Last Saved by: Jason.mendenhall on: Jan 7, 2016 4:09 PM File: Q:\FederalWay\2015\A15.0033\01\CADD\Dwgs\Jarpa\Sites_Park Beaches\Chesterfield Beach Park\CH_FIG_01.dwg

Received
JUN 10 2016
Permit Processing

AERIAL PHOTO SITE MAP

PURPOSE: Maintenance of Existing Waterfront Structures at CHESTERFIELD BEACH PARK, PILE POST FOOTING AND EROSION CONTROL FILL

DATUM: OHW = 18.8 FT. NAVD88

ADJACENT PROPERTY OWNERS:
1) DAVID L & AMY C FULTON
2) DAVID HWA-YUAN CHANG

SITE PROPERTY OWNER:
City of Bellevue

CHESTERFIELD BEACH PARK
AERIAL SITE VIEW

CITY OF BELLEVUE PARKS
MAINTENANCE
AND REPAIRS

CITY OF BELLEVUE
PARKS AND COMMUNITY SERVICES
450 110TH AVE NE
BELLEVUE, WA 98009

Township: 24 N
Range: 5 E
Section: 6

Latitude: 47.588144 N
Longitude: -122.206403 W

USACE Reference No:

IN: Lake Washington

AT: Bellevue

COUNTY: King

APPLICATION BY: City of Bellevue

SHEET: 2 OF 4 DATE: 6/1/16

Last Saved by: Jason.mendenhall on: Jan 7, 2016 4:09 PM File: Q:\FederalWay\2015\A15.0033\01\CADD\Dwgs\Jarpa\Sites_Park Beaches\Chesterfield Beach Park\CH_FIG_02.dwg

Received
JUN 10 2016
Permit Processing

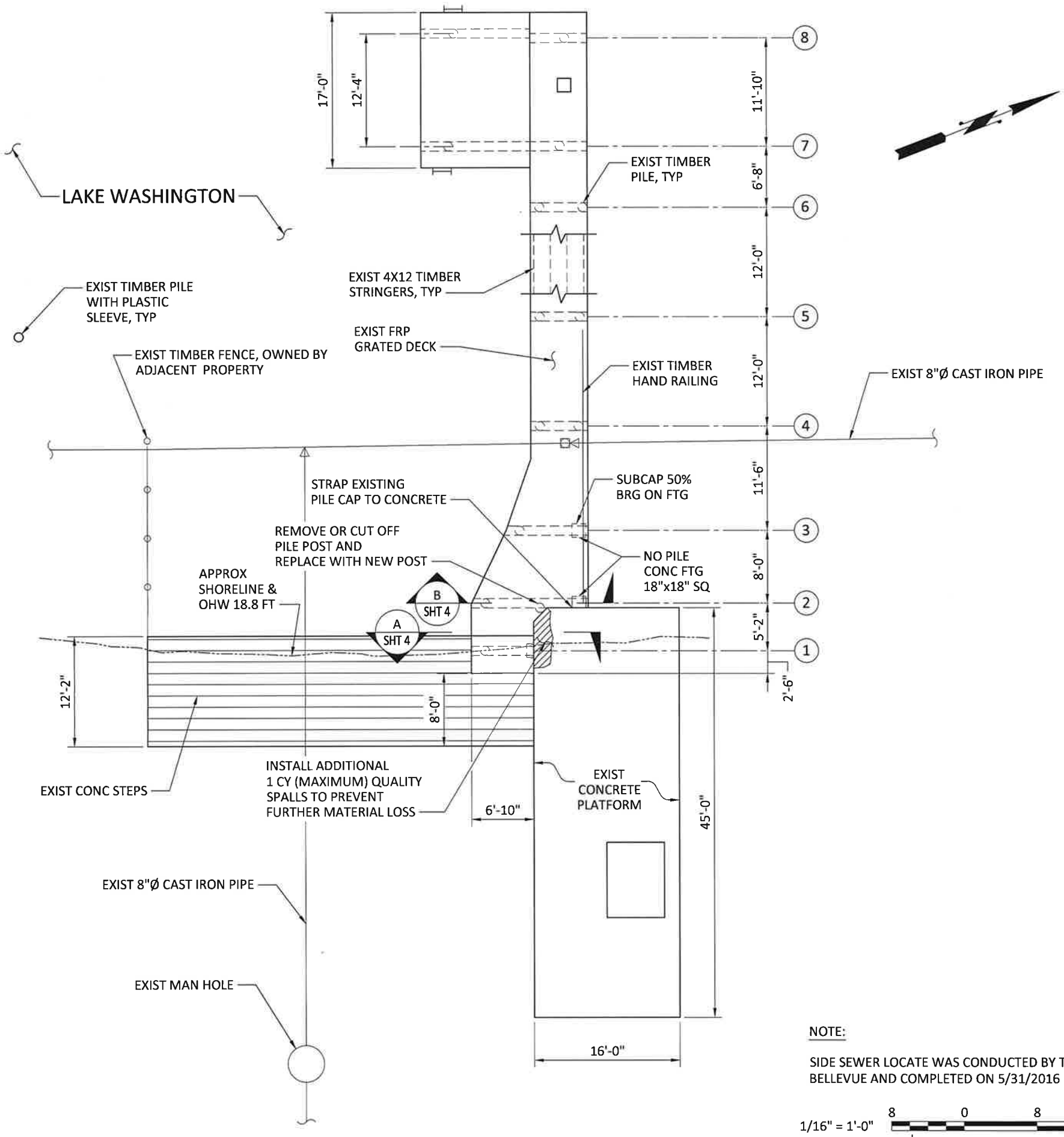

NOTE:

SIDE SEWER LOCATE WAS CONDUCTED BY THE CITY OF BELLEVUE AND COMPLETED ON 5/31/2016

1/16" = 1'-0" 8 0 8 16 scale feet

PURPOSE: Maintenance of Existing Waterfront Structures at CHESTERFIELD BEACH PARK, PILE POST FOOTING AND EROSION CONTROL FILL

DATUM: OHW = 18.8 FT. NAVD88

ADJACENT PROPERTY OWNERS:
1) DAVID L & AMY C FULTON
2) DAVID HWA-YUAN CHANG

SITE PROPERTY OWNER:
City of Bellevue

CHESTERFIELD BEACH PARK
PLAN - EXISTING CONDITIONS
& PROPOSED REPAIRS

CITY OF BELLEVUE PARKS
MAINTENANCE
AND REPAIRS

CITY OF BELLEVUE
PARKS AND COMMUNITY SERVICES
450 110TH AVE NE
BELLEVUE, WA 98009

Township: 24 N
Range: 5 E
Section: 6

Latitude: 47.588144 N
Longitude: -122.206403 W

USACE Reference No:

IN: Lake Washington

AT: Bellevue

COUNTY: King

APPLICATION BY: City of Bellevue

SHEET: 3 OF 4 DATE: 6/1/16

Last Saved by: Garth.nelson on: Jun 1, 2016 8:44 AM File: Q:\FederalWay\2015\A15.0033\01\CADD\Dwgs\Jarpa\Sites_Park Beaches\Chesterfield Beach Park\CH_FIG_03.dwg

Received
JUN 10 2016
Permit Processing

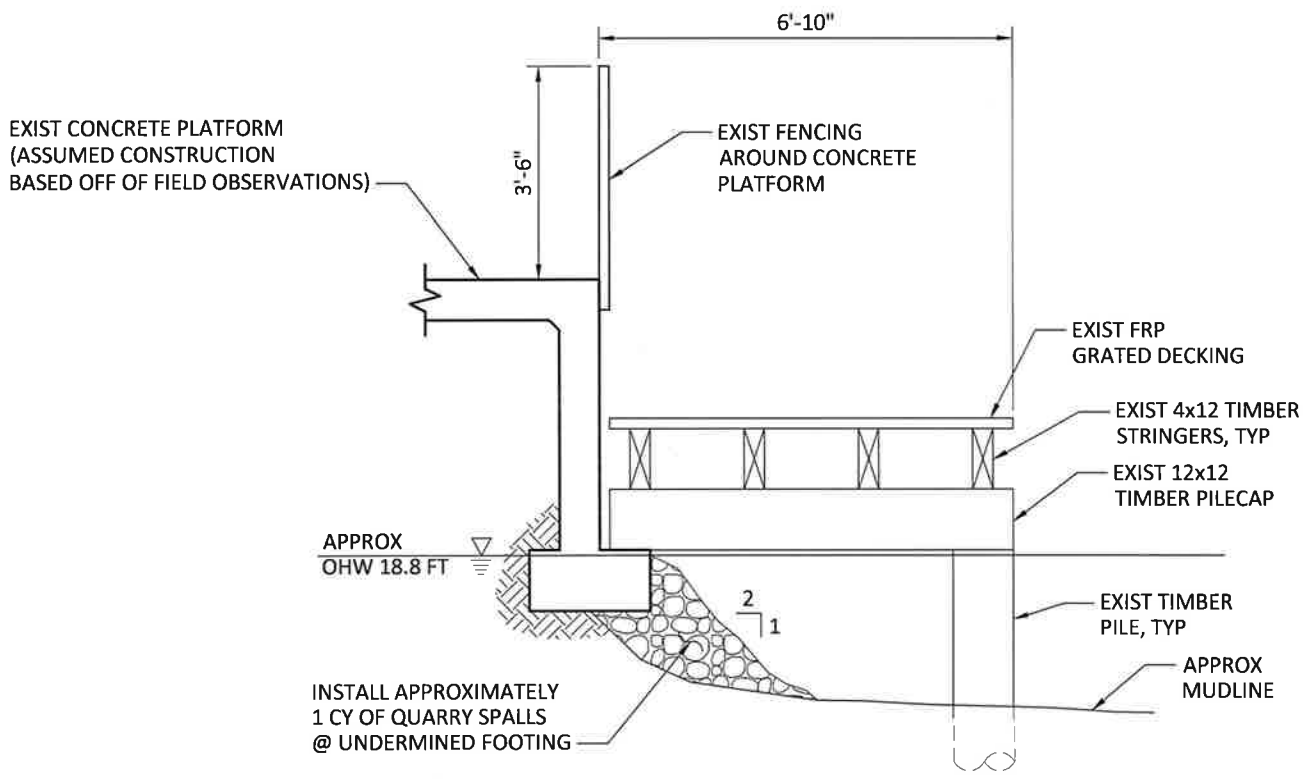

A SHT 3 **SECTION**

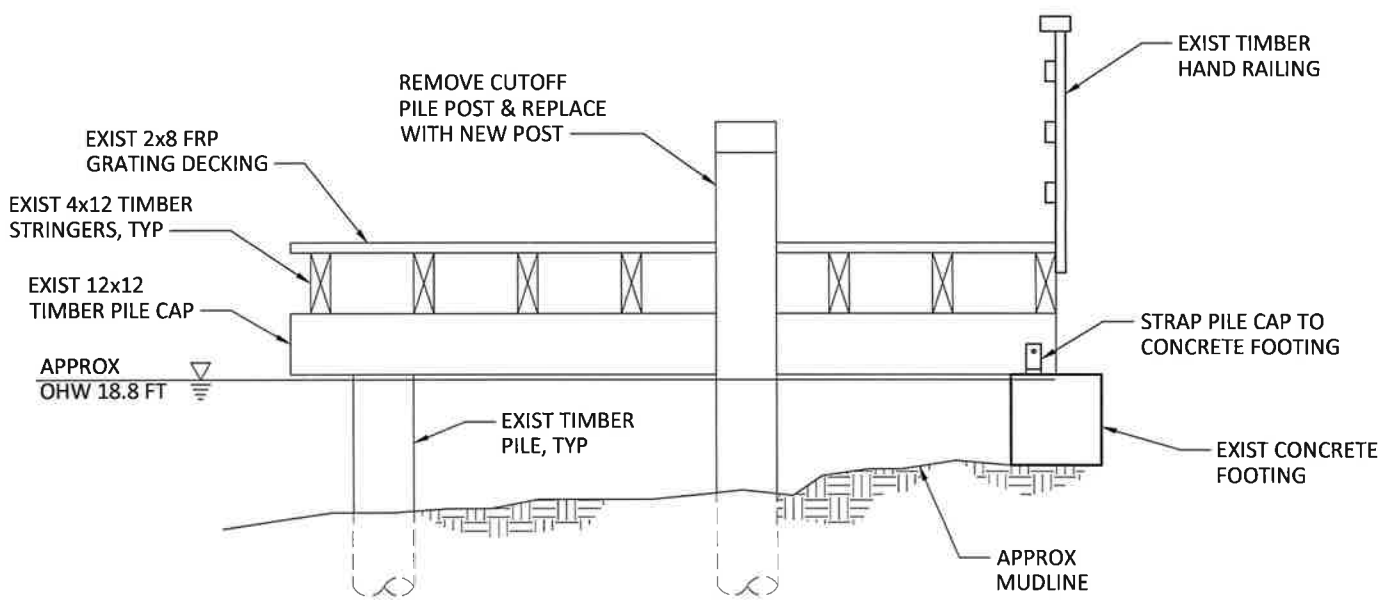

B SHT 3 **SECTION**

1/4" = 1'-0" 2 0 2 4 scale feet

PURPOSE: Maintenance of Existing Waterfront Structures at CHESTERFIELD BEACH PARK, PILE POST FOOTING AND EROSION CONTROL FILL

DATUM: OHW = 18.8 FT. NAVD88

ADJACENT PROPERTY OWNERS:
1) DAVID L & AMY C FULTON
2) DAVID HWA-YUAN CHANG

SITE PROPERTY OWNER:
City of Bellevue

CHESTERFIELD BEACH PARK
SECTION - PROPOSED REPAIRS

CITY OF BELLEVUE PARKS
MAINTENANCE
AND REPAIRS

CITY OF BELLEVUE
PARKS AND COMMUNITY SERVICES
450 110TH AVE NE
BELLEVUE, WA 98009

Township: 24 N
Range: 5 E
Section: 6

Latitude: 47.588144 N
Longitude: -122.206403 W

USACE Reference No:
IN: Lake Washington
AT: Bellevue
COUNTY: King
APPLICATION BY: City of Bellevue
SHEET: 4 OF 4 DATE: 6/1/16

Last Saved by: Garth.nelson on: Feb 12, 2016 9:16 AM File: Q:\FederalWay\2015\A15.0033\01\CADD\Dwgs\JarpalSites_Park Beaches\Chesterfield Beach Park\CH_FIG_04.dwg

Received
JUN 10 2016
Permit Processing

Chesterfield Beach Park – City of Bellevue Parks and Community Services

Views of Shoreline and Dock

Views of Dock

Side View of Swim Platform