DEVELOPMENT SERVICES DEPARTMENT
ENVIRONMENTAL COORDINATOR
450 110th Ave NE
BELLEVUE, WA 98009-9012

DETERMINATION OF NON-SIGNIFICANCE

PROPONENT: Bret Wilson, COB Parks

LOCATION OF PROPOSAL: Enatai Beach Park at 3519 108th Avenue SE

DESCRIPTION OF PROPOSAL: Minor repairs to existing pier and bulkhead including, cleaning, garbage and debris removal, tightening and replacing bolts, 1 cubic yard of riprap placement at bulkhead, and replacement of 10 percent of the deck timbers on the pier.

FILE NUMBERS: 16-126312-WE **PLANNER:** Reilly Pittman

The Environmental Coordinator of the City of Bellevue has determined that this proposal does not have a probable significant adverse impact upon the environment. An Environmental Impact Statement (EIS) is not required under RCW 43.21C.030(2)(C). This decision was made after the Bellevue Environmental Coordinator reviewed the completed environmental checklist and information filed with the Land Use Division of the Development Services Department. This information is available to the public on request.

☐ There is no comment period for this DNS. There is a 14-day appeal period. Only persons who submitted written comments before the DNS was issued may appeal the decision. A written appeal must be filed in the City Clerk's office by 5:00 p.m. on _____.

☒ This DNS is issued after using the optional DNS process in WAC 197-11-355. There is no further comment period on the DNS. There is a 14-day appeal period. Only persons who submitted written comments before the DNS was issued may appeal the decision. A written appeal must be filed in the City Clerk's Office by 5 p.m. on **8/18/2016**

☐ This DNS is issued under WAC 197-11-340(2) and is subject to a 14-day comment period from the date below. Comments must be submitted by 5 p.m. on _____. This DNS is also subject to appeal. A written appeal must be filed in the City Clerk's Office by 5:00 p.m. on _____.

This DNS may be withdrawn at any time if the proposal is modified so as to have significant adverse environmental impacts; if there is significant new information indicating a proposals probable significant adverse environmental impacts (unless a non-exempt license has been issued if the proposal is a private project): or if the DNS was procured by misrepresentation or lack of material disclosure.

Environmental Coordinator

8/4/2016
Date

OTHERS TO RECEIVE THIS DOCUMENT:
☒ State Department of Fish and Wildlife / Stewart.Reinbold@dfw.gov; Christa.Heller@dfw.wa.gov;
☒ State Department of Ecology, Shoreline Planner N.W. Region / Jobu461@ecy.wa.gov; sepaunit@ecy.wa.gov
☒ Army Corps of Engineers Susan.M.Powell@nws02.usace.army.mil
☒ Attorney General ecyolyef@atg.wa.gov
☒ Muckleshoot Indian Tribe Karen.Walter@muckleshoot.nsn.us; Fisheries.fileroom@muckleshoot.nsn.us

City of Bellevue

Post Office Box 90012 ▪ Bellevue, Washington ▪ 98009 9012

Exemption from Shoreline Management Substantial Development Permit Requirement

To: **Bret Wilson**
City of Bellevue Parks Department

Re: **COB Parks Enatai Beach Park Dock and Bulkhead Repair**

File Number: **16-126312-WE**

A DNS was issued under *WAC 197-11-355, using the optional DNS Process. There is no further comment period on the DNS. Appeal period ends on* August 18, 2016

The proposal to undertake the following development:

- **Minor repairs to existing dock and bulkhead inn Lake Washington that serve Enatai Beach Park including cleaning of rust, growth, and garbage, replacing bullrail supports and bolts, replacing less than 10 percent of the dock decking and replacement of less than 1 cubic yard of riprap and concrete behind the sheet pile wall and in front of the bulkhead.**

Within **Lake Washington** and/or its associated wetlands;

Is exempt from the requirement of a substantial development permit because:

- **Development is considered normal repair and maintenance (LUC 20.25E.050.B)**

Inconsistent	Consistent	
	X	Policies of the State Shoreline Management Act (RCW 90.58)
	X	The Bellevue Shoreline Master Program and Comprehensive Plan

Date: **August 4, 2016** Signed

Note: This exemption does not authorize construction to begin. All other required local, state or federal permits must be obtained before construction can begin. All land use code, building code, City shoreline code and other City regulations must be complied with.

CC: DOE, Joe Burcar, 3190 160th Avenue SE, Bellevue, WA 98008-5452
Dept. of Fish and Wildlife, Christa Heller, 1775 12th Ave. NW Suite 201, Issaquah, WA 98027

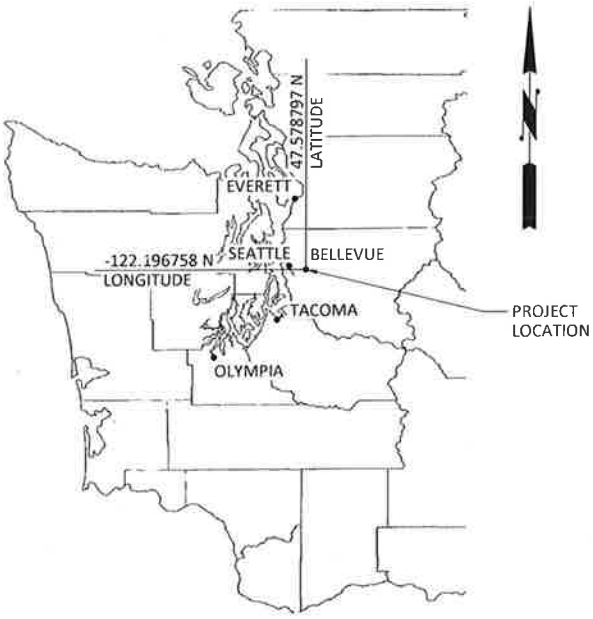

AREA MAP

NOT TO SCALE

Received
MAR 7 2015
Permit Processing

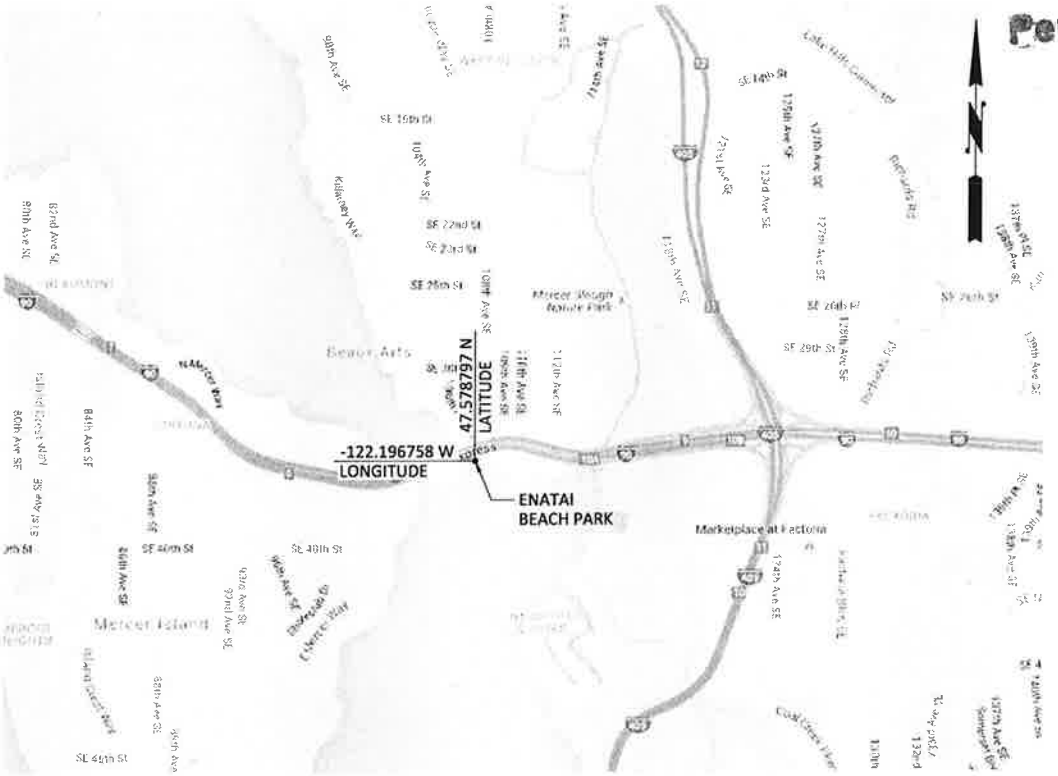

VICINITY MAP

NOT TO SCALE

PURPOSE: Maintenance of Existing Waterfront Structures at ENATAI BEACH PARK, REPLACE TIMBER DECKING, AND FILL UNDERMINED BULKHEAD

DATUM: OHW = 18.8 FT. NAVD88

ADJACENT PROPERTY OWNERS:

1) DICK & LEE SUSAN S YAMAMOTO
2) PUGET SOUND ENERGY

SITE PROPERTY OWNER:
City of Bellevue

ENATAI BEACH PARK
AREA AND VICINITY MAP

CITY OF BELLEVUE PARKS
MAINTENANCE
AND REPAIRS

CITY OF BELLEVUE
PARKS AND COMMUNITY SERVICES
450 110TH AVE NE
BELLEVUE, WA 98009

Township: 24 N
Range: 5 E
Section: 8

Latitude: 47.578797 N
Longitude: -122.196758 W

USACE Reference No:

IN: Lake Washington

AT: Bellevue

COUNTY: King

APPLICATION BY: City of Bellevue

SHEET: 1 OF 6 DATE: 1/7/16

Last Saved by: Jason mendenhall on: Jan 7, 2016 10:06 AM File: Q:\FederalWay\2015\A15.0033\01\CADD\Dwgs\Jarpa\Sites_Park Beaches\Enatai Beach Park\EN_FIG_01.dwg

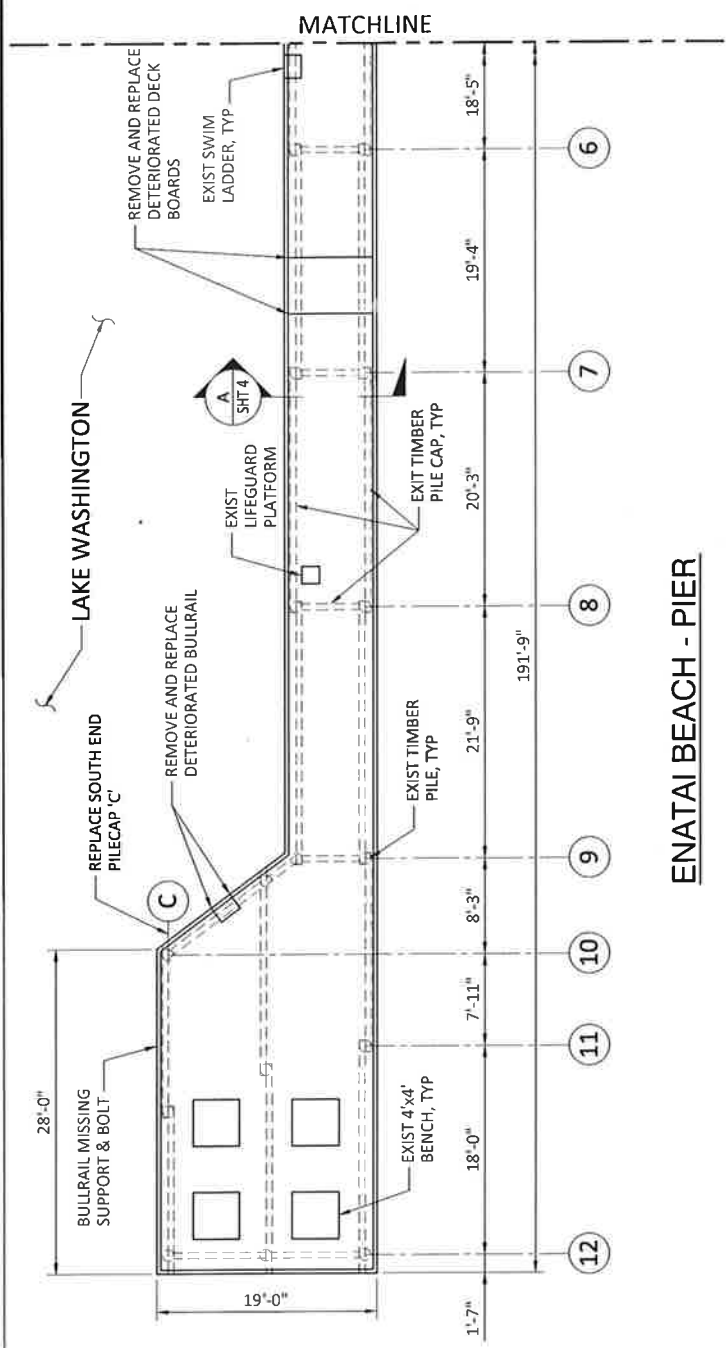

ENATAI BEACH - PIER

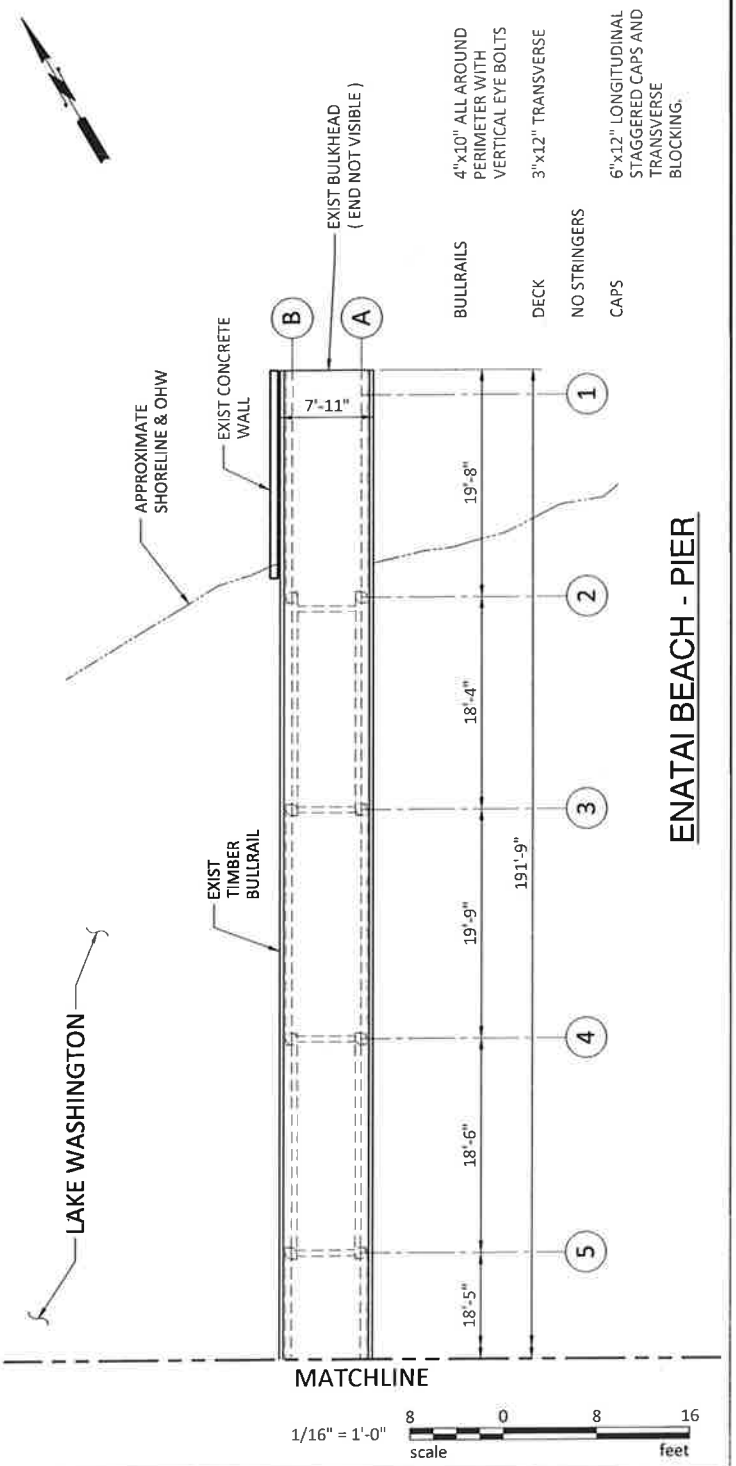

ENATAI BEACH - PIER

1/16" = 1'-0" scale 8 0 8 16 feet

PURPOSE: Maintenance of Existing Waterfront Structures at ENATAI BEACH PARK, REPLACE TIMBER DECKING, AND FILL UNDERMINED BULKHEAD

DATUM: OHW = 18.8 FT. NAVD88

ADJACENT PROPERTY OWNERS:
1) DICK & LEE SUSAN S YAMAMOTO
2) PUGET SOUND ENERGY

SITE PROPERTY OWNER:
City of Bellevue

ENATAI BEACH PARK
PLAN - EXISTING CONDITIONS
& PROPOSED REPAIRS

CITY OF BELLEVUE PARKS
MAINTENANCE
AND REPAIRS

CITY OF BELLEVUE
PARKS AND COMMUNITY SERVICES
450 110TH AVE NE
BELLEVUE, WA 98009

Township: 24 N
Range: 5 E
Section: 8

Latitude: 47.578797 N
Longitude: -122.196758 W

USACE Reference No:
IN: Lake Washington
AT: Bellevue
COUNTY: King
APPLICATION BY: City of Bellevue
SHEET: 3 OF 6 DATE: 1/7/16

Last Saved by: Jason mendenhall on: Jan 7, 2016 3:06 PM File: Q:\FederalWay\2015\A15 0033\01\CADD\Dwgs\Jarpa\Sites_Park Beaches\Enatai Beach Park\EN_FIG_03.dwg

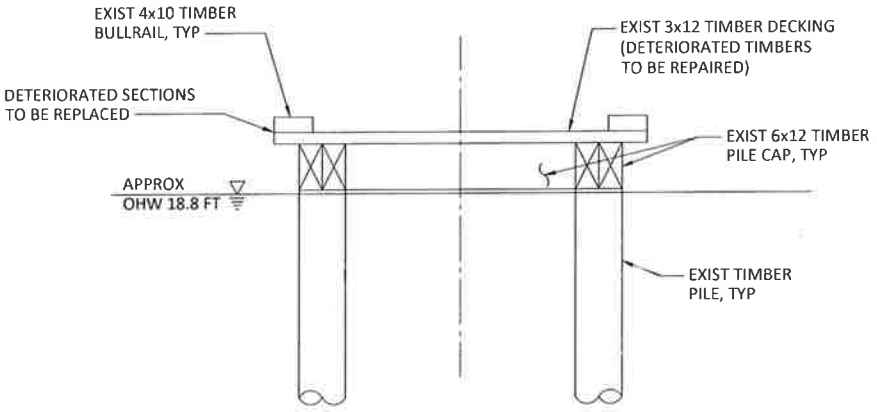

A SHT 3 **SECTION**

1/4" = 1'-0" 2 0 2 4 scale feet

PURPOSE: Maintenance of Existing Waterfront Structures at ENATAI BEACH PARK, REPLACE TIMBER DECKING, AND FILL UNDERMINED BULKHEAD

DATUM: OHW = 18.8 FT. NAVD88

ADJACENT PROPERTY OWNERS:
1) DICK & LEE SUSAN S YAMAMOTO
2) PUGET SOUND ENERGY

SITE PROPERTY OWNER:
City of Bellevue

ENATAI BEACH PARK
SECTION - PROPOSED REPAIRS

CITY OF BELLEVUE PARKS MAINTENANCE AND REPAIRS

CITY OF BELLEVUE
PARKS AND COMMUNITY SERVICES
450 110TH AVE NE
BELLEVUE, WA 98009

Township: 24 N
Range: 5 E
Section: 8

Latitude: 47.578797 N
Longitude: -122.196758 W

USACE Reference No:
IN: Lake Washington
AT: Bellevue
COUNTY: King
APPLICATION BY: City of Bellevue
SHEET: 4 OF 6 DATE: 1/7/16

Last Saved by: Jason mendenhall on: Jan 7, 2016 3:06 PM File: Q:\FederalWay\2015\A15 0033\01\CADD\Dwgs\Jarpa\Sites_Park Beaches\Enatai Beach Park\EN_FIG_04.dwg

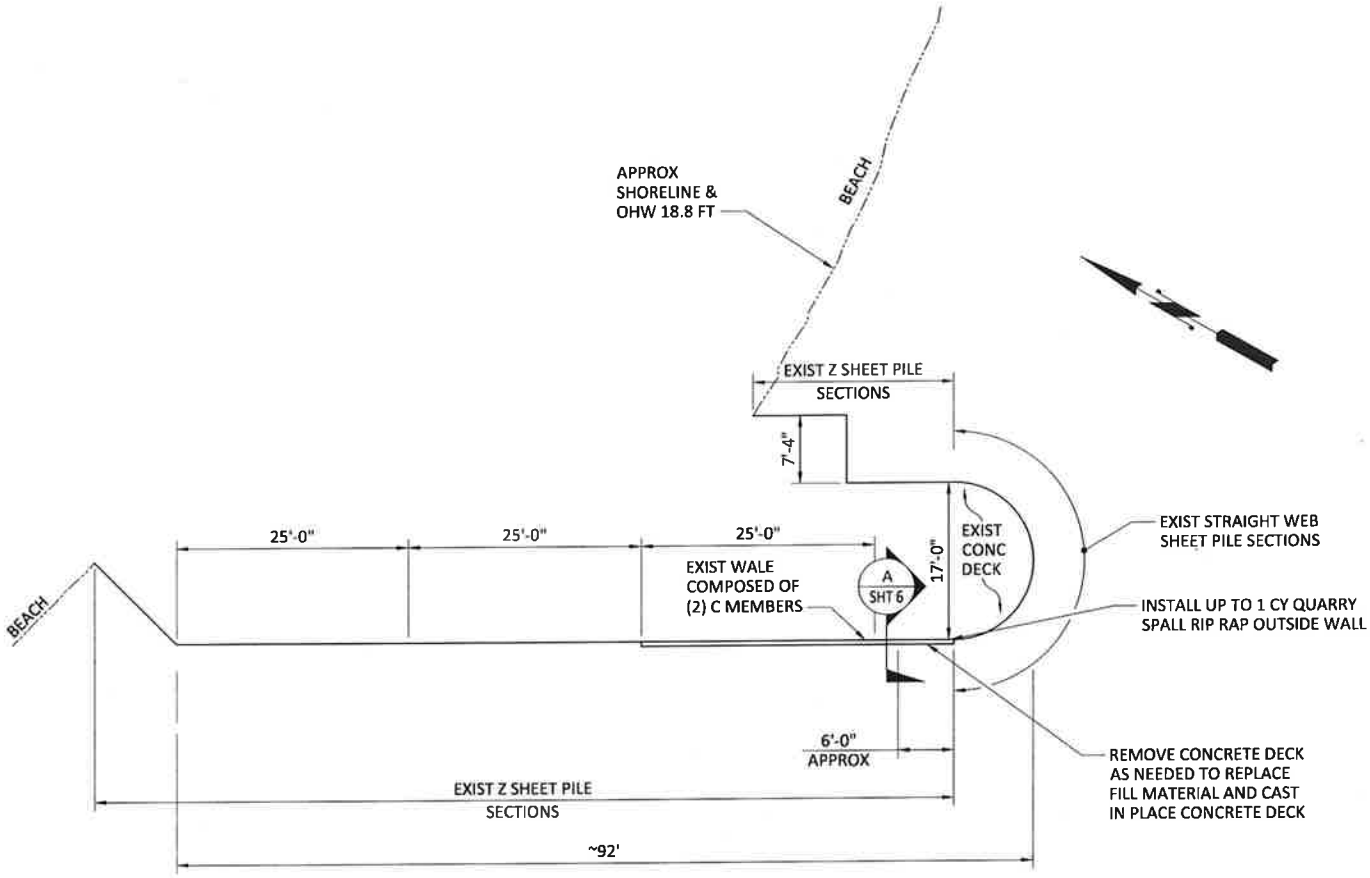

ENATAI BEACH - SHEET PILE WALL

1" = 20' 10 0 10 20 scale feet

PURPOSE: Maintenance of Existing Waterfront Structures at ENATAI BEACH PARK, REPLACE TIMBER DECKING, AND FILL UNDERMINED BULKHEAD

DATUM: OHW = 18.8 FT. NAVD88

ADJACENT PROPERTY OWNERS:
1) DICK & LEE SUSAN S YAMAMOTO
2) PUGET SOUND ENERGY

SITE PROPERTY OWNER:
City of Bellevue

ENATAI BEACH PARK
SHEET PILE WALL - EXISTING CONDITIONS & PROPOSED REPAIRS

CITY OF BELLEVUE PARKS MAINTENANCE AND REPAIRS

CITY OF BELLEVUE
PARKS AND COMMUNITY SERVICES
450 110TH AVE NE
BELLEVUE, WA 98009

Township: 24 N
Range: 5 E
Section: 8

Latitude: 47.578797 N
Longitude: -122.196758 W

USACE Reference No:
IN: Lake Washington
AT: Bellevue
COUNTY: King
APPLICATION BY: City of Bellevue
SHEET: 5 OF 6 DATE: 1/7/16

Last Saved by: Jason mendenhall on: Jan 7, 2016 3:06 PM File: Q:\FederalWay\2015\A15.0033\01\CADD\Dwgs\Jarpa\Sites_Park Beaches\Enatai Beach Park\EN_FIG_05.dwg

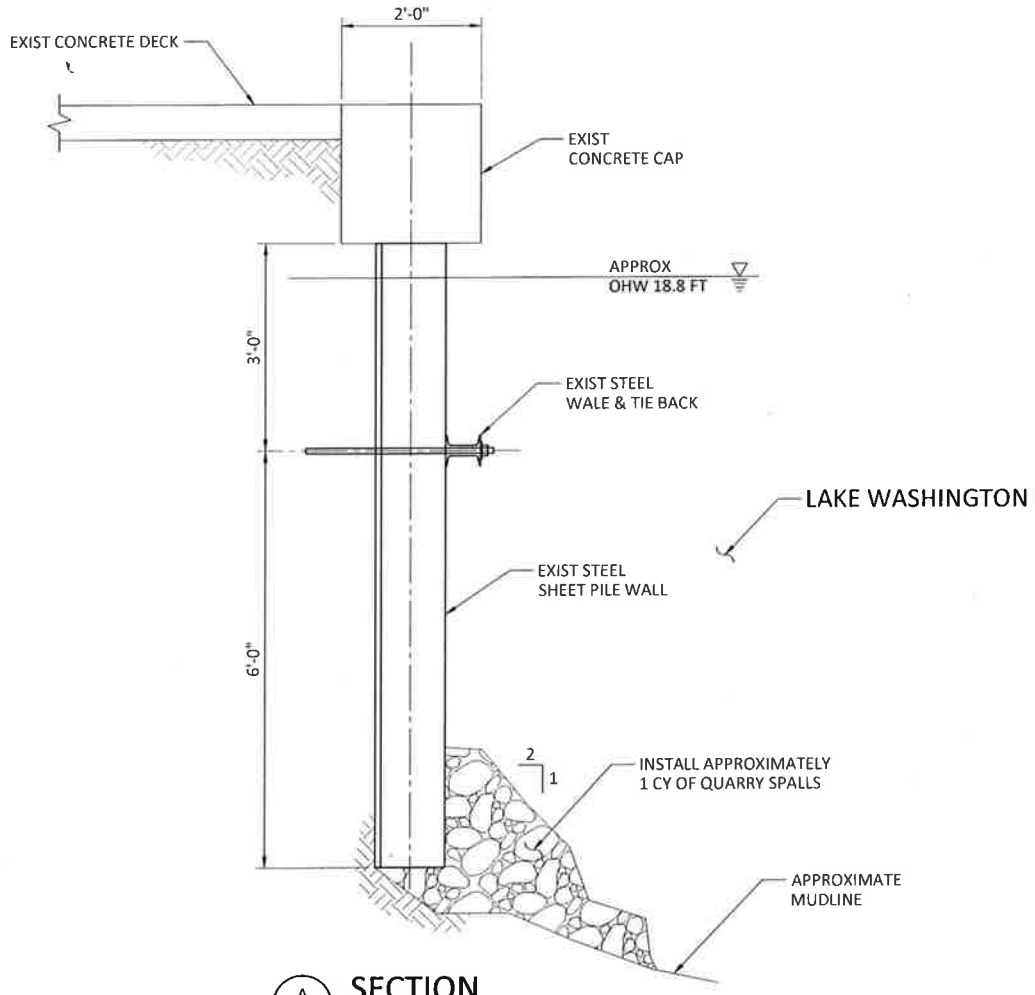

A
SHT 5
SECTION

3/8" = 1'-0"
1 0 1 2
scale feet

PURPOSE: Maintenance of Existing Waterfront Structures at ENATAI BEACH PARK, REPLACE TIMBER DECKING, AND FILL UNDERMINED BULKHEAD

DATUM: OHW = 18.8 FT. NAVD88

ADJACENT PROPERTY OWNERS:
1) DICK & LEE SUSAN S YAMAMOTO
2) PUGET SOUND ENERGY

SITE PROPERTY OWNER:
City of Bellevue

ENATAI BEACH PARK
SECTION - PROPOSED REPAIRS

CITY OF BELLEVUE PARKS
MAINTENANCE
AND REPAIRS

CITY OF BELLEVUE
PARKS AND COMMUNITY SERVICES
450 110TH AVE NE
BELLEVUE, WA 98009

Township: 24 N
Range: 5 E
Section: 8

Latitude: 47.578797 N
Longitude: -122.196758 W

USACE Reference No:
IN: Lake Washington
AT: Bellevue
COUNTY: King
APPLICATION BY: City of Bellevue
SHEET: 6 OF 6 DATE: 1/7/16

Last Saved by: Jason.mendenhall on: Jan 7, 2016 3:06 PM File: Q:\FederalWay\2015\A15.0033\01\CADD\Dwgs\Jarpa\Sites_Park Beaches\Enatai Beach Park\EN_FIG_06.dwg