DEVELOPMENT SERVICES DEPARTMENT
ENVIRONMENTAL COORDINATOR
450 110th Ave NE., P.O. BOX 90012
BELLEVUE, WA 98009-9012

OPTIONAL DETERMINATION OF NON-SIGNIFICANCE (DNS) NOTICE MATERIALS

The attached materials are being sent to you pursuant to the requirements for the Optional DNS Process (WAC 197-11-355). A DNS on the attached proposal is likely. This may be the only opportunity to comment on environmental impacts of the proposal. Mitigation measures from standard codes will apply. Project review may require mitigation regardless of whether an EIS is prepared. A copy of the subsequent threshold determination for this proposal may be obtained upon request.

File No. 15-130016-LO

Project Name/Address: NE Spring Blvd – Roadway Improvements

Planner: Reilly Pittman

Phone Number: 425-452-4350

Minimum Comment Period: January 28, 2016

Materials included in this Notice:

- ☒ Blue Bulletin
- ☒ Checklist
- ☒ Vicinity Map
- ☒ Plans
- ☐ Other:

OTHERS TO RECEIVE THIS DOCUMENT:

- ☒ State Department of Fish and Wildlife / Sterwart.Reinbold@dfw.gov; Christa.Heller@dfw.wa.gov;
- ☒ State Department of Ecology, Shoreline Planner N.W. Region / Jobu461@ecy.wa.gov; sepaunit@ecy.wa.gov
- ☒ Army Corps of Engineers Susan.M.Powell@nws02.usace.army.mil
- ☒ Attorney General ecyolyef@atg.wa.gov
- ☒ Muckleshoot Indian Tribe Karen.Walter@muckleshoot.nsn.us; Fisheries.fileroom@muckleshoot.nsn.us

13092 — job. no.: | 01/08/16 — date:
1 of 1 — sheet: | SLB — drawn by:
ACAD File: 13092 NE 15TH ROW.DWG

City of Bellevue
Civic Services Department

NE SPRING BLVD

ZONES 1 and 2
Section 28, T.25 N., R.05 E., W.M.
King County, Washington

ZONE 1A
ZONE 1B
ZONE 2
EAST LINK
EAST LINK
EAST LINK
NE SPRING BLVD
NE SPRING BLVD
SOUND TRANSIT
SOUND TRANSIT
116TH AVE NE
116TH AVE NE
116TH AVE NE
120TH AVE NE
120TH AVE NE
124TH AVE NE
124TH AVE NE
124TH AVE NE
NE 12TH ST
NE 12TH ST
NE 12TH ST
CPS RTA (SOUND TRANSIT) 11804 NE 12TH ST (6750)
WALLACE PROPERTIES WA PARK 1407 116TH AVE NE
6753 CASCADE MEDICAL ASSOCIATES, LLC 1414 116TH AVE NE
6752 PUGET SOUND ENERGY 1436 116TH AVE NE
6751 CITY OF BELLEVUE TRANSPORTATION 11608 NE 12TH ST
COB UTILITIES 11608 NE 12TH ST
DELTA INTERNATIONAL ENTERPRISES, LLC 11730 NE 12TH ST
6757 1400 116TH Ave NE DIAGNOSTIC HOLDINGS, LLC
6754 11711 NE 12TH ST BELLEVUE PROF. ARTS BUILDING ASSOC.
6672 C C B UT CITIES 11794 NE 12TH ST
6183N PINE FOREST PROPERTIES, INC. (TELEDESIC) 1099100005
6183 1099100001
6184 PINE FOREST TRANSITORY CO. 1099100025
WR-SRI 120TH LLC 1121 124TH AVE NE 0671000010 6291
TRACT A
TRACT C
TRACT D
TRACT F
TRACT G
TRACT H
TRACT J
200' 100' 0' 200'
Scale: 1 inch = 200 feet

SEPA Checklist reviewed by Reilly Pittman on 1/11/2016

City of Bellevue Submittal Requirements	27a

ENVIRONMENTAL CHECKLIST

12/18/2015

If you need assistance in completing the checklist or have any questions regarding the environmental review process, please visit or call Development Services (425-452-6800) between 8 a.m. and 4 p.m., Monday through Friday (Wednesday, 10 to 4). Assistance for the hearing impaired: Dial 711 (Telecommunications Relay Service). .

BACKGROUND INFORMATION

Property Owner: City of Bellevue

Proponent: City of Bellevue

Contact Person: Steve Costa
(If different from the owner. All questions and correspondence will be directed to the individual listed.)

Address: P.O. Box 90012 Bellevue, WA 98009

Phone:425-452-2845

Proposal Title: NE Spring Boulevard Multi-Modal Corridor

Proposal Location: From 116th Avenue NE to 124th Avenue NE.
(Street address and nearest cross street or intersection) Provide a legal description if available.

Please attach an 8 ½" x 11" vicinity map that accurately locates the proposal site.

Give an accurate, brief description of the proposal's scope and nature:

1. General description: The NE Spring Boulevard Multi-Modal Corridor project will create a new east-west roadway between 116th Avenue NE and 124th Avenue NE in the City of Bellevue, Washington. The proposed roadway cross section of NE Spring Boulevard from 116th Avenue and 120th Avenue NE will include two travel lanes in each direction with a separated multi-use path on the north side and sidewalk on the south side. Between 120th Avenue NE and 124th Avenue NE, the cross section will feature two travel lanes in each direction with widened outside lanes for shared bicycle use and a wide sidewalk on both sides. In addition, the new corridor will feature five new signalized intersections (NE 12th Street, 120th Avenue NE, 121st Avenue NE, 123rd Avenue NE, and 124th Avenue NE) connected to the city's traffic adaptive control system, right turn pockets and center turn lanes where appropriate, urban landscaping, lighting, and stormwater treatment and drainage facilities consistent with the Bel-Red Corridor design standards. New utilities will be installed to accommodate stormwater, water, sewer, underground electricity, telephone, and natural gas. These new mainline services will require connection to the existing system on either end of the project. The NE Spring Boulevard Multi-Modal project is one of several high-priority transportation improvements that resulted from the City of Bellevue's Bel-Red Corridor Plan to address residential and commercial growth anticipated in the Bel-Red area. The project is composed of three zones (see Figure 1):

- Zone 1A begins at 116th Avenue NE and extends east to the western edge of the Sound Transit East Link light rail corridor. Zone 1A includes the widening of NE 12th Street to a new intersection where NE Spring Boulevard will meet NE 12th Street, and the segment of NE Spring Boulevard spanning between NE 12th Street and the East Link light rail corridor. This zone will be built by a contractor selected by the City of Bellevue and will take approximately 18 months to complete. Zone 1A will be

RP

the second phase of construction. A temporary gravel access road will be constructed as part of this project. The temporary access road will begin at the end of the driveway of the Delta property located off NE 12th Street and cross Sound Transit's track, extending east for approximately 130 feet. This access road will remain at the site for 18 months.

- Zone 1B begins where Zone 1A ends, at the western edge of the East Link light rail corridor, spanning east to a new intersection with 120th Avenue NE. Zone 1B includes two bridges separated by an in-fill structure. Zone 1B will be built by a contractor selected by the City of Bellevue and will take approximately 15 months. This zone will be the first phase of construction.

- Zone 2 creates the fourth leg and continues east from the new intersection of 120th Avenue NE where Zone 1B ends, passing through the future Spring District development area, and ending at a new intersection with 124th Avenue NE. Zone 2 will be constructed after zones 1A and 1B are complete. The contractor for this phase of construction is unknown and the construction schedule is subject to change.

2. **Acreage of site:** 8.65 acres

3. **Number of dwelling units/buildings to be demolished:**

   Three commercial structures will be demolished, one in each of the three zones:

   - The Delta International Tech Industries building (Parcel # 282505-9207) located in Zone 1A where NE Spring Boulevard ties into NE 12th Street. Demolition will be accomplished by a contractor selected by the City of Bellevue.
   - The Teledesic buildings (Parcel # 1099100005) located in Zone 1B. Sound Transit's environmental review and approval for the East Link project previously identified parcel impacts and demolition.
   - The former Safeway distribution warehouse (Parcel # 0671000000) located in Zone 2. Sound Transit's environmental review and approval for the East Link project previously identified parcel impacts and demolition.

   Tenants of these properties have been, are being or will be relocated in accordance with the Uniform Act.

4. **Number of dwelling units/buildings to be constructed:**

   No buildings will be constructed as part of the proposed project.

5. **Square footage of buildings to be demolished:** 23, 593 square feet.

6. **Square footage of buildings to be constructed:** No buildings will be constructed as part of the project.

7. **Quantity of earth movement (in cubic yards):** 71,156 cubic yards

8. **Proposed land use:** The proposed project is a new five-lane roadway, sidewalks, urban landscaping and a multipurpose pathway.

9. **Design features, including building height, number of stories and proposed exterior materials:**

No buildings will be constructed as part of the proposed project.

10. **Other**

RP

Estimated date of completion of the proposal or timing of phasing:

Construction timing for Zone 2 is dependent on future funding and other factors. Current anticipated timing and phasing for completion of Zone 1 is as follows:

- Demolition of Teledesic – 2016
- Construction of NE Spring Blvd Zone 1b – 2017
- Demolition of Delta – 2017
- Construction of NE Spring Blvd Zone 1a – 2018

Do you have any plans for future additions, expansion, or further activity related to or connected with this proposal? If yes, explain.

This project is being coordinated with segment E335 of the Sound Transit East Link light rail project, the Spring District Development proposed by Wright Runstad, the City of Bellevue Transportation Division Improvement projects for the 120th Avenue NE Corridor and the 124th Avenue NE Improvement Project.

List any environmental information you know about that has been prepared, or will be prepared, directly related to this proposal.

- Critical Areas Study (HDR 2015)
- Drainage Report (HDR 2015)
- Air quality Technical Memorandum (HDR 2015)
- Noise Technical Memorandum (HDR 2015)
- Cultural Resources (Tierra Right of Way Services Ltd)
- Land Use/Displacement Relocation (HDR 2015)
- Environmental Justice Technical Memorandum (2015)

- City of Bellevue Bel-Red Corridor Project Draft Environmental Impact Statement (DEIS) (2007)
- City of Bellevue Bel-Red Corridor Project Final EIS (FEIS) (2007)
- City of Bellevue Transportation Facilities Plan FEIS (2013)

- Sound Transit Eastlink DEIS (2008)
- Sound Transit Eastlink Supplemental DEIS (SDEIS) (2010)
- Sound Transit Eastlink Record Of Decision (ROD) by Federal Transit Administration (FTA) (2011)
- Sound Transit Eastlink ROD by FHWA (2011)
- Sound Transit Eastlink FEIS (2011)

Do you know whether applications are pending for governmental approvals of other proposals directly affecting the property covered by your proposal? If yes, explain. List dates applied for and file numbers, if known.

No governmental approvals are currently pending for the proposed project.

List any government approvals or permits that will be needed for your proposal, if known. If permits have been applied for, list application date and file numbers, if known.

City of Bellevue, Right-of-way use permit
City of Bellevue, Critical Areas Land Use permit
City of Bellevue, Structural Wall Building permit
City of Bellevue, Clearing and Grading permit
City of Bellevue, Utilities Extension permit

National Pollutant Discharge Elimination System (NPDES) permit
Air Space Lease from Sound Transit

Please provide one or more of the following exhibits, if applicable to your proposal.
(Please check appropriate box(es) for exhibits submitted with your proposal):

RP

☐ Land Use Reclassification (rezone) Map of existing and proposed zoning

☐ Preliminary Plat or Planned Unit Development
Preliminary plat map

X Clearing & Grading Permit
Plan of existing and proposed grading
Development plans

☐ Building Permit (or Design Review)
Site plan
Clearing & grading plan

☐ Shoreline Management Permit
Site plan

A. ENVIRONMENTAL ELEMENTS

1. Earth

a. General description of the site: Flat X Rolling ☐ Hilly ☐ Steep slopes ☐ Mountains ☐ Other

b. What is the steepest slope on the site (approximate percent slope)?

The steepest slope on site is less than 5% and located at 116th Avenue NE at approximately Elevation 188 feet and slopes down to approximately 160 feet at the west side of the Sound Transit rail corridor. See the Geotechnical Engineering Report (GeoEngineers 2014) for more details.

c. What general types of soil are found on the site (for example, clay, sand, gravel, peat, and muck)? If you know the classification of agricultural soils, specify them and note any prime farmland.

Soils in the project area are mapped as Alderwood gravelly sandy loam (8 to 15 percent slopes), Urban land and Tukwila muck (USDA 2015).

d. Are there surface indications or history of unstable soils in the immediate vicinity? If so, describe.

The soils in the project area contain a high percentage of fines (silt and clay) and are moisture–sensitive which causes soils to become muddy and unstable when moisture content is a few percent above optimum. It will be difficult to operate equipment on these soils and meet compaction criteria. See Geotechnical Engineering Report (GeoEngineers 2014) for more details.

e. Describe the purpose, type, and approximate quantities of any filling or grading proposed. Indicate source of fill.

The 1B portion of the project is built primarily on fill material and structures. 1A and Zone 2 are built fairly close to grade and have minimal fill quantities. The fill material for the project will consist of structural backfill and gravel borrow. This material will be used through the east abutment section of the project to administer a 60 day preloading activity to consolidate settlement of the area prior to the abutment and bridge construction. The source of fill is determined by the contractor that is ultimately selected to construct the project and therefore is not known at this time. The CADMAN site is close to the project vicinity and may be an option for the fill material.

Fill

Purpose	Type of fill	Quantity (CY)	Source of fill
ZONE 1 - Roadway (12th to 120th)	Gravel Borrow Incl. Haul/Gravel Backfill for Structural Earth Wall	33,923 CY	Chosen by contractor
ZONE 1 - Sidewalk (12th to 120th)	Gravel Backfill for Structural Earth Wall	16,307 CY	

RP

ZONE 1 - Area Outside of Roadway/Sidewalk	Gravel Borrow Incl. Haul	6,970 CY
ZONE 1 - Full Depth Roadway (on 12th)	N/A	0
ZONE 1 - Overlay Roadway (on 12th)	N/A	0
ZONE 1 - Sidewalk (on 12th)	Gravel Borrow Incl. Haul/Gravel Backfill for Structural Earth Wall	35 CY
ZONE 2 - Spring Blvd Roadway	Gravel Borrow Incl. Haul	782 CY
ZONE 2 - Spring Blvd Sidewalk	Gravel Borrow Incl. Haul	950 CY
ZONE 2 - 124th Roadway	Gravel Borrow Incl. Haul	60 CY
ZONE 2 - 124th Sidewalk	Gravel Borrow Incl. Haul	82 CY

Grading (Cut)

Purpose	Type of cut	Quantity (CY)
ZONE 1 - Roadway (12th to 120th)	Existing ground/pavement	91 CY
ZONE 1 - Sidewalk (12th to 120th)	Existing ground/pavement	15 CY
ZONE 1 - Area Outside of Roadway/Sidewalk	Existing ground	29 CY
ZONE 1 - Full Depth Roadway (on 12th)	Existing roadway	654 CY
ZONE 1 - Overlay Roadway (on 12th)	Existing roadway	192 CY
ZONE 1 - Sidewalk (on 12th)	Existing ground	312 CY
ZONE 2 - Spring Blvd Roadway	Existing ground/pavement	7,096 CY
ZONE 2 - Spring Blvd Sidewalk	Existing ground/pavement	3,283 CY
ZONE 2 - 124th Roadway	Existing roadway	364 CY
ZONE 2 - 124th Sidewalk	Existing ground	10 CY

f. Could erosion occur as a result of clearing, construction, or use? If so, generally describe.

Minor surface erosion could occur as a result of construction activities and vegetation removal in the project area. All applicable best management practices (BMPs) and temporary erosion and sediment control will be required and defined in the engineering plans for the project.

g. About what percent of the site will be covered with impervious surfaces after project construction (for example, asphalt or buildings)?

The project will result in an overall reduction in impervious surface. The corridor is currently covered by approximately 6.89 acres of paved surface. Approximately 5.96 acres (69%) of the project area will be covered with imperious surfaces after project construction.

h. Proposed measures to reduce or control erosion, or other impacts to the earth, if any:

Temporary erosion and sediment control measures will be employed during construction, following the guidance and requirements in the Stormwater Management Manual for Western Washington (Ecology 2012). A Construction Stormwater Pollution Prevention Plan (CSWPPP) has been prepared and includes a Temporary Erosion and Sediment Control (TESC) Plan and a Spill Prevention and Countermeasures Control (SPCC) Plan for implementation on site.

RP

2. AIR

a. What types of emissions to the air would result from the proposal (i.e. dust, automobile odors, and industrial wood smoke) during construction and when the project is completed? If any, generally describe and give approximate quantities if known.

Construction activities can cause minor short-term increases in air pollutant emissions during demolition and installation of specific project elements. The construction contractor will be required to comply with all local, state, and federal regulations concerning air pollution abatement related to demolition and construction activities, and projects that require earthwork or otherwise have the potential to create fugitive dust are required to use BMPs to control dust.

No long term air quality impacts are anticipated as a result of the project. See Air Quality Technical Report (HDR 2015) for more details.

b. Are there any off-site sources of emissions or odor that may affect your proposal? If so, generally describe.

No off-site sources of emissions or odor are known to affect this proposal.

c. Proposed measures to reduce or control emissions or other impacts to the air, if any:

No long-term air quality impacts are anticipated as a result of the project therefore no mitigation is required. Mitigation measures for potential short-term construction impacts include BMPs for dust suppression. To reduce effects of construction delays on traffic flow and resulting emissions, road or lane closures should be restricted to non-peak periods when possible.

3. WATER

a. Surface

(1) Is there any surface water body on or in the immediate vicinity of the site (including year-round and seasonal streams, saltwater, lakes, ponds, wetlands)? If yes, describe type and provide names. If appropriate, state what stream or river it flows into.

The West Tributary is the only stream located within the project area. The stream is a perennial stream that originates in a wetland located west of 120th Avenue NE between the WW Gainger facility and Lowe's Hardware and generally flows east for approximately 2,000 feet before it crosses 124th Avenue NE in a 48-inch circular petal pipe (CMP) culvert. A flow control structure maintained by King County Metro is attached to the inlet of the 48-inch culvert. The flow control structure was installed to provide flow control for stormwater from the King County Metro property and consists of a 60-inch by 30-inch slide gate that is manually operated by King County Metro. The slide gate appears to remain half open for most of the time according to the sign posted by the flow control structure. The channel width in the upstream reach of the project area ranges from 7 feet to 20 feet wide. The channel substrate is dominated by silt.

Downstream of the project area, the West Tributary flows southeast through the West Tributary Wetland, and water exits through a dam and a flow control structure located at the southeastern end of the wetland. The stream then flows south for approximately 350 feet and enters a culvert where it is conveyed below ground for approximately 1,300 feet until the channel opens up again in a wetland south of Bel-Red Road. Approximately 800 feet downstream of Bel-Red Road, Goff Creek enters the West Tributary. The West Tributary continues to flow south and eventually drains into Kelsey Creek at Kelsey Creek Farm Park.

One wetland (Wetland 1) is located within Zone 1A and 1B. Wetland 1 is a palustrine emergent, Category III wetland, approximately 0.10 acres in size. Wetland 1 is a narrow depressional wetland located adjacent to the Sound transit rail corridor (see Vicinity Map). The wetland likely sheet flows into a vegetated gravel ditch located at the toe of slope of the railroad tracks and flows into another wetland located approximately 120 feet north of Wetland 1 outside of the project area.

RP

Within Zone 2, three wetlands (Wetlands A, B/C, and West Tributary wetland) are located in the immediate vicinity of the project along 124th Avenue NE. Wetland A is a palustrine forested wetland, approximately 0.07 acres in size. Wetland A is a Category IV depressional wetland located west of 124th Avenue NE. Wetland B/C is a Category III riverine wetland located west of 124th Avenue NE along the banks of the West Tributary. Wetland B/C is a palustrine scrub-shrub wetland and is located in a depression where topography of the surrounding area slopes down to the wetland and the West Tributary.

The West Tributary Wetland is a riverine/depressional wetland associated with the West Tributary located east of 124th Avenue NE and north of NE 14th Street. This wetland is bounded by the King County Metro parking lot to the north, Mid-Mountain Equipment Yard and Evans Industrial Park to the east, and the former Safeway Bottling Plant parking lot to the south. The West Tributary Wetland is also referred as the West Tributary Regional Detention Pond which was constructed by the City of Bellevue in 1982 to treat runoff from industrial and commercial development as well as associated roads. The West Tributary Wetland is a Category II wetland and consists of a palustrine emergent community with a forested community along its edge.

(2) Will the project require any work over, in, or adjacent to (within 200 feet) the described waters? If yes, please describe and attach available plans.

Construction of the proposed project will not result in direct effects to Wetland 1. There are no permanent or temporary wetland impacts anticipated to occur as a result of the project. The new bridge constructed for the project will be directly above Wetland 1, but no loss of function is anticipated. According to the WSDOT Wetland Vegetation Response to Shade Special Study (2009), bridge heights over 24 feet have relatively minor impacts on vegetation in terms of total cover. The proposed bridge is approximately 35 feet, which is well above the bridge height with minimum vegetation impact. Based on the proposed bridge height, the project is expected to have no shading impact.

Project construction is expected to have permanent and temporary impacts to vegetated buffers of Wetland 1. Permanent buffer impacts include clearing buffer vegetation and permanent filling of these areas from the construction of the new road. These activities will affect approximately 0.06 acre of wetland buffers. The affected buffer areas are primarily dominated by Himalayan blackberry. Revegetating the affected area with native woody vegetation will result in a long-term increase in plant species diversity and general habitat support to their adjoining wetlands.

(3) Estimate the amount of fill and dredge material that would be placed in or removed from surface water or wetlands and indicate the area of the site that would be affected. Indicate the source of fill material.

No fill or dredge material will be placed in or removed from Wetland 1.

(4) Will the proposal require surface water withdrawals or diversions? Give general description, purpose, and approximate quantities if known.

The proposed project will not require surface water withdrawals or diversions from Wetland 1.

(5) Does the proposal lie within a 100-year floodplain? If so, note location on the site plan.

The proposed project does not lie within the 100-year floodplain.

(6) Does the proposal involve any discharges of waste materials to surface waters? If so, describe the type of waste and anticipated volume of discharge.

The proposed project will not discharge waste materials to any surface waters.

b. Ground

RP

(1) Will ground water be withdrawn, or will water be discharged to ground water? Give general description.

No groundwater will be withdrawn and no water will be discharged to groundwater as part of this proposal. It is not expected that we will hit groundwater during installation of the bridge piers. However, in case groundwater is present due to fluctuating levels and seasonal conditions, the project will utilize cofferdams and dewatering pumps to dry the area around the abutment construction. The withdrawn water will be discharged through TESC measures outlined in the plans and put back into the TDA system that it is from.

(2) Describe waste material that will be discharged into the ground from septic tanks or other sources, if any (for example: Domestic sewage; industrial, containing the following chemicals; agricultural; etc.) Describe the general size of the system, the number of such systems, the number of houses to be served (if applicable), or the number of animals or humans the system(s) are expected to serve.

No waste material will be discharged into the ground as part of the proposed project.

c. Water Runoff (Including storm water)

(1) Describe the source of runoff (including storm water) and method of collection and disposal, if any (include quantities, if known). Where will this water flow? Will this water flow into other waters? If so, describe.

The major source of runoff within the proposed project area is stormwater. This runoff is collected within five separate Threshold Discharge Areas (TDAs), numbered 1 (at the western end of the corridor) through 5 (at the eastern end of the corridor). Stormwater runoff within TDAs 1 and 2 is collected via catch basins and inlets and then conveyed to a water quality BMP for treatment. After passing through this BMP runoff within TDAs 1 and 2 will be discharged to a ditch that eventually terminates in Sturtevant Creek. Runoff within TDA 3 is collected via catch basins and inlets and conveyed to a modular wet vault and water quality BMP train, then discharged to a ditch eventually terminating in the West Tributary. Runoff within TDA 4 will be collected via bioretention cells and catch basins, and then conveyed to Lake Bellevue. Runoff within TDA 5 will be collected via catch basins and a compost amended biofiltration swale, then routed to a modular detention vault lying underneath 124th Avenue NE. Runoff within TDA 5 will be then discharged from the vault to West Tributary. All calculations have been completed and storm water capacity is adequate in these systems and documented in the project drainage report.

(2) Could waste materials enter ground or surface waters? If so, generally describe.

There is a possibility that minimal amounts of water materials could enter ground or surface waters (i.e., small amounts of petroleum products, sediments, or concrete materials) could occur from construction and operation activity. The probability of these releases is low. Oils, fuels, or chemicals will not be discharged to surface waters or onto land where there is a potential for reentry into surface waters. The contractor will be required to prepare a Spill Prevention Control and Countermeasures (SPCC) Plan for the project prior to beginning construction.

d. Proposed measures to reduce or control surface, ground, and runoff water impacts, if any:

Impervious surface area will be reduced after project construction. Existing impervious surface covers 6.89 acres of the project area. The proposed project will result in 5.96 acres of impervious surface. A Construction Stormwater Pollution Prevention Plan (CSWPPP) has been prepared and includes a Temporary Erosion and Sediment Control (TESC) Plan and a Spill Prevention and Countermeasures Control (SPCC) Plan for implementation on site.

RP

The permanent stormwater BMPs proposed for the project includes on-site stormwater management, flow control, and water quality treatment facilities.

4. Plants

a. Check or circle types of vegetation found on the site:

X deciduous tree (alder), maple, aspen, (other)

☐ evergreen tree: fir, cedar, pine, other

X shrubs

X grass

☐ pasture

☐ crop or grain

X wet soil plants: cattail, buttercup, bulrush, skunk cabbage, (other)

☐ water plants: water lily, eelgrass, milfoil, other

X other types of vegetation (Himalayan blackberry, Scott's broom)

b. What kind and amount of vegetation will be removed or altered?

Approximately 1.54 acres of vegetation will be cleared and grubbed from existing pervious surfaces for construction of the project

In addition, project construction is expected to have permanent and temporary impacts to vegetated buffers in Wetland 1.

Permanent buffer impacts:
Permanent buffer impacts include approximately 0.06 acre of Wetland 1 buffer area will be cleared for construction of the new road. The affected buffers are primarily dominated by Himalayan blackberry.

Temporary buffer impacts:
Project construction would also result in temporary impacts to a portion of the vegetated buffer of Wetland 1 as a result of clearing and constructing the temporary access road during construction. These activities would affect approximately 0.05 acres of the Wetland 1 buffer. The temporary removal of vegetation in portions of the wetland buffer would cause a minor and temporary decrease in general habitat support. Revegetating the affected area with native woody vegetation will result in a long-term increase in plant species diversity and general habitat support to their adjoining wetlands.

c. List threatened or endangered species known to be on or near the site.

There are no known threatened or endangered plant species known to be on or near the site.

d. Proposed landscaping, use of native plants, or other measures to preserve or enhance vegetation on the site, if any:

All vegetation temporarily disturbed by construction activities will be replaced with appropriate landscape plants after construction is complete. Bioretention cells will be planted with landscape plants to manage stormwater runoff.

Permanent and temporary impacts to wetland buffer vegetation will be mitigated consistent with the requirements

RP

of the City of Bellevue Land Use Code (LUC 20.25H.105) and appropriate federal and state regulations. For 0.06 acre of unavoidable impacts approximately 0.09 acre of degraded wetland buffer of Wetland 1 will be enhanced. Approximately 0.04 acre of the proposed buffer mitigation area will include removing invasive species such as Himalyan blackberry and re-vegetating with native woody vegetation. The remaining 0.05 acre of the proposed mitigation site would include understory planning and removal of English Ivy. The establishment of native woody vegetation in the degraded wetland buffer will increase buffer functions by slowing water flow, limiting erosion, and provides vegetative screening and wildlife cover for Wetland 1.

5. ANIMALS

a. Check or circle any birds and animals which have been observed on or near the site or are known to be on or near the site:

X Birds: hawk, heron, eagle, (songbirds,) other:

☐ Mammals: deer, bear, elk, beaver, other:

☐ Fish: bass, salmon, trout, herring, shellfish, other:

b. List any threatened or endangered species known to be on or near the site.

No threatened or endangered species are known to be on or near the site.

c. Is the site part of a migration route? If so, explain.

The project area lies within the Pacific Flyway, an avian migratory corridor consisting of western coastal areas of South, Central and North America.

d. Proposed measures to preserve or enhance wildlife, if any:

No measures are proposed to preserve or enhance wildlife.

6. Energy and Natural Resources

a. What kinds of energy (electric, natural gas, oil, wood stove, solar) will be used to meet the completed project's energy need? Describe whether it will be used for heating, manufacturing, etc.

An overall reduction of power use is anticipated with the removal of the office/industrial buildings; however the complete project will require energy use to power the traffic signals and street lighting.

b. Would your project affect the potential use of solar energy by adjacent properties? If so, generally describe.

The proposed project will not affect the potential use of solar energy by adjacent properties.

c. What kinds of energy conservation features are included in the plans of the proposal? List other proposed measures to reduce or control energy impacts, if any:

Energy conservation features include the use of LED lighting along the project corridor. The lighting has a narrower bandwidth and is expected to result in less disturbance to nearby wildlife. In addition, all lighting will be directed towards the roadway and pedestrian paths to limit light pollution in nearby critical areas.

7. Environmental Health

a. Are there any environmental health hazards, including exposure to toxic chemicals, risk of fire and explosion, spill, or hazardous waste that could occur as a result of this proposal? If so, describe.

RP

During construction, a spill of fuel or oils from equipment or machinery could potentially occur. Standard spill kits will be on site during construction and refueling and maintenance will not be permitted in wetlands or buffers. Prior to demolition of the buildings, tests for asbestos, lead, and other potentially hazardous building materials will be assessed so proper disposal arrangements can be made.

(1) Describe special emergency services that might be required.

No special emergency services are anticipated.

(2) Proposed measures to reduce or control environmental health hazards, if any.

A Phase 1 Environmental Site Assessment was prepared as part of the NEPA review and approval process. A Construction Stormwater Pollution Prevention Plan (CSWPPP) has been prepared and includes a Temporary Erosion and Sediment Control (TESC) Plan and a Spill Prevention and Countermeasures Control (SPCC) Plan for implementation on site. Overnight parking of vehicles and construction equipment may take place in the upland portion of the project to minimize possible spills of fuels and oils in Wetland 1. Refueling and maintenance will not be permitted in the wetland or buffer.

b. Noise

(1) What types of noise exist in the area which may affect your project (for example, traffic, equipment, operation, other)?

Traffic noise on NE 12th Street is the dominant source of noise within the project limits.

(2) What types and levels of noise would be created by or associated with the project on a short-term or long-term basis (for example, traffic, construction, operation, other)? Indicate what hours noise would come from the site.

Construction of the project can be expected to cause short-term noise impacts in areas directly adjacent to construction activity during core business hours. No long-term noise impacts have been identified as a result of vehicle traffic associated with the proposed project.

(3) Proposed measures to reduce or control noise impacts, if any:

Equipment will be operated during the core business hours and night time work is not anticipated. Other construction noise reduction measures will be implemented by the contractor.

8. Land and Shoreline Use

a. What is the current use of the site and adjacent properties?

The proposed project is located in the Bel-Red Subarea which historically included light industrial and service uses (City of Bellevue Comp Plan 1993). The area is currently characterized by sprawling warehouses with large surface parking lots. No residential neighborhoods or parks exist within the project area. The current use within the proposed project area includes commercial office and industrial businesses, and the Sound Transit rail corridor which runs north to south. NE Spring Boulevard will be elevated above the Eastside Rail Corridor (Zone 1B).

b. Has the site been used for agriculture? If so, describe.

The project site has not been used for agriculture most likely since the 1950's. Safeway purchased much of the land in the project area and began to develop it in the early 1950's (Tierra Right of Way 2015).

RP

c. Describe any structures on the site.

Three commercial office/industrial structures are located on site, one in each of the three zones.

- The Delta International Tech Industries building (Parcel # 282505-9207) located in Zone 1A where NE Spring Boulevard ties into NE 12th Street.
- The Teledesic buildings (Parcel # 1099100005) located in Zone 1B.
- The former Safeway distribution warehouse (Parcel # 0671000000) located between 120th Avenue NE and 124th Avenue NE in Zone 2

d. Will any structures be demolished? If so, what?

One structure will be demolished as part of the proposed project, the Delta International Tech Industries building. Sound Transit will demolish the other two structures on the project site (the Teledesic buildings and the former Safeway distribution warehouse) as part of the East Link Light Rail project.

e. What is the current zoning classification of the site?

For Zone 1, the existing generalized zoning of the project area includes Medical Office, Medical Institution and Office. For Zone 2, the existing generalized zoning of the project area is Office. (City of Bellevue Zoning Map 2009)

f. What is the current comprehensive plan designation of the site?

The project site consists of the following zoning classifications (City of Bellevue, Comprehensive Land Use Plan Map 2015):

Zone 1

- MI: Medical institution
- BR-OR-2: Bel Red-Office Residential –Node 2
- BR-MO: Bel Red-Medical office

Zone 2

- BR-OR-1: Bel Red-Office Residential –Node 1

g. If applicable, what is the current shoreline master program designation of the site?

Not applicable. The project site is not designated as a shoreline.

h. Has any part of the site been classified as an "environmentally sensitive" area? If so, specify.

Wetland 1 is considered an "environmentally sensitive" area. Refer to section 3.a.1 above for more information.

I. Approximately how many people would reside or work in the completed project?

Not applicable. The proposed project is a road project.

j. Approximately how many people would the completed project displace?

The completed project will require the relocation of several businesses operating in the Delta building. Relocation will be in accordance with the federal requirements for displacement of the businesses and their employees.

k. Proposed measures to avoid or reduce displacement impacts, if any:

Not applicable. No measures are proposed to avoid or reduce displacement impacts because no displacements

RP

will occur as part of the proposed project.

i. Proposed measures to ensure the proposal is compatible with existing and projected land uses and plans, if any:

The proposed project is part of a larger system of planned improvements for the area. The proposed project will require coordination with the Sound Transit East Link Light Rail Project, Spring District Development proposed by Wright Rustad, the City of Bellevue Transportation Division Improvement projects for the 120th Avenue Corridor and the 124th NE Improvement project.

9. Housing

a. Approximately how many units would be provided, if any? Indicate whether high, middle, or low-income housing.

Not applicable. No housing units will be provided as part of the proposed project.

b. Approximately how many units, if any, would be eliminated? Indicate whether high, middle, or low-income housing.

Not applicable. No housing units will be eliminated as part of the proposed project.

c. Proposed measures to reduce or control housing impacts, if any:

Not applicable. Housing impacts are not anticipated as part of the project.

10. Aesthetics

a. What is the tallest height of any proposed structure(s), not including antennas; what is the principal exterior building material(s) proposed?

The tallest proposed structures for the project include two bridge structures located in Zone 1B. The bridges will be constructed of concrete and will be no more than 55 feet above the existing ground level including throw fencing.

b. What views in the immediate vicinity would be altered or obstructed?

No views in the immediate vicinity will be altered or obstructed.

c. Proposed measures to reduce or control aesthetic impacts, if any:

The project includes many design features and aesthetic treatments as required by the Bel-Red Urban Design standards.

11. Light and Glare

a. What type of light or glare will the proposal produce? What time of day would it mainly occur?

Street lights will cast light onto the roadway and sidewalks for nightime safety.

RP

b. Could light or glare from the finished project be a safety hazard or interfere with views?

The project will use LED light fixtures that direct light down onto the roadway and sidewalks. Light or glare is not expected to be a safety hazard or interfere with views.

c. What existing off-site sources of light or glare may affect your proposal?

No existing off-site sources of light or glare will affect the proposed project.

d. Proposed measures to reduce or control light or glare impacts, if any:

The project includes LED lighting fixtures that direct a more intense light downward to improve safety for pedestrians and drivers but not cast light that would interfere with views or affect adjacent land uses.

12. Recreation

a. What designated and informal recreational opportunities are in the immediate vicinity?

The Wilburton Hill Community Park is located approximately one mile south of the proposed project. Wilburton Park is the largest upland park in the city with a wide variety of active and passive recreational activities. There are multiple bike routes located along NE 12th Street and 124th Avenue NE within the project vicinity. There are additional park and recreational features planned in the vicinity of the proposed roadway project as part of the overall Spring District Master Plan that will be developed by the City or adjacent private developers over time.

b. Would the proposed project displace any existing recreational uses? If so, describe.

The proposed project will not displace any existing recreational uses.

c. Proposed measures to reduce or control impacts on recreation, including recreation opportunities to be provided by the project or applicant, if any:

The proposed project will create recreation opportunities including a new multipurpose pathway consistent with Bel-Red Corridor Street and Urban Design standards.

13. Historic and Cultural Preservation

a. Are there any places or objects listed on, or proposed for, national, state, or local preservation registers known to be on or next to the site? If so, generally describe.

There are no places or objects listed on, or proposed for national, state or local preservation registers known to be on or next to the site. See the Cultural Resources Assessment (Tierra Right of Way 2015) for more details.

b. Generally describe any landmarks or evidence of historic, archeological, scientific, or cultural importance known to be on or next to the site.

No landmarks or evidence of historic, archeological, scientific or cultural importance is known to be on or next to the site.

c. Proposed measures to reduce or control impacts, if any:

No measures are proposed.

14. Transportation

RP

a. Identify public streets and highways serving the site, and describe proposed access to the existing street system. Show on site plans, if any.

NE 12th Street, 124th Avenue NE and 120th Avenue NE are public streets that serve the project site to the west and east respectively. In addition, I-405 is located approximately 600 feet west of the project site. State route 520 is located approximately 0.6 miles north of the project site.

b. Is site currently served by public transit? If not, what is the approximate distance to the nearest transit stop?

King County metro's bus route 226 serves a small portion of the project area along NE 12th Street for approximately 0.2 miles. Route 226 stops at NE 12th Street and 120th Avenue NE and 116th Avenue NE and NE 12th Street near the project area. It is anticipated that additional transit routes by King County and Sound Transit will be added to this area as development occurs. Transit-oriented development around the 120th Avenue NE light rail station will encourage use of public transit and increase the need for additional service.

c. How many parking spaces would the completed project have? How many would the project eliminate?

The proposed project will create 16 new public parking spaces and eliminate 66 existing private parking spaces.

d. Will the proposal require any new roads or streets, or improvements to existing roads or streets, not including driveways? If so, generally describe (indicate whether public or private).

The proposed project is a new five-lane roadway on NE Spring Boulevard.

e. Will the project use (or occur in the immediate vicinity of) water, rail, or air transportation? If so, generally describe.

The proposed project will not use water, rail or air transportation. The project will be constructed in the vicinity of Sound Transit's East Link light rail project.

f. How many vehicular trips per day would be generated by the completed project? If known, indicate when peak volumes would occur.

The proposed project will generate an average of 38,600 vehicular trips in Zone 1 and 17,500 vehicular trips in Zone 2 in the year 2035. Peak volumes will occur between 5:00pm and 6:00pm.

g. Proposed measures to reduce or control transportation impacts, if any:

Pedestrian safety enhancements, urban landscaping, sidewalks and a multipurpose pathway will be implemented to reduce or control transportation impacts for the proposed project.

15. Public Services

a. Would the project result in an increased need for the public services (for example: fire protection, police protection, health care, schools, other)? If so, generally describe.

The proposed project will not result in an increased need for public services.

b. Proposed measures to reduce or control direct impacts on public services, if any.

RP

Not applicable. An increased need for public services will not occur as a result of the proposed project therefore no measures are proposed to reduce or control impacts.

16. Utilities

a. Circle utilities currently available at the site: electricity, natural gas, water, refuse service, telephone, sanitary sewer, septic system, other.

b. Describe the utilities that are proposed for the project, the utility providing the service, and the general construction activities on the site or in the immediate vicinity which might be needed.

See table below for proposed utilities. The general construction activities on-site required for the utilities include: trenching, shoring, installation of utilities, backfilling and paving.

From NE Spring Blvd Roadway Improvements (Zone 1)

UT1 (Begin to Sta. F 54+00)	
Existing	**Proposed**
Water meter	
Storm drain	Storm drain (COB)
Gas	Gas main and service (PSE)
Fiber optic	
Sanitary sewer	
Water line	Water main (COB)
Overhead telephone	
Overhead television	
Overhead electric	
Underground telephone	
Underground electric	Underground electric (PSE)

From "NE Spring Blvd Roadway Improvements (Zone 2)"

UT1 (Begin to End)	
Existing	**Proposed**
Water meter	PSE vault
Storm drain	CenturyLink vault
Gas	Comcast vault
Fiber optic	Spring District vault
Sanitary sewer	Storm drain (COB)
Water line	Water main (COB)
Overhead telephone	Underground electric (PSE)
Overhead television	Underground telephone (CenturyLink)
Overhead electric	Underground television (Comcast)
Underground telephone	Gas main (PSE)
Underground electric	Sewer main (COB)
	Fiber optic (CenturyLink)

RP

Signature

The above answers are true and complete to the best of my knowledge. I understand that the lead agency is relying on them to make its decision.

Signature.....

Date Submitted.....12/21/15

RP

90% SUBMITTAL NOT FOR CONSTRUCTION

CITY OF BELLEVUE
TRANSPORTATION DEPARTMENT

NE SPRING BLVD
ROADWAY IMPROVEMENTS
(ZONE 1B)

SCHEDULE OF DRAWINGS

SHT NAME	TITLE
COV	COVER SHEET, VICINITY MAP & INDEX
LG1–LG2	LEGEND, ABBREVIATIONS, AND GENERAL NOTES
RS1–RS2	ROADWAY TYPICAL SECTIONS
STG1	STAGING AND TRAFFIC CONTROL LEGEND & NOTES
STC1–STC2	STAGING AND TRAFFIC CONTROL PLANS
SP1–SP4	SITE PREPARATION PLANS
AL1–AL3	ALIGNMENT PLAN & PROFILES
PV1–PV3	PAVING PLANS
PVD1–PVD4	PAVING DETAILS
IG1	INTERSECTION GRADING PLANS
EC1–EC3	TESC PLANS
DR1–DR3	DRAINAGE PLANS
DRP1–DRP2	DRAINAGE PROFILES
DT1–DT6	DRAINAGE DETAILS
WM1–WM5	WATER MAIN PLAN & PROFILES
WMD1	WATER MAIN DETAILS
IR1–IR3	IRRIGATION PLANS
IRD1–IRD2	IRRIGATION DETAILS
LS1–LS4	LANDSCAPE & URBAN DESIGN PLANS
LSD1–LSD9	LANDSCAPE DETAILS
WPN1	RETAINING WALL NOTES AND KEY PLAN
WP1–WP5	RETAINING WALL PLANS
WD1–WD7	RETAINING WALL DETAILS
CH1–CH4	CHANNELIZATION PLANS
ILG1	ILLUMINATION & SIGNING LEGEND/NOTES
ILS1–ILS3	ILLUMINATION & SIGNING PLANS
TS1–TS3	TRAFFIC SIGNAL PLANS, WIRING DIAGRAMS & POLE SCHEDULES
PL01	PRELOAD PLAN
BRW1–BRW44	WEST BRIDGE PLANS & DETAILS–(BRW10,22–27,&32–33)
BRE1–BRE42	EAST BRIDGE PLANS & DETAILS–(BRE10,22–27,&32–33)

SECTION 28, T. 25 N., R5E., W.M.
KING COUNTY

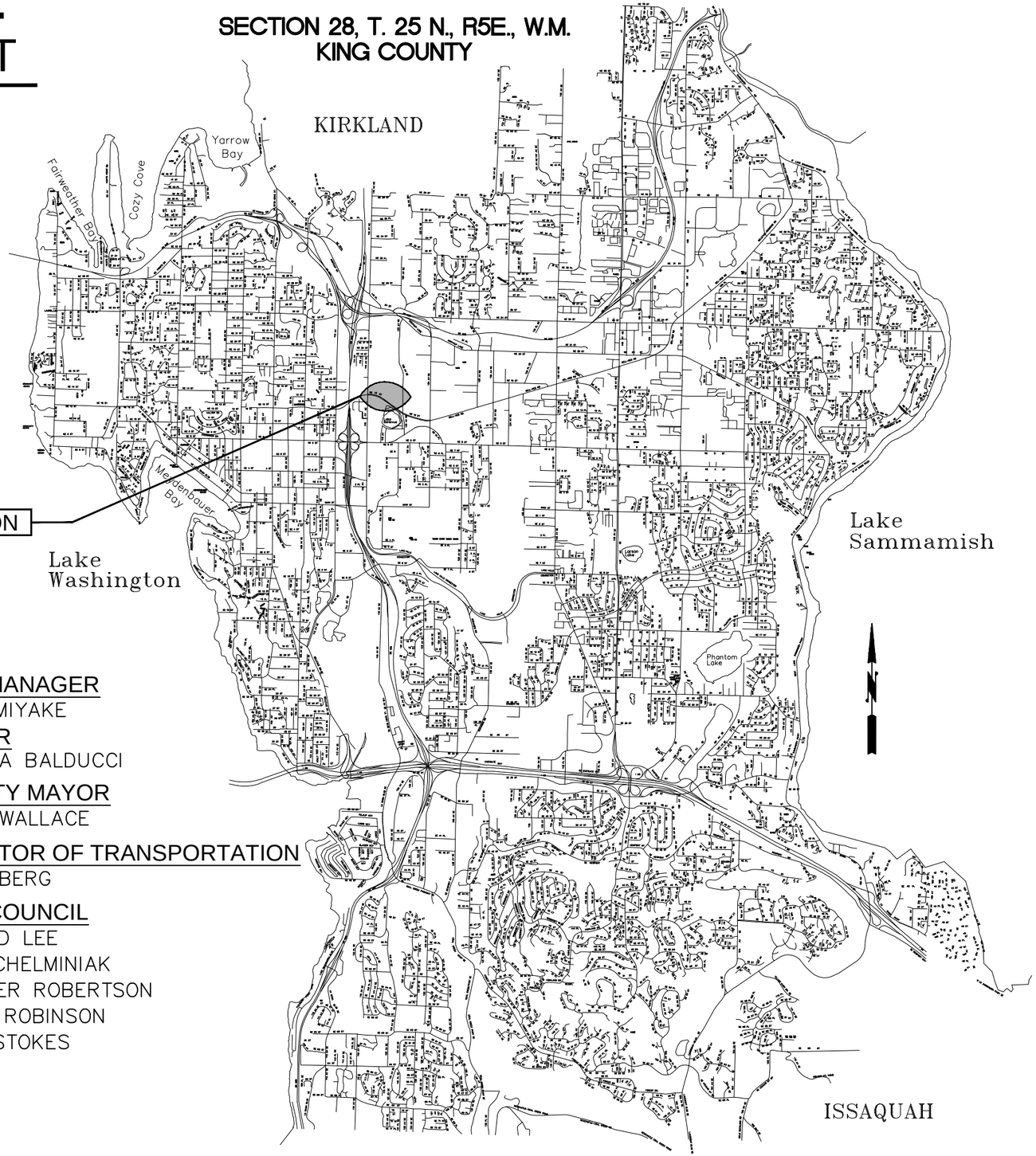

CITY MANAGER
BRAD MIYAKE

MAYOR
CLAUDIA BALDUCCI

DEPUTY MAYOR
KEVIN WALLACE

DIRECTOR OF TRANSPORTATION
DAVID BERG

CITY COUNCIL
CONRAD LEE
JOHN CHELMINIAK
JENNIFER ROBERTSON
LYNNE ROBINSON
JOHN STOKES

C.I.P. NO. PW-R-172
FEDERAL AID NO. XXXX
BID NO. XXXX

90% SUBMITTAL NOT FOR CONSTRUCTION

SURVEY AND CENTERLINE CONTROL

BASIS OF BEARINGS NAD83/NSR2007 HELD CITY OF BELLEVUE CONTROL POINT 2710

CONTROL POINT #	NAD83/NSR2007	PROJECT COORDINATES
2710	N: 230689.587 E: 1309567.900	N: 500,000 E: 500,000

DISTANCES SHOWN ON THESE PLANS ARE GROUND SCALE COMBINED FACTOR = 0.99996798

VERTICAL CONTROL
VERTICAL DATUM: NAVD88

CITY OF BELLEVUE BENCH MARK NO. 151 WEST SIDE OF 120TH AVE NE 150' NORTH OF VECA ELECTRIC 2023 120TH AVE NE STAMPED 151 TOP MIDDLE BOLT OF THREE ON EAST SIDE OF BASE FOR RR CROSSING SIGNAL POLE.

SURVEY LEGEND

		PROPOSED	EXISTING
ANGLE POINT	(AP)		
BENCH MARK	(BM)		
BLOCK CORNER	(BC)		
IRON PIPE	(IP)		
MONUMENT (IN CASE)	(MIC)		
MONUMENT (SURFACE)	(MON)		
OWNERSHIP TIE	(OT)		
SECTION DATA:			
SECTION CENTER			
SECTION CORNER			
QUARTER CORNER			
SIXTEENTH CORNER			
CLOSING CORNER			
MEANDER CORNER	(MC)	MC	MC
WITNESS CORNER	(WC)	WC	WC
SOIL BORING	(SB)		
SPOT ELEVATION	(SE)		
TAX LOT / PARCEL NUMBER			

ROADWAY CHANNELIZATION LEGEND

BIKE PATH

ONLY SYMBOL

STOP

LANE CONTROL ARROWS:

STRAIGHT ARROW

2-WAY LEFT TURN

LEFT TURN ARROW

RIGHT TURN ARROW

LEFT-STRAIGHT ARROW

RAISED MARKERS:

LANE MARKERS TYPE I

LANE MARKERS TYPE II

GAS / POWER / TELEPHONE LEGEND

GAS METER

GAS VALVE

PAD MOUNTED TRANSFORMER

POWER VAULT

TRANSMISSION TOWER

UTILITY POLE

UTILITY POLE ANCHOR

TELEPHONE RISER

TELEPHONE VAULT

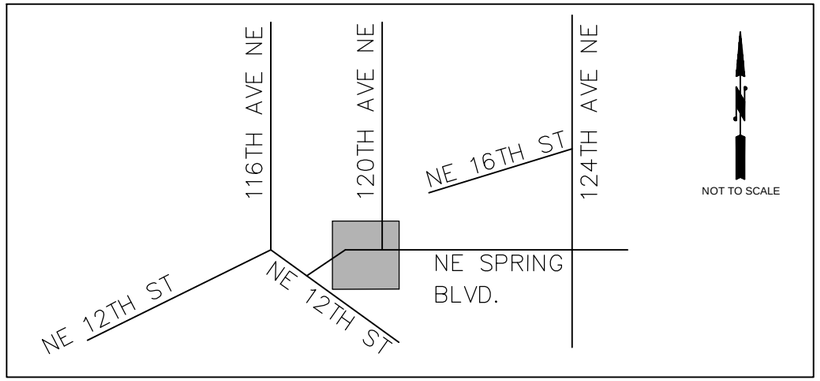

PROJECT VICINITY MAP

LANDSCAPING LEGEND

	PROPOSED	EXISTING
RIP RAP		
ROCKERY		
SHRUB		
SIGN		
TREE (Conifer)		
TREE (Deciduous)		
YARD LIGHT		

SANITARY / STORM / SEWER LEGEND

SAN. SEWER CLEAN OUT

SAN. SEWER MANHOLE

STORM DRAIN CATCH BASIN TYPE 1

STORM DRAIN CATCH BASIN TYPE 2

STORM DRAIN CULVERT

STORM DRAIN MANHOLE

SIGNALIZATION LEGEND

OPTICOM SENSOR

JUNCTION BOX (TYPE I, 2, 3)

PEDESTRIAN PUSHBUTTON POST W/ PUSHBUTTON

PEDESTRIAN SIGNAL HEAD

POLE NOTE

SIGNAL CONTROLLER

MICROWAVE DETECTION

SIGNAL LOAD CENTER:

SERVICE CABINET

STREET LIGHT ASSEMBLY

TRAFFIC SIGNS:

SINGLE POST

DOUBLE POST

TENON (FUTURE)

TRAFFIC SIGNAL POLE

EMERGENCY VEHICLE PREEMPTION

TRAFFIC SIGNAL POLE W/ LUMINARE

VEHICLE SIGNAL HEAD

VEHICLE SIGNAL HEAD W/ ARROW INDICATOR

WIRE NOTE

LOOP DETECTION

WATER SYMBOLS

	PROPOSED	EXISTING
ADAPTER, FL. x M.J.		
BENDS:		
90 DEGREE BEND, FL.		
45 DEGREE BEND, FL.		
22.5 DEGREE BEND, FL.		
11.25 DEGREE BEND, FL.		
90 DEGREE BEND, M.J.		
45 DEGREE BEND, M.J.		
22.5 DEGREE BEND, M.J.		
11.25 DEGREE BEND, M.J.		
VERTICAL BEND, FL.		
VERTICAL BEND, M.J.		
REDUCERS:		
REDUCER, FL.		
REDUCER, M.J.		
REDUCER, M.J. x FL.		
REDUCER, M.J. x P.E.		
REDUCER, P.E. x M.J./FL. x M.J.		
TEES:		
TAPPING TEE & VALVE, FL. x M.J.		
TEE, FL.		
TEE, M.J.		
TEE, M.J. x FL.		
VALVES:		
BUTTERFLY VALVE, FL.		
BUTTERFLY VALVE, FL. x M.J.		
BUTTERFLY VALVE, M.J.		
GATE VALVE, FL.		
GATE VALVE, FL. x M.J.		
GATE VALVE, M.J.		
AIR RELIEF VALVE (AIR)		
BLOW-OFF VALVE (BO)		
CHECK VALVE (CK)		
PLUG VALVE (PV)		
CAP/PLUG		
COUPLING (CPL)		
GUARD POST (GP)		
REDUCER (RED)		
THRUST BLOCK (TB)		
WATER METER (WM)		
FIRE HYDRANTS:		
2-PORT (FH)		
3-PORT (FH)		
JOINTS:		
FLANGE/BLIND FL (FL)/(BL FL)		
MECHANICAL (MJ)		
PUSH-ON/HUB		
THREAD (THD)		

PAUL A. FERRER, STATE OF WASHINGTON, 43172, REGISTERED PROFESSIONAL ENGINEER

NO.	DATE	BY	APPR.	REVISIONS

Approved By

TRANSPORTATION DESIGN MANAGER DATE
S. COSTA
PROJECT MANAGER DATE

S. HAYS DESIGNED BY DATE
J. FRYE DRAWN BY DATE
G. ROYCROFT CHECKED BY DATE

City of Bellevue
TRANSPORTATION DEPARTMENT

HDR

NE SPRING BLVD - ZONE 1B
90% DESIGN

LEGEND AND ABBREVIATIONS

SHEET NAME LG1

SHT 2 OF 184

90% SUBMITTAL NOT FOR CONSTRUCTION

LINETYPES

LINETYPES	PROPOSED	EXISTING
GAS LINE	G	G
FIBER OPTIC LINE	FO	FO
STORM DRAIN LINE	SD	SD
SANITARY SEWER LINE	SS	S S
WATER LINE	W	W
OVERHEAD FIBER OPTIC LINE	OHF	OHF
OVERHEAD TELEPHONE LINE	OHT	T T
OVERHEAD TELEVISION	OHTV	OHTV
OVERHEAD ELECTRIC	OHE	P P
POLYVINYL CHLORIDE LINE	PVC	PVC
SILT FENCE LINE	SF	SF
UNDERGROUND ELECTRIC LINE	UGE	UGE
UNDERGROUND TELEPHONE LINE	UGT	UGT
CUT LINE	CUT	
FILL LINE	FILL	
HIGH VISIBILITY FENCE	HVF	
FENCE	X X	X X
IRRIGATION LINE	IRR	IRR
WATTLE		
TREE LINE		
FLOW ARROW		
SAWCUT		
RIGHT-OF-WAY (LIMITED ACCESS)		
RIGHT-OF-WAY		
PROPERTY LINE		
EASEMENT (PERMANENT)		
EASEMENT (TEMPORARY)		
RETAINING WALL		
CONTOUR		
GUARDRAIL		
CONCRETE BARRIER		

ABBREVIATIONS

@ = AT
+/− = PLUS OR MINUS
ABUT. = ABUTMENT
A.P. = ANGLE POINT
ASPH. = ASPHALT
ASTM = AMERICAN STANDARD TEST METHOD
APS = ACCESSIBLE PEDESTRIAN SIGNAL
AVE. = AVENUE
BAT = BUSINESS ACCESS AND TRANSIT
BLDG. = BUILDING
BRG. = BRIDGE
BVC = BEGIN VERTICAL CURVE
CAL. = CALIPER* (SIZE OF TREE)
CALC = CALCULATED
CB = CATCH BASIN
CESCL = CERTIFIED EROSION AND SEDIMENT CONTROL LEAD
CDF = CONTROL DENSITY FILL
C.I.P. = CAST IN PLACE
CJ = CONCRETE JOINT
CL. = CLASS
CL = CENTERLINE
CLR. = CLEARANCE
CSBC = CRUSHED SURFACE BASE COURSE
CSTC = CRUSHED SURFACE TOP COURSE
CTR. = CENTER
C.O.B. = CITY OF BELLEVUE
CONC. = CONCRETE
CONT. = CONTINUE
C.Y. = CUBIC YARD
DIAM./DIA. = DIAMETER
DW = DRIVEWAY
DWG. = DRAWING
E = EAST
EB = EAST BOUND
e = SUPERELEVATION
EJ = EXPANSION JOINT
ELEV. = ELEVATION
ENT. = ENTRANCE
EOP = EDGE OF PAVEMENT
ESC. = EROSION AND SEDIMENT CONTROL
EST. = ESTIMATED
EVC. = END VERTICAL CURVE
FED. = FEDERAL
FT = FOOT
FTG. = FOOTING
FTB = FLUIDIZED THERMAL BACKFILL
FL = FLOWLINE / FLANGE
G = GRADE
GALV. = GALVANIZED
GIS = GEOGRAPHIC INFORMATION SYSTEMS
G.P.M. = GALLONS PER MINUTE
GL = GUTTER LINE
HMA = HOT MIX ASPHALT
H:V = HORIZONTAL TO VERTICAL
HUND = HUNDRED
HVF = HIGH VISIBILITY FENCE
IE = INVERT ELEVATION
I.D. = INSIDE DIAMETER
ID = IDENTIFICATION
IN. = INCH
INCL. = INCLUDING
ITS = INTELLIGENT TRANSPORTATION SYSTEM
KSI = KIPS PER SQUARE INCH
L = Length
LK. = LAKE
LBS. = POUNDS
L.F. = LINEAR FOOT
LOL = LAYOUT LINE
LRT = LIGHT RAIL TRAIN
L.S. = LUMP SUM
LT = LEFT
MAX. = MAXIMUM
MIN. = MINIMUM
M.P. = MILE POST
MPH = MILE PER HOUR
MOD = MODIFIED
MSE = MECHANICALLY STABILIZED EARTH
N = NORTH
NAVD = NORTH AMERICAN VERTICAL DATUM
NB = NORTH BOUND
NO. = NUMBER
N.T.S. = NOT TO SCALE
NST = NOT STEEPER THAN
O.C. = ON CENTER
P.C. = POINT OF CURVATURE
P.G.A. = PERMANENT GROUND ANCHOR
P.E. = PROFESSIONAL ENGINEER
PERF = PERFORATED
P.I. = POINT OF INTERSECTION
P.O.T. = POINT OF TANGENT
PL. = PLACE
PLN = PLAN
P.S.I. = POUNDS SQUARE INCH
P.T. = POINT OF TANGENCY
PC = POINT OF CURVATURE
PCC = PORTLAND CEMENT CONCRETE
PDFSM = PRECAST DUAL FACED SLOPED MOUNTABLE
PG = PERFORMANCE GRADE
POB = POINT OF BEGINNING
POC = POINT OF CURVE
POE = POINT OF ENDING
POT = POINT OF TANGENT
PROJ. = PROJECT
PRVC = POINT OF REVERSE VERTICAL CURVE
PS = POWER SOURCE
PSIPE = PLANT SELECTION INCLUDING PLANT ESTABLISHMENT
PVC = POLYVINYL CHLORIDE
PVMT. = PAVEMENT
R = RADIUS / RANGE
REINF. = REINFORCING
ROW = Right of Way
RT = RIGHT
S = SOUTH
SB = SOUTH BOUND
SCH. = SCHEDULE
SCL = SEATTLE CITY LIGHT
SE WALL/ SEW = STRUCTURAL EARTH WALL
S.F. = SQUARE FOOT
SHT. = SHEET
SPA. = SPACING
SPCC = SPILL PREVENTION, CONTROL AND COUNTERMEASURES
SPEC = SPECIFICATION
SR = STATE ROUTE
SQ. = SQUARE
STD. = STANDARD
STA. = STANDARD
SWPPP = STORMWATER POLLUTION PREVENTION PLAN
T = TANGENT LENGTH OF CURVE / TOWNSHIP
TESC = TEMPORARY EROSION AND SEDIMENT CONTROL
TPR = TRANSIT PRIORITY READER
TPRG = TRANSIT PRIORITY REQUEST GENERATOR
TSP = TRANSIT SIGNAL PRIORITY
TYP. = TYPICAL
U.N.O. = UNLESS NOTED OTHERWISE
VC = VERTICAL CURVE
V.A.P. = VERTICAL ANGLE POINT
VPI = VERTICAL POINT OF INTERSECTION
W = WEST
W/ = WITH
WB = WEST BOUND
WM = WATER MAIN
W.M. = WILLAMETTE MERIDIAN
WML−CB−XX = WATER MONITORING LOCATION−CATCH BASIN−##
WML−DT−XX = WATER MONITORING LOCATION−DITCH−##
WSDOT = WASHINGTON STATE DEPARTMENT OF TRANSPORTATION
WWM = WELDED WIRE MESH

PAUL A. FERRIER — STATE OF WASHINGTON — 43172 — REGISTERED PROFESSIONAL ENGINEER

NO.	DATE	BY	APPR.	REVISIONS

Approved By

TRANSPORTATION DESIGN MANAGER — DATE
S. COSTA
PROJECT MANAGER — DATE

S. HAYS — DESIGNED BY — DATE
J. FRYE — DRAWN BY — DATE
G. ROYCROFT — CHECKED BY — DATE

City of Bellevue
TRANSPORTATION DEPARTMENT

HDR

NE SPRING BLVD - ZONE 1B
90% DESIGN

LEGEND AND ABBREVIATIONS

SHEET NAME LG2

SHT 3 OF 184

90% SUBMITTAL NOT FOR CONSTRUCTION

GENERAL NOTES:

1. SEE LANDSCAPE DETAILS FOR SOIL PREPARATION CROSS SECTIONS.
2. SEE PAVING PLAN FOR VARIABLE WIDTHS.
3. ALL DIMENSIONS IN FEET UNLESS OTHERWISE SHOWN.
4. SEE LANDSCAPING & URBAN DESIGN PLANS AND DETAILS FOR MEDIAN AND AMENITY ZONE TREATMENTS.
5. FOR SIDEWALK TYPE AND LOCATION, MEDIAN ISLAND LOCATION, PAVING LIMITS, AND JOINTING PLANS SEE PAVING PLANS AND DETAILS.
6. GUTTER PAN SHALL MATCH ROADWAY SLOPE.
7. SEE RETAINING WALL PLANS FOR WALL LOCATIONS, PLANS, PROFILES AND DETAILS FOR WALL TYPES, SIZES, AND BACKFILL REQUIREMENTS.
8. SEE LANDSCAPE PLANS FOR PLANTER CROSS SECTION.
9. ROADWAY CROSS SLOPE VARIES. SEE SUPERELEVATION DIAGRAMS ON ROADWAY PROFILES. SEE ALIGNMENT PLANS FOR SUPERELEVATION PIVOT POINT TRANSITIONS AND PAVEMENT GRADE BREAKS. SEE FINISHED PAVEMENT GRADES ON INTERSECTION GRADING PLANS.
10. SEE BRIDGE PLANS FOR DIMENSIONS OF PEDESTRIAN BARRIER AND THROW SCREEN.
11. SEE BRIDGE PLANS FOR BRIDGE DECK, SIDEWALK, AND CURB DESIGN.
12. SEE ALIGNMENT PLAN & PROFILE FOR PIVOT POINT TRANSITIONS.
13. SEE LANDSCAPE DETAILS FOR PEDESTRIAN RAILING AND THROW FENCE DETAILS. FOR LIMITS OF PEDESTRIAN RAILING, PEDESTRIAN BARRIER, AND THROW FENCE, SEE RETAINING WALL PLANS.

LEGEND:

- CEMENT CONC. PAVEMENT
- CRUSHED SURFACING TOP COURSE
- GRAVEL BORROW INCL. HAUL
- CEMENT CONC. SIDEWALK / CURB
- GRAVEL BACKFILL FOR STRUCTURAL EARTH WALL

CONSTRUCTION NOTES:

1. CEMENT CONC. PAVEMENT
2. CRUSHED SURFACING TOP COURSE
3. GRAVEL BORROW INCL. HAUL
4. CEMENT CONC. SIDEWALK (COB STD. DWG. TE-11)
5. CEMENT CONCRETE TRAFFIC CURB AND GUTTER (COB STD. DWG. TE-10)
6. GRAVEL BACKFILL FOR STRUCTURAL EARTH WALL
7. SUBGRADE PREPARATION PER SECTION 2-06

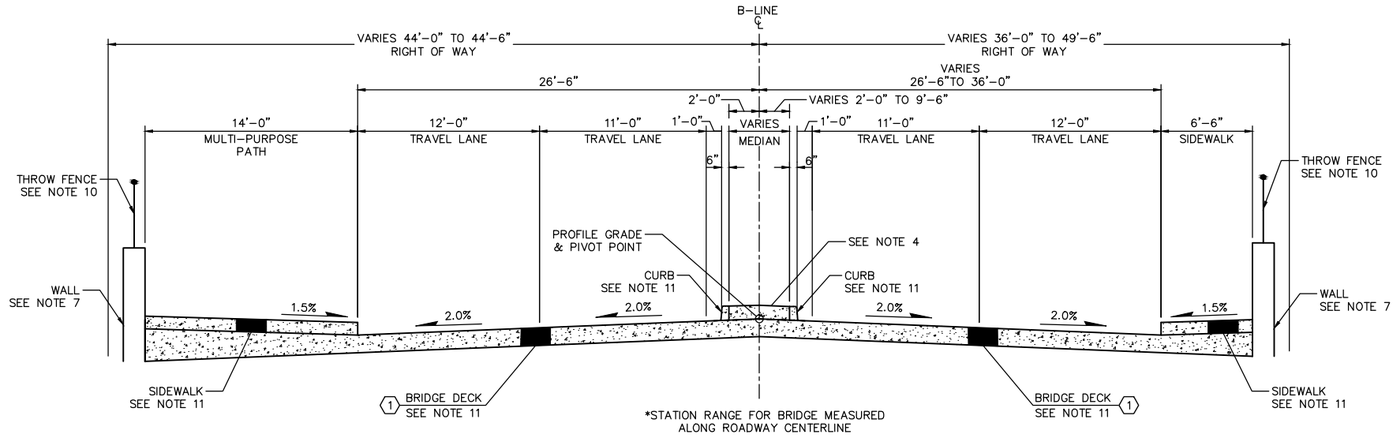

NE SPRING BLVD ROADWAY SECTION
NOT TO SCALE
STA. B 202+39 TO B 203+75
STA. B 205+30 TO B 206+97

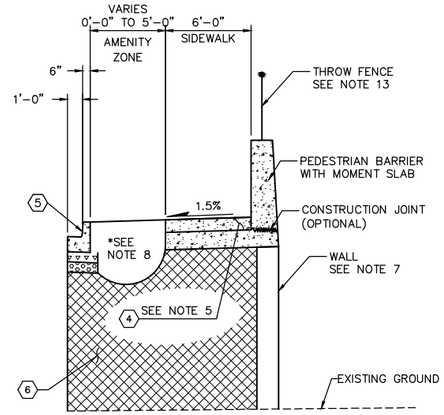

ALTERNATE SIDEWALK SECTION
NOT TO SCALE
STA. B 206+49 TO STA. B 206+78

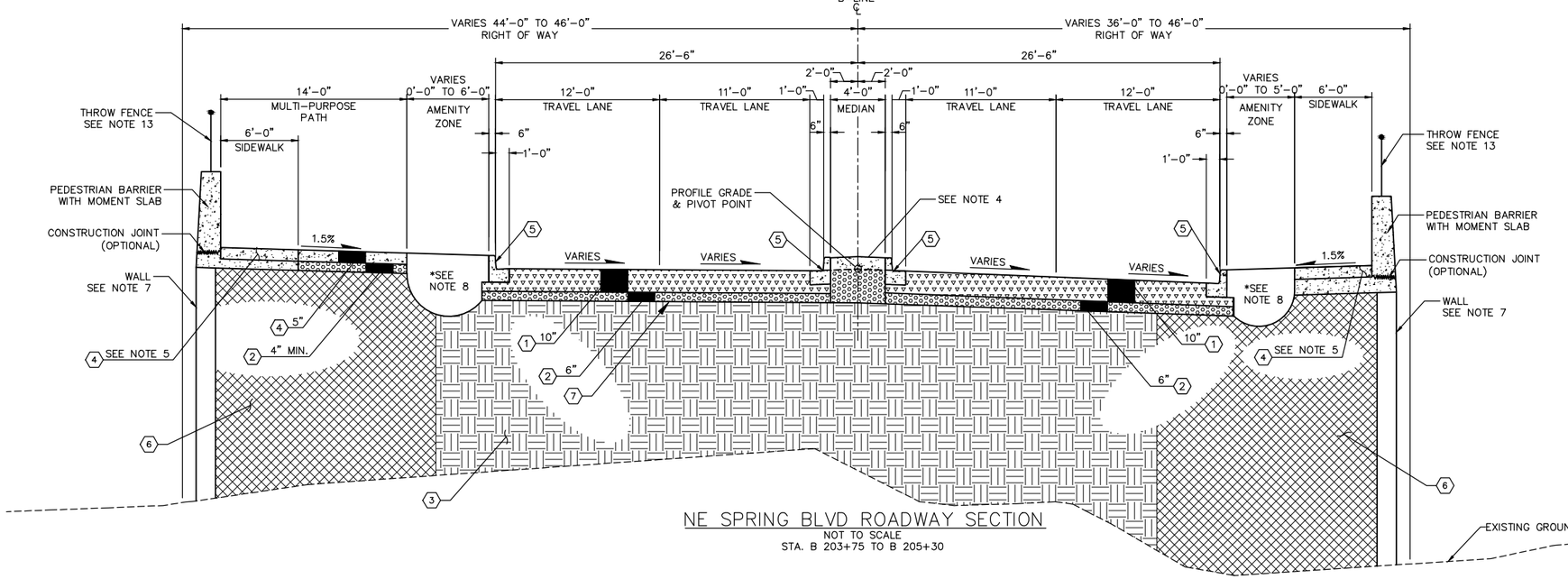

NE SPRING BLVD ROADWAY SECTION
NOT TO SCALE
STA. B 203+75 TO B 205+30

PAUL A. FERRIER
STATE OF WASHINGTON
43172
REGISTERED
PROFESSIONAL ENGINEER

NO.	DATE	BY	APPR.	REVISIONS

Approved By

TRANSPORTATION DESIGN MANAGER — DATE
S. COSTA
PROJECT MANAGER — DATE

P.TEAGUE — DESIGNED BY — DATE
J. FRYE — DRAWN BY — DATE
G. ROYCROFT — CHECKED BY — DATE

City of Bellevue
TRANSPORTATION DEPARTMENT

HDR

NE SPRING BLVD - ZONE 1B
90% DESIGN

ROADWAY TYPICAL SECTIONS

SHEET NAME RS1

SHT 4 OF 184

90% SUBMITTAL NOT FOR CONSTRUCTION

GENERAL NOTES:

1. SEE LANDSCAPE DETAILS FOR SOIL PREPARATION CROSS SECTIONS.
2. SEE PAVING PLAN FOR VARIABLE WIDTHS.
3. ALL DIMENSIONS IN FEET UNLESS OTHERWISE SHOWN.
4. SEE LANDSCAPING & URBAN DESIGN PLANS AND DETAILS FOR MEDIAN AND AMENITY ZONE TREATMENTS.
5. FOR SIDEWALK TYPE AND LOCATION, MEDIAN ISLAND LOCATION, PAVING LIMITS, AND JOINTING PLANS SEE PAVING PLANS AND DETAILS.
6. GUTTER PAN SHALL MATCH ROADWAY SLOPE.
7. SEE RETAINING WALL PLANS FOR WALL LOCATIONS, PLANS, PROFILES AND DETAILS FOR WALL TYPES, SIZES, AND BACKFILL REQUIREMENTS.
8. SEE LANDSCAPE PLANS FOR PLANTER CROSS SECTION.
9. ROADWAY CROSS SLOPE VARIES. SEE SUPERELEVATION DIAGRAMS ON ROADWAY PROFILES. SEE ALIGNMENT PLANS FOR SUPERELEVATION PIVOT POINT TRANSITIONS AND PAVEMENT GRADE BREAKS. SEE FINISHED PAVEMENT GRADES ON INTERSECTION GRADING PLANS.
10. SEE BRIDGE PLANS FOR DIMENSIONS OF PEDESTRIAN BARRIER AND THROW SCREEN.
11. SEE BRIDGE PLANS FOR BRIDGE DECK, SIDEWALK, AND CURB DESIGN.
12. SEE ALIGNMENT PLAN & PROFILE FOR PIVOT POINT TRANSITIONS.
13. SEE LANDSCAPE DETAILS FOR PEDESTRIAN RAILING AND THROW FENCE DETAILS. FOR LIMITS OF PEDESTRIAN RAILING, PEDESTRIAN BARRIER, AND THROW FENCE, SEE RETAINING WALL PLANS.

LEGEND:

- CEMENT CONC. PAVEMENT
- CRUSHED SURFACING TOP COURSE
- GRAVEL BORROW INCL. HAUL
- CEMENT CONC. SIDEWALK / CURB
- GRAVEL BACKFILL FOR STRUCTURAL EARTH WALL

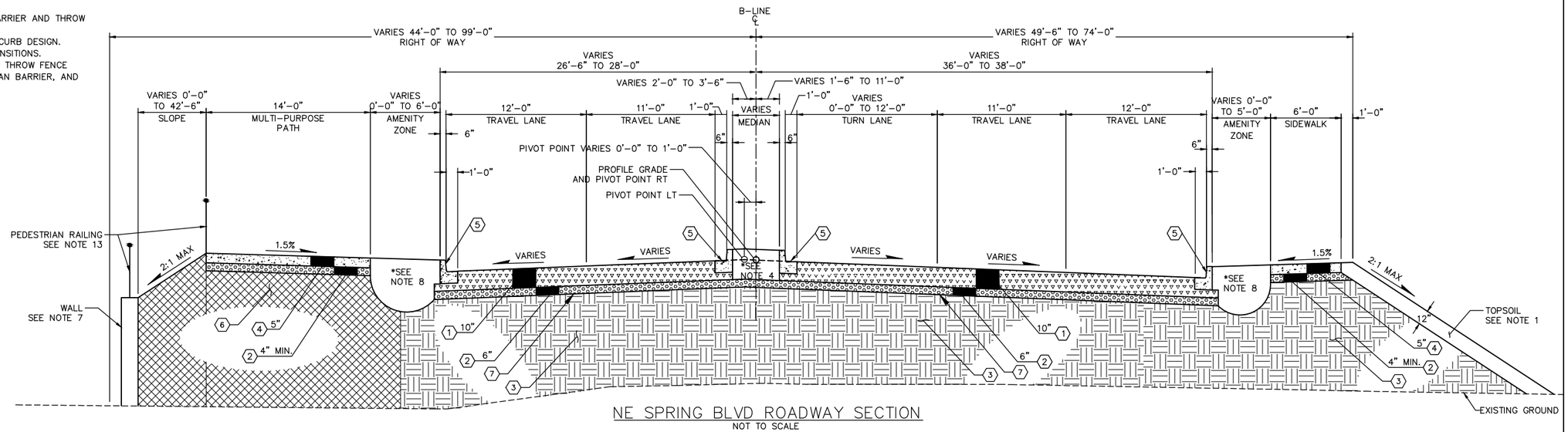

NE SPRING BLVD ROADWAY SECTION

NOT TO SCALE
STA. B 206+97 TO B 210+26

CONSTRUCTION NOTES:

1. CEMENT CONC. PAVEMENT
2. CRUSHED SURFACING TOP COURSE
3. GRAVEL BORROW INCL. HAUL
4. CEMENT CONC. SIDEWALK (COB STD. DWG. TE–11)
5. CEMENT CONCRETE TRAFFIC CURB AND GUTTER (COB STD. DWG. TE–10)
6. GRAVEL BACKFILL FOR STRUCTURAL EARTH WALL
7. SUBGRADE PREPARATION PER SECTION 2–06

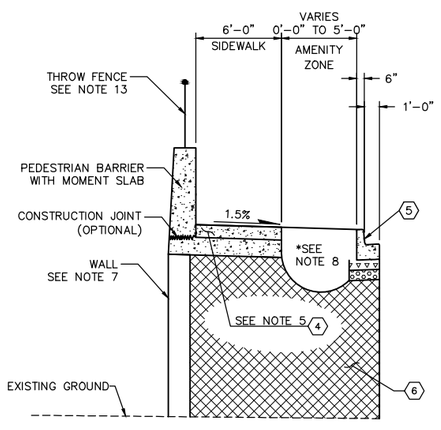

ALTERNATE SIDEWALK SECTION

NOT TO SCALE
STA. B 207+47 TO STA. B 208+32

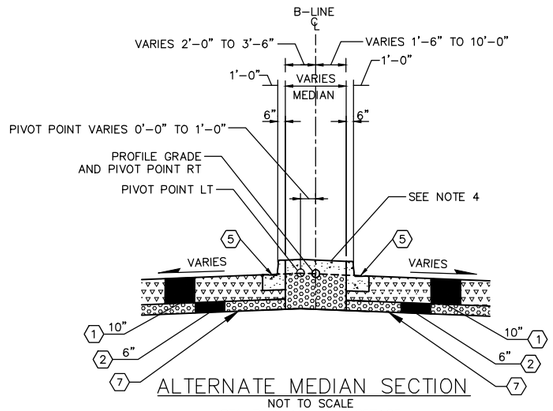

ALTERNATE MEDIAN SECTION

NOT TO SCALE
STA. B 206+97 TO B 207+03
STA. B 209+91 TO B 209+97

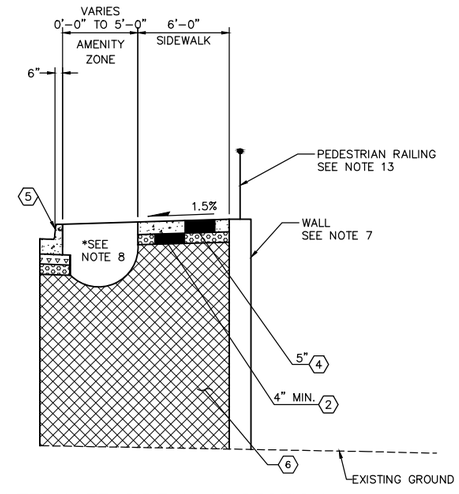

ALTERNATE SIDEWALK SECTION

NOT TO SCALE
STA. B 206+78 TO STA. B 207+30

PAUL A. FERRER
STATE OF WASHINGTON
43172
REGISTERED
PROFESSIONAL ENGINEER

NO.	DATE	BY	APPR.	REVISIONS

Approved By

TRANSPORTATION DESIGN MANAGER — DATE
S. COSTA
PROJECT MANAGER — DATE

P.TEAGUE	
DESIGNED BY	DATE
J. FRYE	
DRAWN BY	DATE
G. ROYCROFT	
CHECKED BY	DATE

City of Bellevue
TRANSPORTATION DEPARTMENT

HDR

NE SPRING BLVD - ZONE 1B
90% DESIGN

ROADWAY TYPICAL SECTIONS

SHEET NAME **RS2**

SHT 5 OF 184

90% SUBMITTAL NOT FOR CONSTRUCTION

GENERAL NOTES:

1. A PROTECTIVE VEHICLE IS RECOMMENDED REGARDLESS IF A TRUCK MOUNTED ATTENUATOR (TMA) IS AVAILABLE; A WORK VEHICLE MAY BE USED. WHEN NO TMA IS USED, THE PROTECTIVE VEHICLE SHALL BE STRATEGICALLY LOCATED TO SHIELD WORKERS, WITH MINIMUM REQUIRED ROLL-AHEAD DISTANCE.
2. DEVICES SHALL NOT ENCROACH INTO ADJACENT LANES.
3. FOR SIGNS REFER TO MANUAL ON UNIFORM TRAFFIC CONTROL DEVICES (MUTCD) AND WSDOT SIGN FABRICATION MANUAL M55-05.
4. ALL ADDITIONAL TRAFFIC CONTROL FOR THE PROJECT WHICH INCLUDES, BUT IS NOT LIMITED TO, LANE CLOSURES, FLAGGING OPERATIONS, INTERSECTION CLOSURES, DETOUR PLANS, LANE SHIFTS, AND SHOULDER CLOSURES, SHALL BE SUBMITTED TO THE CITY AND THE ENGINEER FOR APPROVAL 5 DAYS IN ADVANCE OF IMPLEMENTATION.
5. PCMS LOCATIONS ARE APPROXIMATE AND MAY BE ADJUSTED.
6. CONFLICTING PAVEMENT MARKINGS NO LONGER APPLICABLE MUST BE REMOVED OR OBLITERATED AS SOON AS POSSIBLE.
7. STEADY BURN WARNING LIGHTS (TYPE C, MUTCD) SHOULD BE USED ON CHANNELIZING DEVICES AT NIGHT FOR DELINEATION.
8. CONTRACTORS SHALL MAINTAIN DRIVEWAY ACCESS TO ADJACENT PROPERTY OWNERS THROUGH THE DURATION OF THE PROJECT. THE MINIMUM DRIVEWAY WIDTH SHALL BE 10' WHERE TRAFFIC MUST ENTER AND EXIT AT DESIGNATED DRIVEWAYS FOR BUSINESS ACCESS, SUCH AS DRIVE THRU'S. THE CONTRACTOR SHALL KEEP ALL DRIVEWAYS OPEN TO TRAFFIC.

LONGITUDINAL BUFFER SPACE = B								
POSTED SPEED (MPH)	25	30	35	40	45	50	55	60
LENGTH (FT)	155	200	250	305	360	425	495	570

MINIMUM TAPER LENGTH=L (FEET)								
LANE WIDTH (FEET)	POSTED SPEED (MPH)							
	25	30	35	40	45	50	55	60
10	105	150	205	270	450	500	550	–
11	115	165	225	294	495	550	605	660
12	125	180	245	320	540	600	660	720

CHANNELIZING DEVICE SPACING		
POSTED SPEED (MPH)	IN TAPER (FEET)	IN TANGENT (FEET)
50 / 60	40	80
35 / 45	30	60
25 / 30	20	40

SIGN SPACING = X **(1)**		
RURAL HIGHWAYS	60 / 65 MPH	800' ±
RURAL ROADS	45 / 55 MPH	500' ±
RURAL ROADS & URBAN ARTERIALS	35 / 40 MPH	350' ±
RURAL ROADS, URBAN ARTERIALS, RESIDENTIAL & BUSINESS DISTRICTS	25 / 30 MPH	200' ± (2)
URBAN STREETS	25 MPH OR LESS	100' ± (2)
ALL SIGNS ARE BLACK ON ORANGE UNLESS DESIGNATED OTHERWISE		

(1) ALL SIGN SPACING MAY BE ADJUSTED TO ACCOMMODATE INTERCHANGE RAMPS, AT-GRADE INTERSECTIONS, DRIVEWAYS.

(2) THIS SIGN SPACING MAY BE REDUCED IN URBAN AREAS TO FIT ROADWAY CONDITIONS.

BUFFER DATA	
TYPICAL PROTECTIVE VEHICLE WITH TMA (SEE NOTE 1)	
VEHICLE TYPE	LOADED WEIGHT
4 YARD DUMP TRUCK, SERVICE TRUCK, FLAT BED, ETC.	MINIMUM WEIGHT 15,000 LBS. (MAXIMUM WEIGHT SHALL BE IN ACCORDANCE WITH MANU-FACTURER RECOMMENDATION)
◇1 ROLL-AHEAD STOPPING DISTANCE = 30 FEET MIN. (DRY PAVEMENT ASSUMED)	

STAGING SEQUENCE STAGE 1 (NORTH SIDE OF NE 12TH ST & 120TH AVE NE):

1. INSTALL TEMPORARY TRAFFIC SIGNS.
2. INSTALL TRAFFIC SAFETY DRUMS AND BARRIERS AT NIGHT.
3. SAWCUT EXISTING PAVEMENT.
4. EXCAVATE ROADWAY IN WORK ZONE.
5. CONSTRUCT TEMPORARY ACCESS RAMPS TO BUSINESSES IF REQUIRED; INSTALL TRAFFIC SAFETY DRUMS TO PREVENT TRAVEL INTO CONSTRUCTION AREA IF NECESSARY. DELINEATE DRIVEWAYS WITH TRAFFIC SAFETY DRUMS AND BUSINESS SIGNS.
6. EXCAVATE FOR JOINT UTILITY TRENCH AND INSTALL UTILITIES.
7. PLACE CSTC FOLLOWED BY CURB AND GUTTER.
8. CONSTRUCT SIDEWALKS ALONG WITH ILLUMINATION CONDUIT, JUNCTION BOXES, AND FOUNDATIONS.
9. CONSTRUCT DRIVEWAY APPROACHES.
10. PLACE FIRST TWO LAYERS OF ASPHALT; WEARING COURSE SHALL BE INSTALLED WHEN ALL OTHER STAGES HAVE BEEN COMPLETED.
11. CONSTRUCT TEMPORARY ASPHALT WEDGE BETWEEN NEW PAVEMENT SECTION AND EXISTING ROAD.
12. INSTALL LANDSCAPING WITHIN WORKZONE.
13. INSTALL TEMPORARY CHANNELIZATION STRIPING OVER NEWLY CONSTRUCTED ASPHALT FOR STAGE TWO TRAFFIC CONFIGURATION.
14. REMOVE TEMPORARY ASPHALT WEDGE BETWEEN NEW PAVEMENT SECTION AND EXISTING ROAD.
15. INSTALL WEARING COURSE LAYER OF ASPHALT.
16. REMOVE TEMPORARY TRAFFIC SIGNS AND TRAFFIC SAFETY DRUMS.

STAGING SEQUENCE STAGE 2 (SOUTH SIDE OF NE 12TH ST):

1. RELOCATE TEMPORARY TRAFFIC SIGNS TO STAGE TWO CONFIGURATION AT NIGHT.
2. RELOCATE TRAFFIC SAFETY DRUMS TO STAGE TWO CONFIGURATION AT NIGHT.
3. SAWCUT EXISTING PAVEMENT.
4. EXCAVATE ROADWAY IN WORK ZONE.
5. CONSTRUCT TEMPORARY ACCESS RAMPS TO BUSINESSES IF REQUIRED; INSTALL TRAFFIC SAFETY DRUMS TO PREVENT TRAVEL INTO CONSTRUCTION AREA IF NECESSARY. DELINEATE DRIVEWAYS WITH TRAFFIC SAFETY DRUMS AND BUSINESS SIGNS.
6. EXCAVATE FOR JOINT UTILITY TRENCH AND INSTALL UTILITIES.
7. PLACE CSTC FOLLOWED BY CURB AND GUTTER.
8. CONSTRUCT SIDEWALKS ALONG WITH ILLUMINATION CONDUIT, JUNCTION BOXES, AND FOUNDATIONS.
9. CONSTRUCT DRIVEWAY APPROACHES.
10. PLACE FIRST TWO LAYERS OF ASPHALT; WEARING COURSE SHALL BE INSTALLED WHEN ALL OTHER STAGES HAVE BEEN COMPLETED.
11. CONSTRUCT TEMPORARY ASPHALT WEDGE BETWEEN NEW PAVEMENT SECTION AND EXISTING ROAD.
12. INSTALL LANDSCAPING WITHIN WORKZONE.
13. INSTALL TEMPORARY CHANNELIZATION STRIPING OVER NEWLY CONSTRUCTED ASPHALT FOR STAGE THREE TRAFFIC CONFIGURATION.

STAGING SEQUENCE STAGE 3 (CENTRAL ZONE OF NE 12TH ST):

1. RELOCATE TEMPORARY TRAFFIC SIGNS TO STAGE THREE CONFIGURATION AT NIGHT.
2. RELOCATE TRAFFIC SAFETY DRUMS TO STAGE THREE CONFIGURATION AT NIGHT.
3. SAWCUT EXISTING PAVEMENT.
4. EXCAVATE ROADWAY IN WORK ZONE.
5. REMOVE EXISTING TRAFFIC ISLAND.
6. EXCAVATE FOR JOINT UTILITY TRENCH AND INSTALL UTILITIES.
7. PLACE CSTC FOLLOWED BY CURB AND GUTTER.
8. CONSTRUCT PROPOSED MEDIANS WITHIN WORKZONE.
9. INSTALL PRECAST TRAFFIC CURB TYPE-C.
10. PLACE FIRST TWO LAYERS OF ASPHALT; WEARING COURSE SHALL BE INSTALLED WHEN ALL OTHER STAGES HAVE BEEN COMPLETED.
11. INSTALL LANDSCAPING WITHIN WORKZONE
12. REMOVE TEMPORARY ASPHALT WEDGE BETWEEN NEW PAVEMENT SECTION AND EXISTING ROAD.
13. INSTALL WEARING COURSE LAYER OF ASPHALT.
14. REMOVE TEMPORARY TRAFFIC SIGNS AND TRAFFIC SAFETY DRUMS.

LEGEND

- – SIGN LOCATION
- – TYPE 2L BARRICADE
- – TYPE 2R BARRICADE
- – TYPE 3L BARRICADE
- – TYPE 3R BARRICADE
- – TRAFFIC SAFETY DRUM
- – PROTECTIVE VEHICLE
- PCMS – PORTABLE CHANGEABLE MESSAGE SIGN (PCMS)
- – ARROW PANEL
- – WORK ZONE/STAGING AREA
- XX' – DIRECTION OF TRAFFIC WITH LANE WIDTHS (XX)

PAUL A. FERRER, STATE OF WASHINGTON, 43172, REGISTERED PROFESSIONAL ENGINEER

NO.	DATE	BY	APPR.	REVISIONS

Approved By

TRANSPORTATION DESIGN MANAGER DATE

S. COSTA
PROJECT MANAGER DATE

S. BARTON
DESIGNED BY DATE
J. FRYE
DRAWN BY DATE
G. ROYCROFT
CHECKED BY DATE

City of Bellevue
TRANSPORTATION DEPARTMENT

HDR

NE SPRING BLVD - ZONE 1B
90% DESIGN

STAGING & TRAFFIC CONTROL LEGEND / NOTES

SHEET NAME STCG1

SHT 6 OF 184

90% SUBMITTAL NOT FOR CONSTRUCTION

SECTION 28, T. 25 N., R5E., W.M.
KING COUNTY

GENERAL NOTES:

1. SEE SHEET STCG1 FOR LEGEND, GENERAL NOTES, STAGING SEQUENCE NOTES, BUFFER DATA TABLE, SIGN SPACING TABLE, MINIMUM TAPER LENGTH TABLE AND CHANNELIZATION DEVICE SPACING TABLE.

LEGEND

- SIGN LOCATION
- TRAFFIC SAFETY DRUM
- WORK ZONE/STAGING AREA
- XX' DIRECTION OF TRAFFIC WITH LANE WIDTHS (XX)
- PROTECTIVE VEHICLE

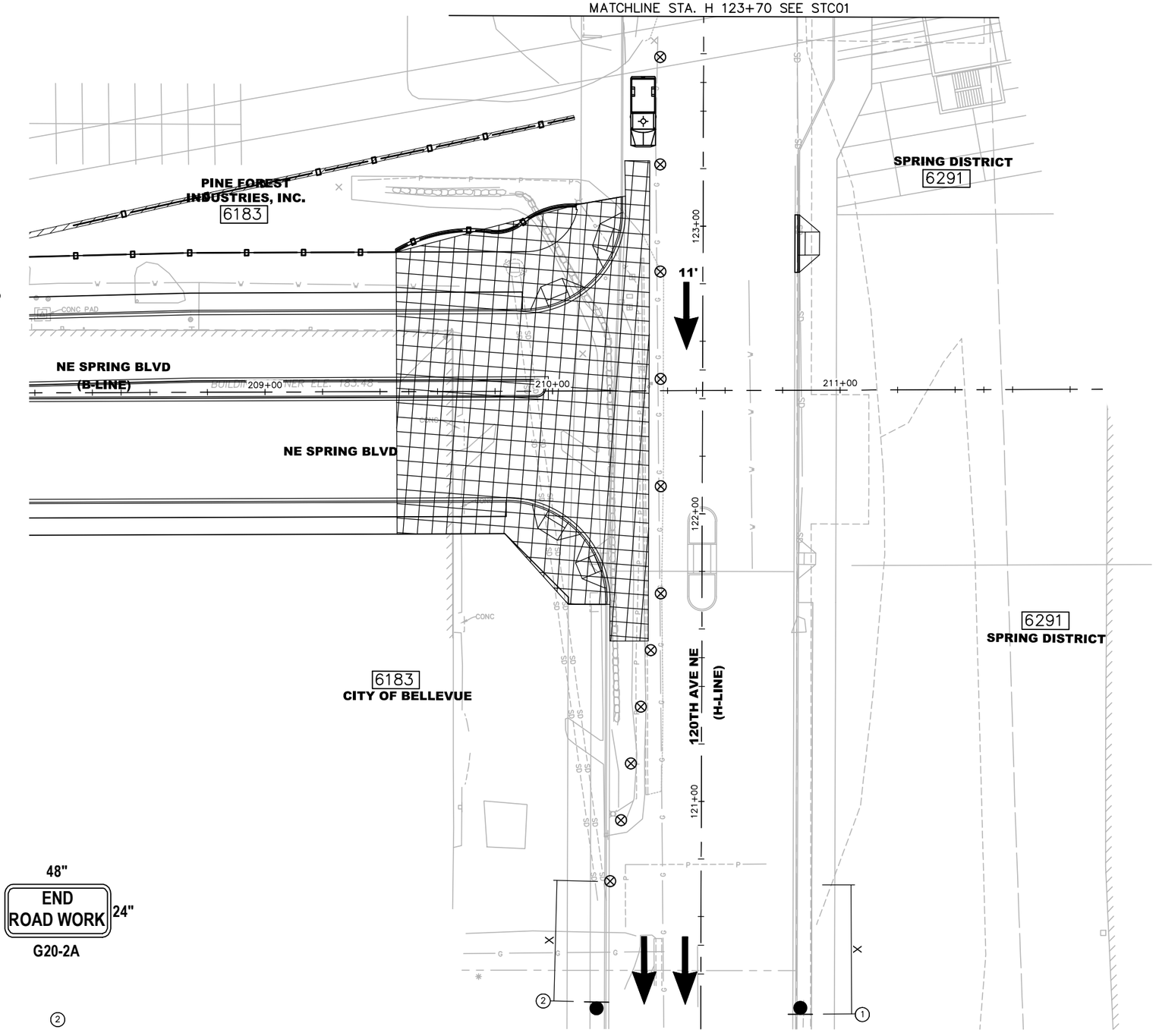

①

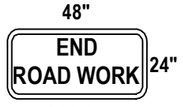

②

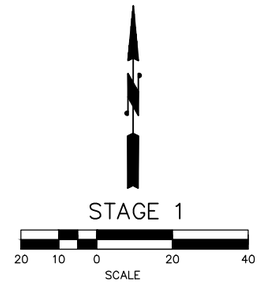

PAUL A. FERRIER STATE OF WASHINGTON 43172 REGISTERED PROFESSIONAL ENGINEER

NO.	DATE	BY	APPR.	REVISIONS

Approved By

TRANSPORTATION DESIGN MANAGER S. COSTA DATE

PROJECT MANAGER DATE

S. BARTON
DESIGNED BY DATE
J. FRYE
DRAWN BY DATE
G. ROYCROFT
CHECKED BY DATE

City of Bellevue
TRANSPORTATION DEPARTMENT

HDR

NE SPRING BLVD - ZONE 1B
90% DESIGN

STAGING & TRAFFIC CONTROL PLAN
H 120+20 TO STA. H 123+70

SHEET NAME **STC1**

SHT 7 OF 184

GENERAL NOTES:

1. SEE SHEET STCG1 FOR LEGEND, GENERAL NOTES, STAGING SEQUENCE NOTES, BUFFER DATA TABLE, SIGN SPACING TABLE, MINIMUM TAPER LENGTH TABLE AND CHANNELIZATION DEVICE SPACING TABLE.

SECTION 28, T. 25 N., R5E., W.M.
KING COUNTY

90% SUBMITTAL NOT FOR CONSTRUCTION

LEGEND

- SIGN LOCATION
- TRAFFIC SAFETY DRUM
- XX' – DIRECTION OF TRAFFIC WITH LANE WIDTHS (XX)

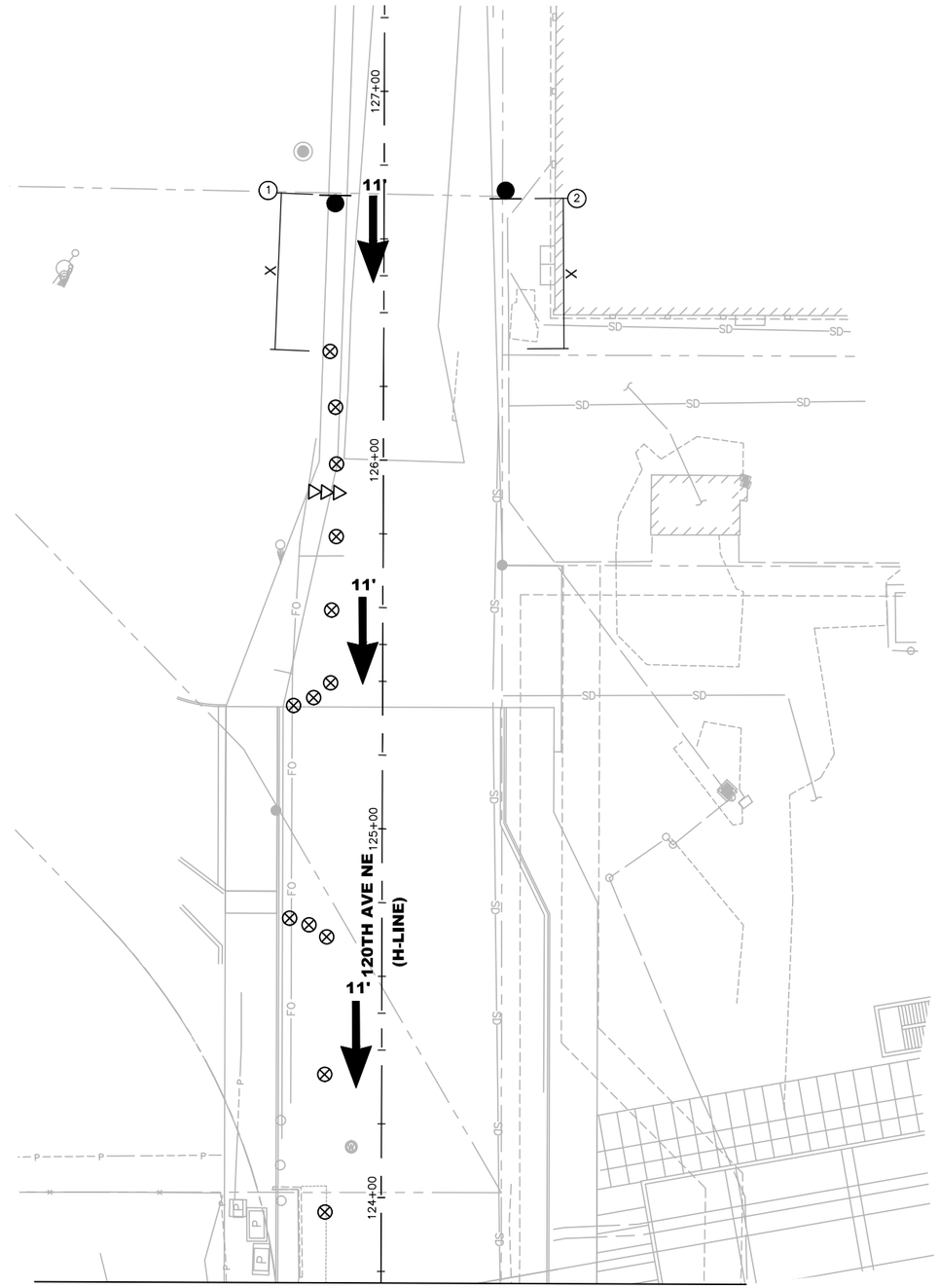

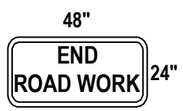

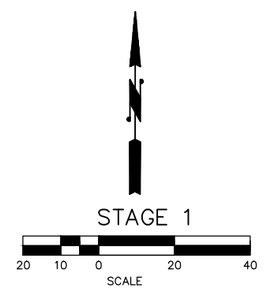

PAUL A. FERRIER
STATE OF WASHINGTON
43172
REGISTERED
PROFESSIONAL ENGINEER

NO.	DATE	BY	APPR.	REVISIONS

Approved By

TRANSPORTATION DESIGN MANAGER DATE
S. COSTA
PROJECT MANAGER DATE

S. BARTON DESIGNED BY DATE
J. FRYE DRAWN BY DATE
G. ROYCROFT CHECKED BY DATE

City of Bellevue
TRANSPORTATION DEPARTMENT

HDR

NE SPRING BLVD - ZONE 1B
90% DESIGN

STAGING & TRAFFIC CONTROL PLAN
STA. H 123+70 TO STA. H 127+00

SHEET NAME **STC2**

SHT 8 OF 184

SECTION 28, T. 25 N., R5E., W.M.
KING COUNTY

90% SUBMITTAL NOT FOR CONSTRUCTION

GENERAL NOTES:

1. UNLESS OTHERWISE NOTED, ALL DIMENSIONS ARE IN FEET.
2. CALL UTILITIES UNDERGROUND LOCATION CENTER AT 1-800-424-5555 48 HOURS PRIOR TO CONSTRUCTION.
3. UNDERGROUND UTILITIES SHOWN ARE APPROXIMATE INFORMATION CONTAINED WITHIN AS-BUILT DRAWINGS, FIELD LOCATES AND POTHOLING INFORMATION.
4. THE CONTRACTOR SHALL MAINTAIN 11 FOOT MINIMUM TRAVEL LANES DURING CONSTRUCTION EXCEPT DURING FINAL PAVEMENT RESTORATION.
5. ALL CONCRETE AND ASPHALT SURFACES TO BE REMOVED SHALL BE SAWCUT UNLESS ANOTHER METHOD OF CUTTING FOR REMOVAL IS DESIGNATED IN THE PLANS.
6. DRIVEWAY ACCESS MUST BE MAINTAINED AT ALL TIMES UNLESS OTHERWISE AGREED TO BY THE CITY OF BELLEVUE.
7. PROVIDE, INSTALL, AND MAINTAIN TEMPORARY CHAIN LINK FENCE WITH PRIVACY SCREENING ON THE RIGHT OF WAY WHERE AN EXISTING FENCE WAS REMOVED. A TEMPORARY CHAIN LINK FENCE TO REMAIN IN PLACE UNTIL THE NEW FENCE IS INSTALLED.
8. FOR SIGN EQUIPMENT REMOVAL AND ROADWAY SIGNAGE, SEE SIGNING PLANS.
9. FOR STORM PIPE AND STRUCTURE REMOVAL SEE UTILITY & DRAINAGE DEMOLITION PLANS.
10. FOR REMOVALS, RELOCATIONS, AND ADJUSTMENTS OF TRAFFIC SIGNALS AND SIGNAL PRIORITY EQUIPMENT, SEE TRAFFIC SIGNAL PLANS.
11. SAVE AND PROTECT ALL EXISTING VEGETATION OUTSIDE THE CLEARING AND GRUBBING LIMITS.
12. TREE PROTECTION FENCING SHALL BE INSTALLED AT THE BOUNDARY OF THE TREE PROTECTION ZONE PER C.O.B. CLEARING & GRUBBING DEVELOPMENT STANDARD BMP T101. THE TREE PROTECTION ZONE IS TO BE MEASURED AS THE RADIUS AROUND THE TREE CALCULATED AS 1.5 FEET FOR EVERY INCH OF TREE DIAMETER AT BREAST HEIGHT, OR A MINIMUM OF 6 FEET, WHICHEVER IS GREATER. COORDINATE WITH C.O.B. ARBORIST FOR ALL CONSTRUCTION ACTIVITIES WITHIN THE TREE PROTECTION ZONE.

SITE PREPARATION LEGEND

- CLEARING AND GRUBBING
- REMOVING ASPHALT CONC. PAVEMENT
- REMOVE TREE AND STUMP
- X — TREE PROTECTION FENCING
- FILL — FILL LINE

SITE PREPARATION NOTES:

1. REMOVE EXISTING TREE AND STUMP
2. INSTALL TREE PROTECTION FENCING
3. REMOVE EXISTING RETAINING WALL

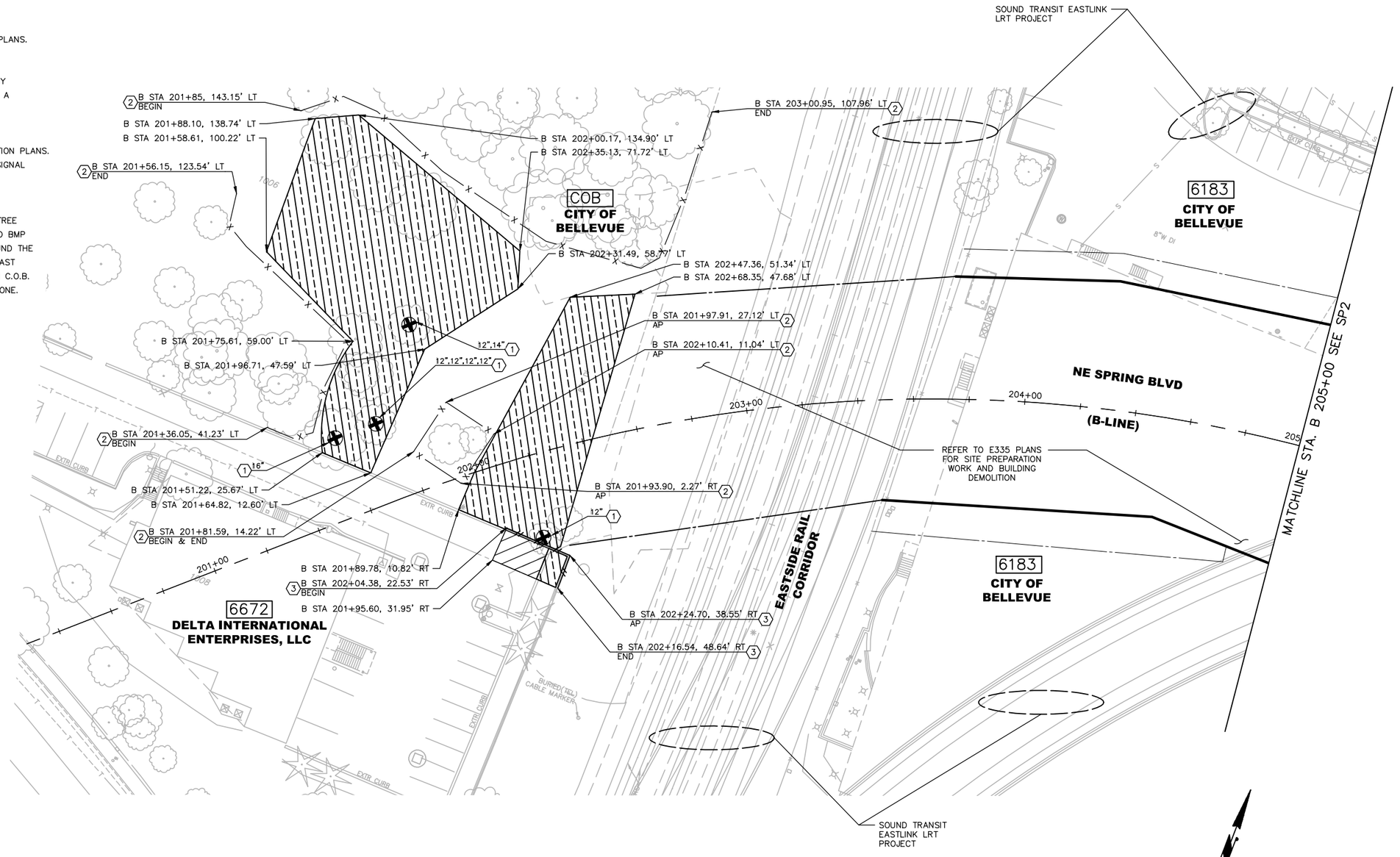

KEY PLAN

SCALE: 20 10 0 20 40

PAUL A. FERRIER, STATE OF WASHINGTON, 43172, REGISTERED PROFESSIONAL ENGINEER

NO.	DATE	BY	APPR.	REVISIONS

Approved By

TRANSPORTATION DESIGN MANAGER S. COSTA DATE

PROJECT MANAGER DATE

S. HAYS DESIGNED BY DATE

J. FRYE DRAWN BY DATE

G. ROYCROFT CHECKED BY DATE

City of Bellevue
TRANSPORTATION DEPARTMENT

HDR

NE SPRING BLVD - ZONE 1B
90% DESIGN

SITE PREPARATION PLAN
BEGIN ZONE 1B TO STA. B 205+00

SHEET NAME **SP1**

SHT 9 OF 184

90% SUBMITTAL NOT FOR CONSTRUCTION

SECTION 28, T. 25 N., R5E., W.M.
KING COUNTY

GENERAL NOTES:

1. UNLESS OTHERWISE NOTED, ALL DIMENSIONS ARE IN FEET.
2. CALL UTILITIES UNDERGROUND LOCATION CENTER AT 1-800-424-5555 48 HOURS PRIOR TO CONSTRUCTION.
3. UNDERGROUND UTILITIES SHOWN ARE APPROXIMATE INFORMATION CONTAINED WITHIN AS-BUILT DRAWINGS, FIELD LOCATES AND POTHOLING INFORMATION.
4. THE CONTRACTOR SHALL MAINTAIN 11 FOOT MINIMUM TRAVEL LANES DURING CONSTRUCTION EXCEPT DURING FINAL PAVEMENT RESTORATION.
5. ALL CONCRETE AND ASPHALT SURFACES TO BE REMOVED SHALL BE SAWCUT UNLESS ANOTHER METHOD OF CUTTING FOR REMOVAL IS DESIGNATED IN THE PLANS.
6. DRIVEWAY ACCESS MUST BE MAINTAINED AT ALL TIMES UNLESS OTHERWISE AGREED TO BY THE CITY OF BELLEVUE.
7. PROVIDE, INSTALL, AND MAINTAIN TEMPORARY CHAIN LINK FENCE WITH PRIVACY SCREENING ON THE RIGHT OF WAY WHERE AN EXISTING FENCE WAS REMOVED. A TEMPORARY CHAIN LINK FENCE TO REMAIN IN PLACE UNTIL THE NEW FENCE IS INSTALLED.
8. FOR SIGN EQUIPMENT REMOVAL AND ROADWAY SIGNAGE, SEE SIGNING PLANS.
9. FOR STORM PIPE AND STRUCTURE REMOVAL SEE UTILITY & DRAINAGE DEMOLITION PLANS.
10. FOR REMOVALS, RELOCATIONS, AND ADJUSTMENTS OF TRAFFIC SIGNALS AND SIGNAL PRIORITY EQUIPMENT, SEE TRAFFIC SIGNAL PLANS.
11. SAVE AND PROTECT ALL EXISTING VEGETATION OUTSIDE THE CLEARING AND GRUBBING LIMITS.
12. TREE PROTECTION FENCING SHALL BE INSTALLED AT THE BOUNDARY OF THE TREE PROTECTION ZONE PER C.O.B. CLEARING & GRUBBING DEVELOPMENT STANDARD BMP T101. THE TREE PROTECTION ZONE IS TO BE MEASURED AS THE RADIUS AROUND THE TREE CALCULATED AS 1.5 FEET FOR EVERY INCH OF TREE DIAMETER AT BREAST HEIGHT, OR A MINIMUM OF 6 FEET, WHICHEVER IS GREATER. COORDINATE WITH C.O.B. ARBORIST FOR ALL CONSTRUCTION ACTIVITIES WITHIN THE TREE PROTECTION ZONE.

SITE PREPARATION LEGEND

FILL — FILL LINE

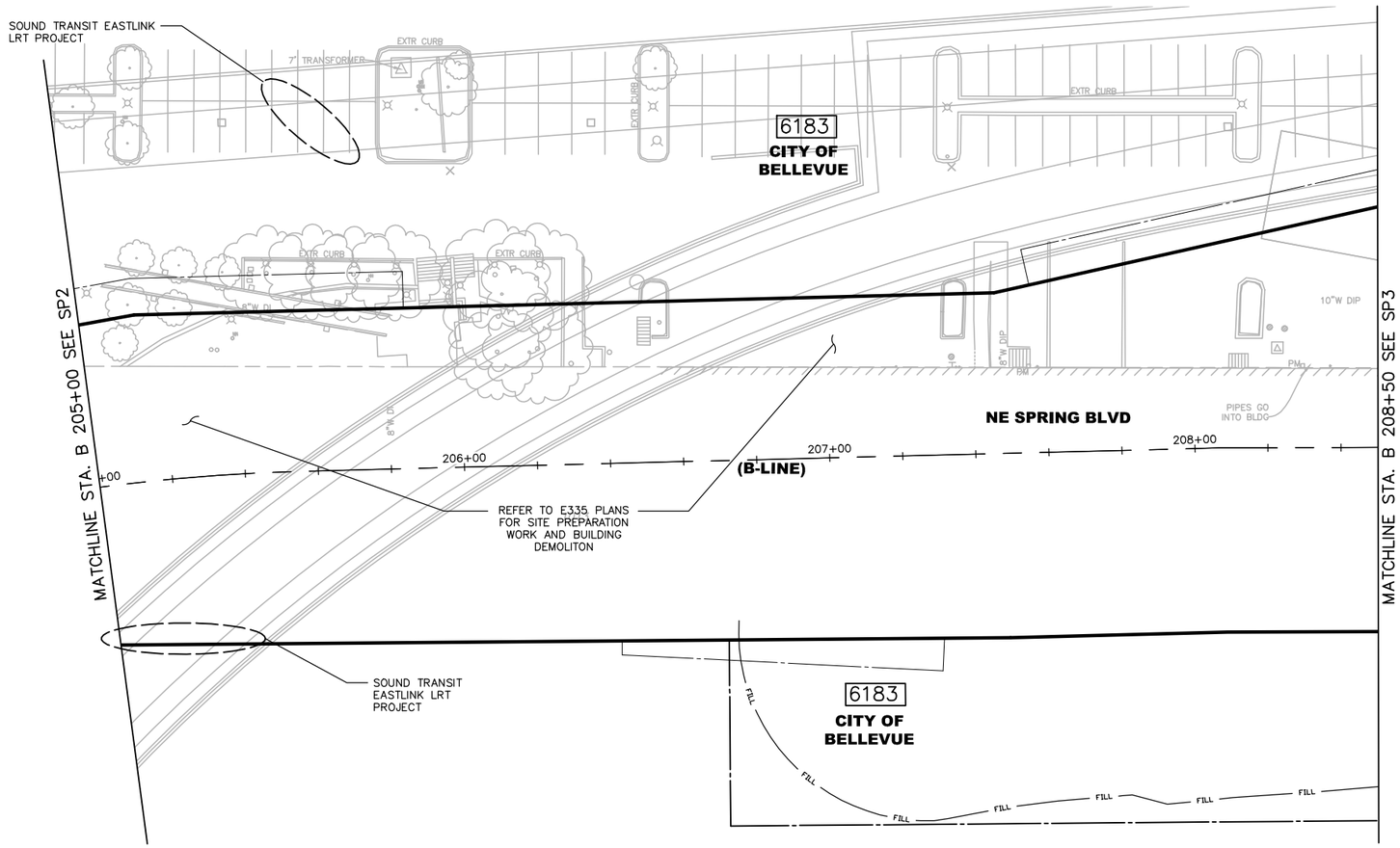

KEY PLAN

SCALE 20 10 0 20 40

PAUL A. FERRIER STATE OF WASHINGTON 43172 REGISTERED PROFESSIONAL ENGINEER

NO.	DATE	BY	APPR.	REVISIONS

Approved By

TRANSPORTATION DESIGN MANAGER S. COSTA DATE

PROJECT MANAGER DATE

S. HAYS DESIGNED BY DATE

J. FRYE DRAWN BY DATE

G. ROYCROFT CHECKED BY DATE

City of Bellevue
TRANSPORTATION DEPARTMENT

HDR

NE SPRING BLVD - ZONE 1B
90% DESIGN

SITE PREPARATION PLAN
STA. B 205+00 TO STA. B 208+50

SHEET NAME **SP2**

SHT 10 OF 184

90% SUBMITTAL NOT FOR CONSTRUCTION

SECTION 28, T. 25 N., R5E., W.M.
KING COUNTY

GENERAL NOTES:

1. UNLESS OTHERWISE NOTED, ALL DIMENSIONS ARE IN FEET.
2. CALL UTILITIES UNDERGROUND LOCATION CENTER AT 1-800-424-5555 48 HOURS PRIOR TO CONSTRUCTION.
3. UNDERGROUND UTILITIES SHOWN ARE APPROXIMATE INFORMATION CONTAINED WITHIN AS-BUILT DRAWINGS, FIELD LOCATES AND POTHOLING INFORMATION.
4. THE CONTRACTOR SHALL MAINTAIN 11 FOOT MINIMUM TRAVEL LANES DURING CONSTRUCTION EXCEPT DURING FINAL PAVEMENT RESTORATION.
5. ALL CONCRETE AND ASPHALT SURFACES TO BE REMOVED SHALL BE SAWCUT UNLESS ANOTHER METHOD OF CUTTING FOR REMOVAL IS DESIGNATED IN THE PLANS.
6. DRIVEWAY ACCESS MUST BE MAINTAINED AT ALL TIMES UNLESS OTHERWISE AGREED TO BY THE CITY OF BELLEVUE.
7. PROVIDE, INSTALL, AND MAINTAIN TEMPORARY CHAIN LINK FENCE WITH PRIVACY SCREENING ON THE RIGHT OF WAY WHERE AN EXISTING FENCE WAS REMOVED. A TEMPORARY CHAIN LINK FENCE TO REMAIN IN PLACE UNTIL THE NEW FENCE IS INSTALLED.
8. FOR SIGN EQUIPMENT REMOVAL AND ROADWAY SIGNAGE, SEE SIGNING PLANS.
9. FOR STORM PIPE AND STRUCTURE REMOVAL SEE UTILITY & DRAINAGE DEMOLITION PLANS.
10. FOR REMOVALS, RELOCATIONS, AND ADJUSTMENTS OF TRAFFIC SIGNALS AND SIGNAL PRIORITY EQUIPMENT, SEE TRAFFIC SIGNAL PLANS.
11. SAVE AND PROTECT ALL EXISTING VEGETATION OUTSIDE THE CLEARING AND GRUBBING LIMITS.
12. TREE PROTECTION FENCING SHALL BE INSTALLED AT THE BOUNDARY OF THE TREE PROTECTION ZONE PER C.O.B. CLEARING & GRUBBING DEVELOPMENT STANDARD BMP T101. THE TREE PROTECTION ZONE IS TO BE MEASURED AS THE RADIUS AROUND THE TREE CALCULATED AS 1.5 FEET FOR EVERY INCH OF TREE DIAMETER AT BREAST HEIGHT, OR A MINIMUM OF 6 FEET, WHICHEVER IS GREATER. COORDINATE WITH C.O.B. ARBORIST FOR ALL CONSTRUCTION ACTIVITIES WITHIN THE TREE PROTECTION ZONE.

SITE PREPARATION LEGEND

- SIDEWALK & CONCRETE REMOVAL
- REMOVING CEMENT CONC. PAVEMENT
- REMOVING ASPHALT CONC. PAVEMENT
- REMOVAL ITEM
- FILL LINE

SITE PREPARATION NOTES:

4. REMOVE EXISTING CEMENT CONCRETE CURB
5. REMOVE EXISTING CEMENT CONCRETE CURB AND GUTTER
6. REMOVE EXISTING TRAFFIC ISLAND
7. REMOVE RAISED PAVEMENT MARKER
8. REMOVE PLASTIC CROSSWALK LINE
9. REMOVE RECTANGULAR RAPID FLASHING BEACON LIGHT BAR
10. REMOVE FIXED BASE FOUNDATION SIGNAL POLE AND TWO RECTANGULAR RAPID FLASHING BEACON BARS

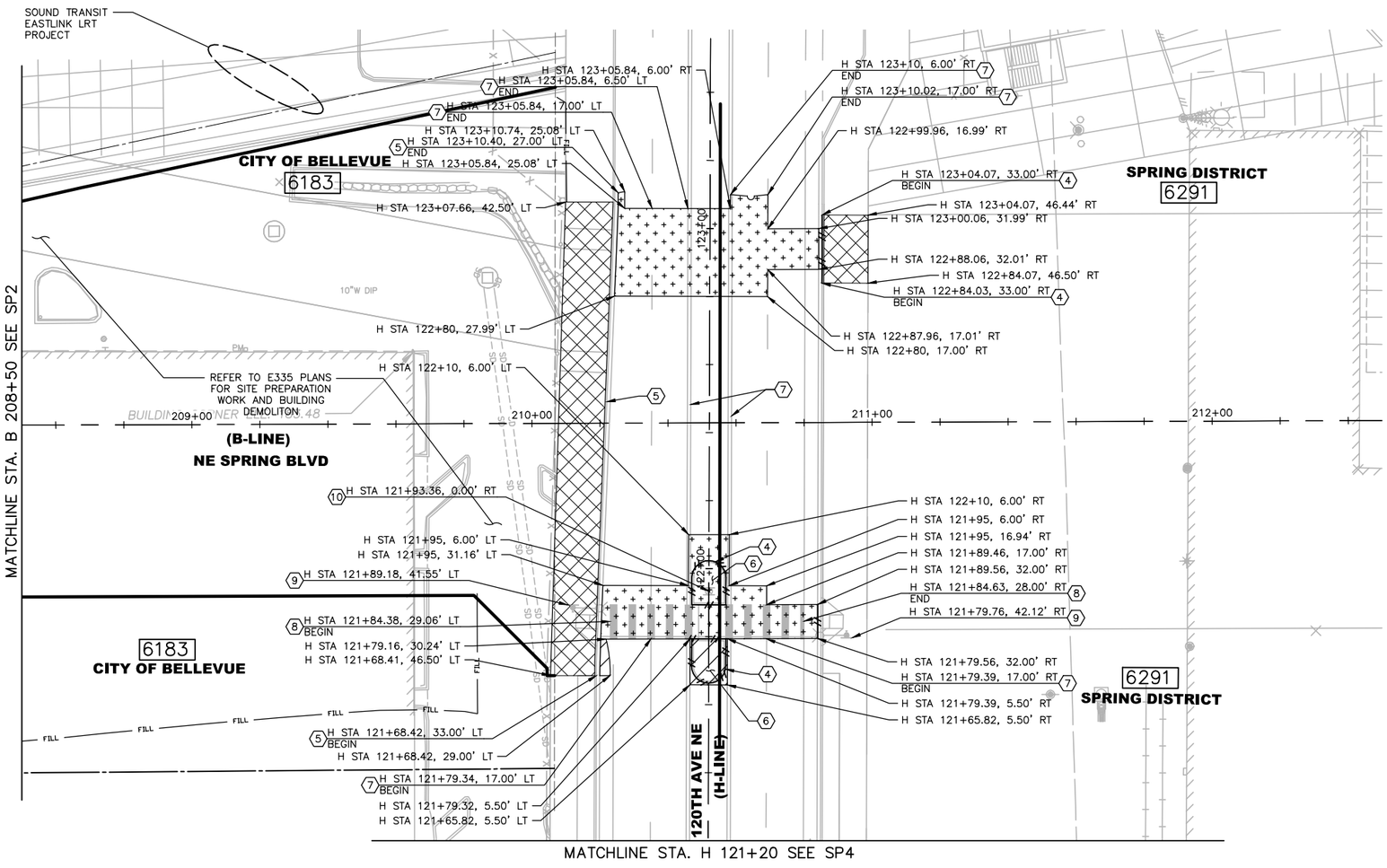

KEY PLAN

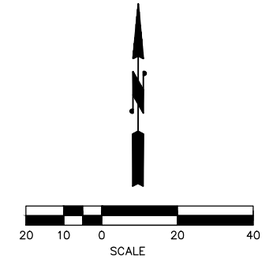

PAUL A. FERRIER STATE OF WASHINGTON 43172 REGISTERED PROFESSIONAL ENGINEER

NO.	DATE	BY	APPR.	REVISIONS

Approved By

TRANSPORTATION DESIGN MANAGER S. COSTA DATE

PROJECT MANAGER DATE

S. HAYS DESIGNED BY DATE

J. FRYE DRAWN BY DATE

G. ROYCROFT CHECKED BY DATE

City of Bellevue
TRANSPORTATION DEPARTMENT

HDR

NE SPRING BLVD - ZONE 1B
90% DESIGN

SITE PREPARATION PLAN
STA. B 208+50 TO END

SHEET NAME **SP3**

SHT 11 OF 184

90% SUBMITTAL NOT FOR CONSTRUCTION

SECTION 28, T. 25 N., R5E., W.M.
KING COUNTY

GENERAL NOTES:

1. UNLESS OTHERWISE NOTED, ALL DIMENSIONS ARE IN FEET.
2. CALL UTILITIES UNDERGROUND LOCATION CENTER AT 1-800-424-5555 48 HOURS PRIOR TO CONSTRUCTION.
3. UNDERGROUND UTILITIES SHOWN ARE APPROXIMATE INFORMATION CONTAINED WITHIN AS-BUILT DRAWINGS, FIELD LOCATES AND POTHOLING INFORMATION.
4. THE CONTRACTOR SHALL MAINTAIN 11 FOOT MINIMUM TRAVEL LANES DURING CONSTRUCTION EXCEPT DURING FINAL PAVEMENT RESTORATION.
5. ALL CONCRETE AND ASPHALT SURFACES TO BE REMOVED SHALL BE SAWCUT UNLESS ANOTHER METHOD OF CUTTING FOR REMOVAL IS DESIGNATED IN THE PLANS.
6. DRIVEWAY ACCESS MUST BE MAINTAINED AT ALL TIMES UNLESS OTHERWISE AGREED TO BY THE CITY OF BELLEVUE.
7. PROVIDE, INSTALL, AND MAINTAIN TEMPORARY CHAIN LINK FENCE WITH PRIVACY SCREENING ON THE RIGHT OF WAY WHERE AN EXISTING FENCE WAS REMOVED. A TEMPORARY CHAIN LINK FENCE TO REMAIN IN PLACE UNTIL THE NEW FENCE IS INSTALLED.
8. FOR SIGN EQUIPMENT REMOVAL AND ROADWAY SIGNAGE, SEE SIGNING PLANS.
9. FOR STORM PIPE AND STRUCTURE REMOVAL SEE UTILITY & DRAINAGE DEMOLITION PLANS.
10. FOR REMOVALS, RELOCATIONS, AND ADJUSTMENTS OF TRAFFIC SIGNALS AND SIGNAL PRIORITY EQUIPMENT, SEE TRAFFIC SIGNAL PLANS.
11. SAVE AND PROTECT ALL EXISTING VEGETATION OUTSIDE THE CLEARING AND GRUBBING LIMITS.
12. TREE PROTECTION FENCING SHALL BE INSTALLED AT THE BOUNDARY OF THE TREE PROTECTION ZONE PER C.O.B. CLEARING & GRUBBING DEVELOPMENT STANDARD BMP T101. THE TREE PROTECTION ZONE IS TO BE MEASURED AS THE RADIUS AROUND THE TREE CALCULATED AS 1.5 FEET FOR EVERY INCH OF TREE DIAMETER AT BREAST HEIGHT, OR A MINIMUM OF 6 FEET, WHICHEVER IS GREATER. COORDINATE WITH C.O.B. ARBORIST FOR ALL CONSTRUCTION ACTIVITIES WITHIN THE TREE PROTECTION ZONE.

SITE PREPARATION NOTES:

(6) REMOVE RAISED PAVEMENT MARKER
(10) REMOVE PLASTIC TRAFFIC MARKING

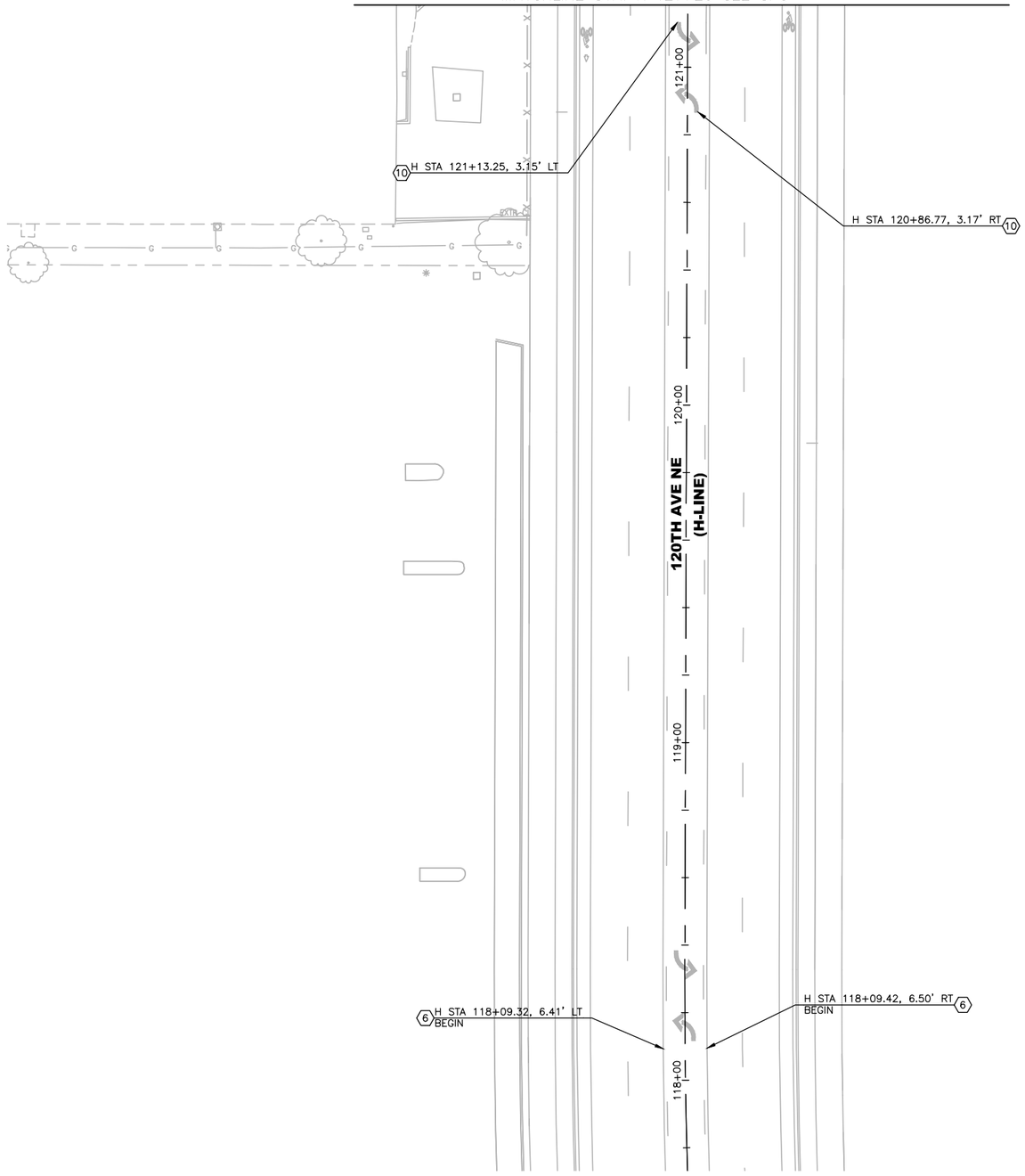

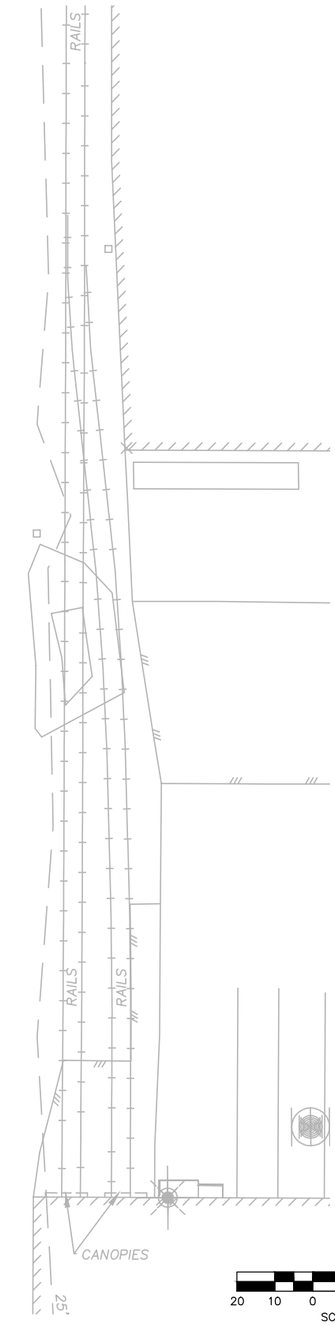

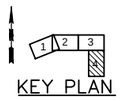

KEY PLAN

20 10 0 20 40
SCALE

PAUL A. FERRIER STATE OF WASHINGTON 43172 REGISTERED PROFESSIONAL ENGINEER

NO.	DATE	BY	APPR.	REVISIONS

Approved By

TRANSPORTATION DESIGN MANAGER S. COSTA DATE
PROJECT MANAGER DATE

S. HAYS DESIGNED BY DATE
J. FRYE DRAWN BY DATE
G. ROYCROFT CHECKED BY DATE

City of Bellevue
TRANSPORTATION DEPARTMENT

HDR

NE SPRING BLVD - ZONE 1B
90% DESIGN

SITE PREPARATION PLAN
STA. B 208+50 TO END

SHEET NAME **SP4**

SHT 12 OF 184

SECTION 28, T. 25 N., R5E., W.M. KING COUNTY

90% SUBMITTAL NOT FOR CONSTRUCTION

GENERAL NOTES:

1. UNLESS OTHERWISE NOTED, ALL DIMENSIONS ARE IN FEET.
2. RIGHT OF WAY SHOWN IS APPROXIMATE AND PROVIDED FOR REFERENCE ONLY.

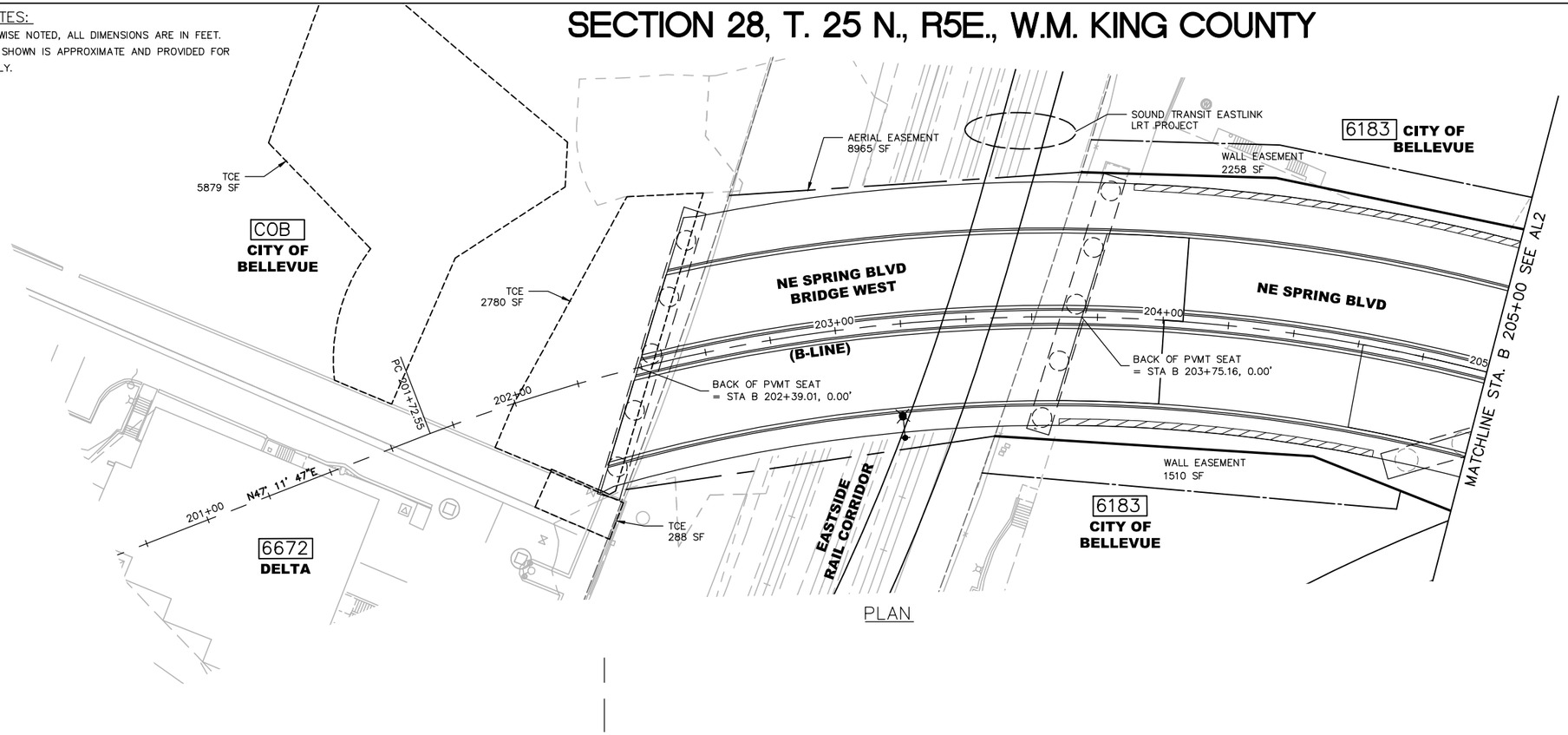

PLAN

CURVE DATA				
P.I. STATION	DELTA	RADIUS	TANGENT	LENGTH
B 203+73.13	41°49'16" RT	525'	200.59'	383.21'

LEGEND

- EXISTING RIGHT-OF-WAY
- PROPOSED RIGHT-OF-WAY
- XXXX – PARCEL NUMBER
- WALL EASEMENT
- TEMPORARY CONSTRUCTION EASEMENT
- AERIAL EASEMENT FOR BRIDGE

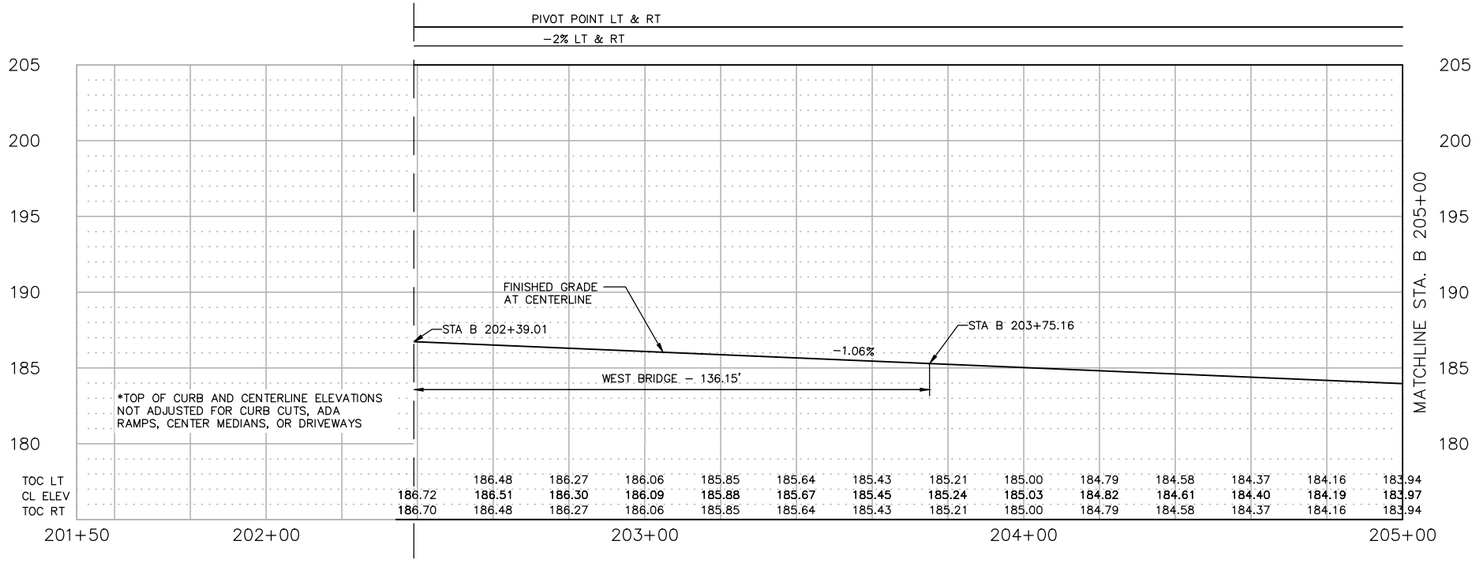

PROFILE

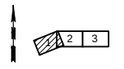

KEY PLAN

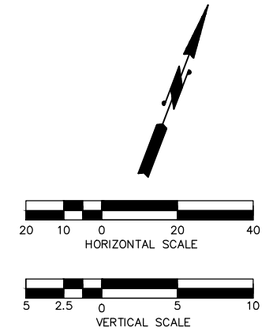

PAUL A. FERRER
STATE OF WASHINGTON
43172
REGISTERED
PROFESSIONAL ENGINEER

NO.	DATE	BY	APPR.	REVISIONS

Approved By

TRANSPORTATION DESIGN MANAGER — DATE
S. COSTA
PROJECT MANAGER — DATE

P.TEAGUE — DESIGNED BY — DATE
J. FRYE — DRAWN BY — DATE
G. ROYCROFT — CHECKED BY — DATE

City of Bellevue
TRANSPORTATION DEPARTMENT

HDR

NE SPRING BLVD - ZONE 1B
90% DESIGN

ALIGNMEN PLAN & PROFILE
BEGIN ZONE 1B TO STA. 205+00

SHEET NAME AL1

SHT 13 OF 184

GENERAL NOTES:

1. UNLESS OTHERWISE NOTED, ALL DIMENSIONS ARE IN FEET.
2. RIGHT OF WAY SHOWN IS APPROXIMATE AND PROVIDED FOR REFERENCE ONLY.

SECTION 28, T. 25 N., R5E., W.M.
KING COUNTY

90% SUBMITTAL NOT FOR CONSTRUCTION

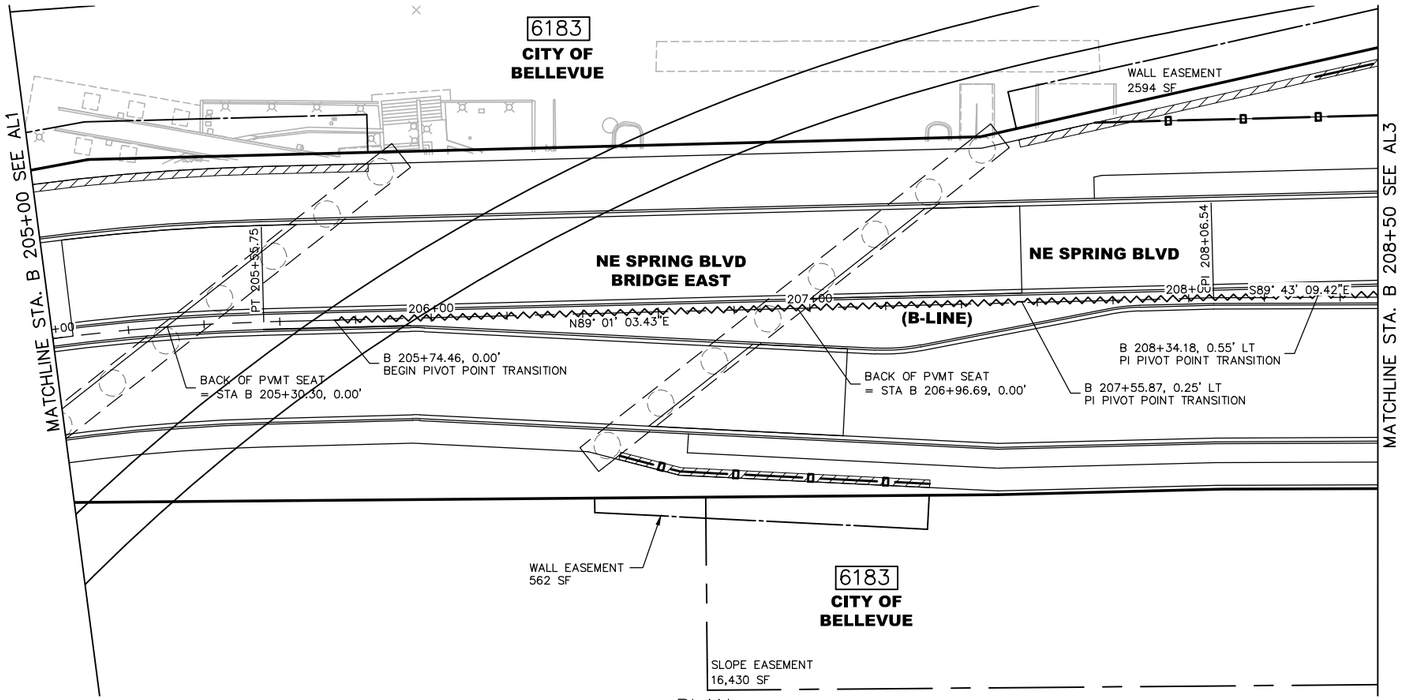

PLAN

LEGEND

- EXISTING RIGHT-OF-WAY
- PROPOSED RIGHT-OF-WAY
- XXXX – PARCEL NUMBER
- WALL EASEMENT
- SLOPE EASEMENT
- ROAD PIVOT TRANSITION Z1

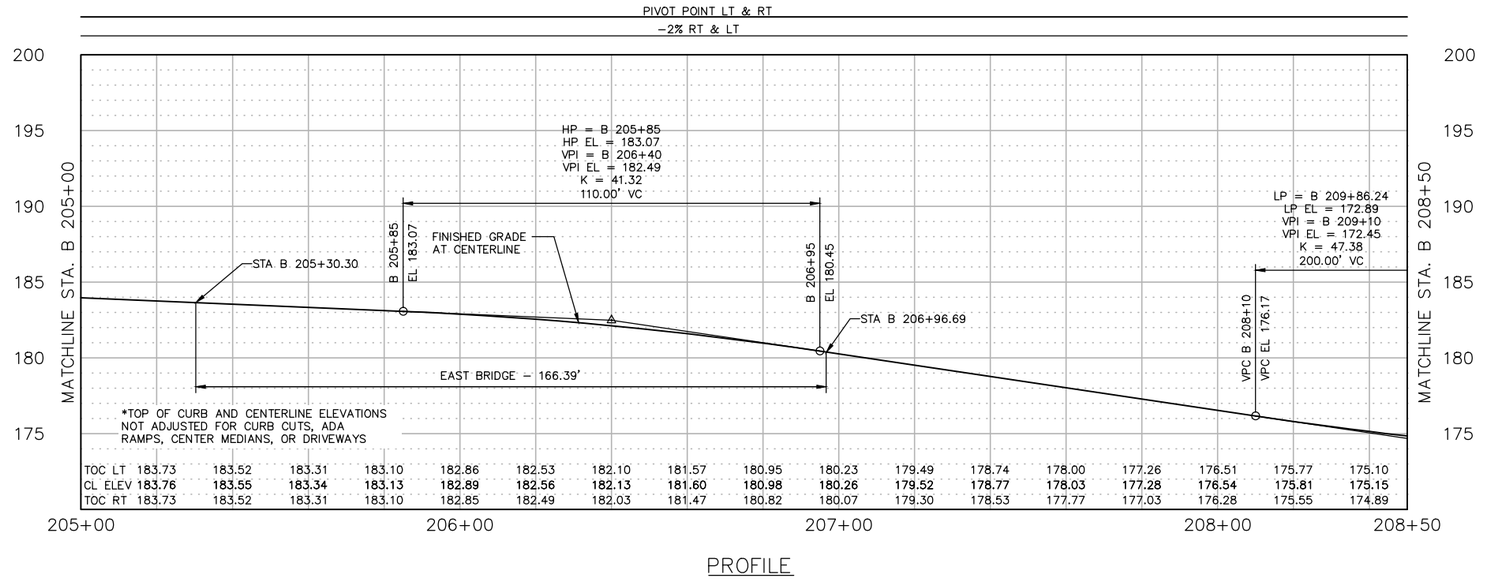

PROFILE

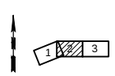

KEY PLAN

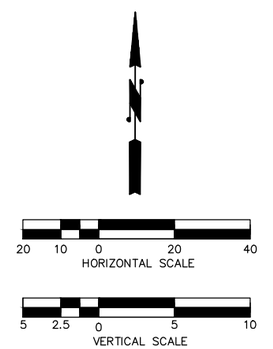

NO.	DATE	BY	APPR.	REVISIONS

Approved By

TRANSPORTATION DESIGN MANAGER — DATE
S. COSTA
PROJECT MANAGER — DATE

P.TEAGUE — DESIGNED BY — DATE
J. FRYE — DRAWN BY — DATE
G. ROYCROFT — CHECKED BY — DATE

City of Bellevue
TRANSPORTATION DEPARTMENT

HDR

NE SPRING BLVD - ZONE 1B
90% DESIGN

ALIGNMENT PLAN & PROFILE
STA. B 205+00 TO STA. B 208+50

SHEET NAME **AL2**

SHT 14 OF 184

90% SUBMITTAL NOT FOR CONSTRUCTION

SECTION 28, T. 25 N., R5E., W.M.
KING COUNTY

GENERAL NOTES:

1. UNLESS OTHERWISE NOTED, ALL DIMENSIONS ARE IN FEET.
2. RIGHT OF WAY SHOWN IS APPROXIMATE AND PROVIDED FOR REFERENCE ONLY.

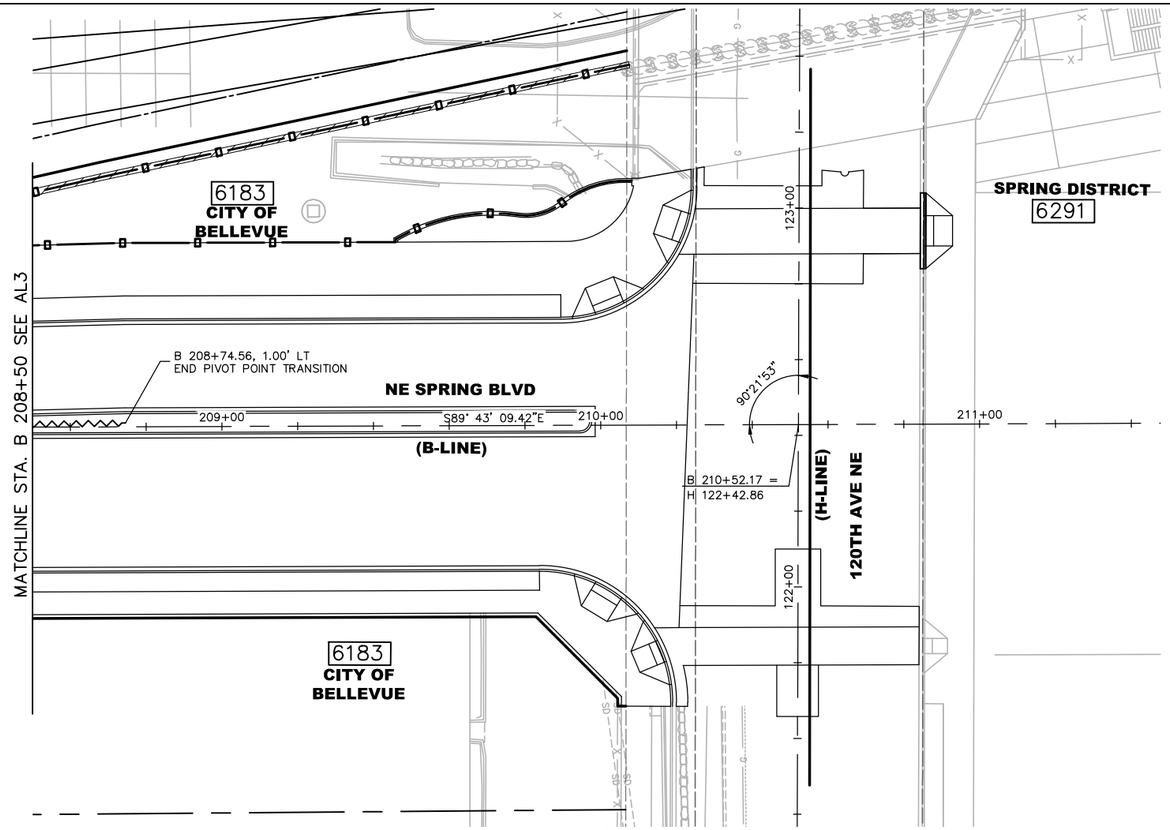

PLAN

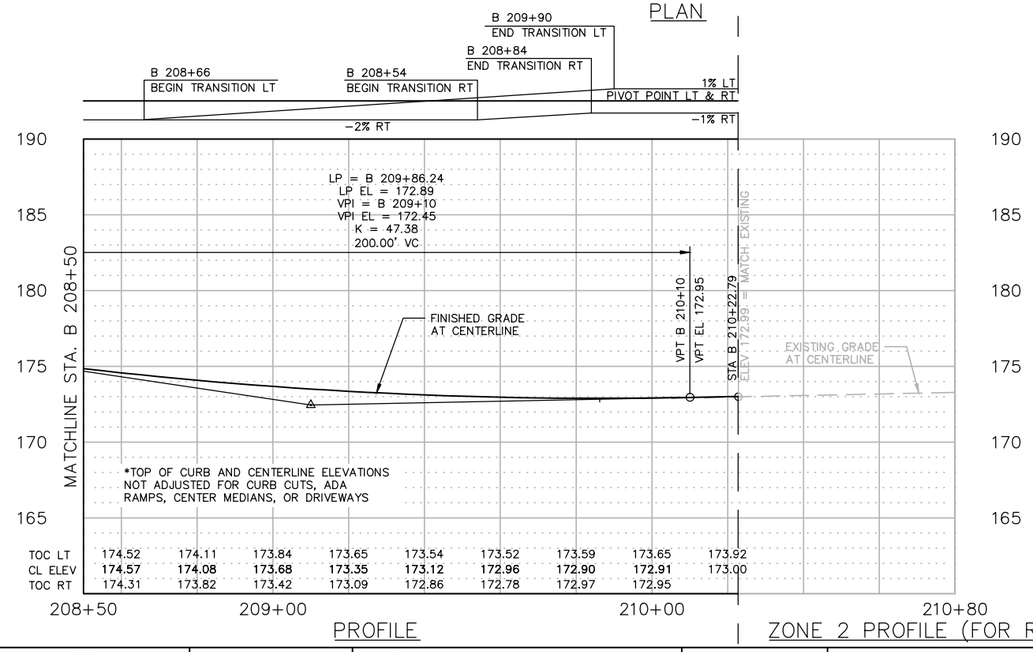

PROFILE

ZONE 2 PROFILE (FOR REFERENCE ONLY)

LEGEND

- EXISTING RIGHT-OF-WAY
- PROPOSED RIGHT-OF-WAY
- XXXX – PARCEL NUMBER
- WALL EASEMENT
- SLOPE EASEMENT
- ROAD PIVOT TRANSITION Z1

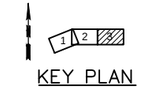

KEY PLAN

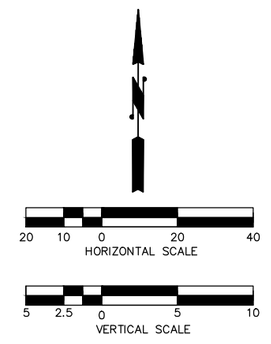

PAUL A. FERRER STATE OF WASHINGTON 43172 REGISTERED PROFESSIONAL ENGINEER

NO.	DATE	BY	APPR.	REVISIONS

Approved By

TRANSPORTATION DESIGN MANAGER DATE
S. COSTA
PROJECT MANAGER DATE

P.TEAGUE
DESIGNED BY DATE
J. FRYE
DRAWN BY DATE
G. ROYCROFT
CHECKED BY DATE

City of Bellevue
TRANSPORTATION DEPARTMENT

HDR

NE SPRING BLVD - ZONE 1B
90% DESIGN

ALIGNMENT PLAN & PROFILE
STA. B 208+50 TO END

SHEET NAME **AL3**

SHT 15 OF 184

90% SUBMITTAL NOT FOR CONSTRUCTION

SECTION 28, T. 25 N., R5E., W.M.
KING COUNTY

GENERAL NOTES:

1. CALL UTILITIES UNDERGROUND LOCATION CENTER AT 1-800-424-5555 48 HOURS PRIOR TO CONSTRUCTION.
2. THE CONTRACTOR SHALL MAINTAIN 11' FOOT MINIMUM TRAVEL LANES DURING CONSTRUCTION EXCEPT DURING FINAL PAVEMENT RESTORATION.
3. DETECTABLE WARNINGS SHALL CONSIST OF RAISED TRUNCATED DOMES MEETING APPLICABLE CHARACTERISTICS SPECIFIED BY THE ADA AND COB STANDARD DRAWINGS TE-12 AND TE-13. MATERIAL SHALL BE "CAST IN PLACE" BY ARMOR-TILE, APPLIED INTEGRAL TO THE CONCRETE POURING OF THE RAMP FOR ALL NEW CONCRETE INSTALLATIONS. MATERIAL SHALL BE PRE-FORMED MAT-TYPE "SURFACE APPLIED SYSTEMS" BY ARMOR TILE, "TOPMARK" BY FLINT TRADING OR APPROVED EQUAL FOR ALL RETROFIT AND ASPHALT INSTALLATIONS. NO SUBSTITUTIONS WILL BE PERMITTED WITHOUT PRIOR WRITTEN APPROVAL BY THE CITY. DETECTABLE WARNINGS SHALL BE YELLOW AS SPECIFIED BY THE MANUFACTURER AND SHALL BE INSTALLED PER THE MANUFACTURER'S SPECIFICATIONS.
4. SEE UTILITY SHEETS FOR JUNCTION BOX AND ELECTRICAL CONDUIT INSTALLATION. SEE COB STANDARD DRAWINGS ROW-1 AND ROW-2 FOR PAVEMENT PATCHING AND RESTORATION DETAILS.
5. SEE ROADWAY PROFILES, INTERSECTION GRADING, ALIGNMENT AND ROW SHEETS FOR CENTERLINE, CURB RAMP, CURB RETURN, AND CURB ELEVATION INFORMATION. SEE CHANNELIZATION PLANS FOR CROSSWALK LOCATIONS.
6. SEE PAVING DETAILS FOR MEDIAN GEOMETRY AND CROSSWALK DETAILS.
7. PAVING POINTS LOCATED ALONG CURB AND GUTTER ARE LOCATED AT THE LIP OF GUTTER PAN.
8. SEE COB STANDARD DET-2 AND COB DET-3 FOR CONCRETE INTERSECTION, CONCRETE PAVEMENT REMOVAL AND CONSTRUCTION DETAILS.
9. SEE ROADWAY TYPICAL SECTION SHEETS RS1-RS2 FOR PAVEMENT INFORMATION.

LEGEND

- CEMENT CONCRETE SIDEWALK
- CEMENT CONCRETE PAVEMENT
- LANDSCAPING & URBAN DESIGN AREA SEE LS AND DR SHEETS
- (X) PAVING LIMIT
- (XX) SIDEWALK POINT
- (1) CONSTRUCTION NOTES
- RETAINING WALL
- FILL — FILL LINE
- CONCRETE BARRIER

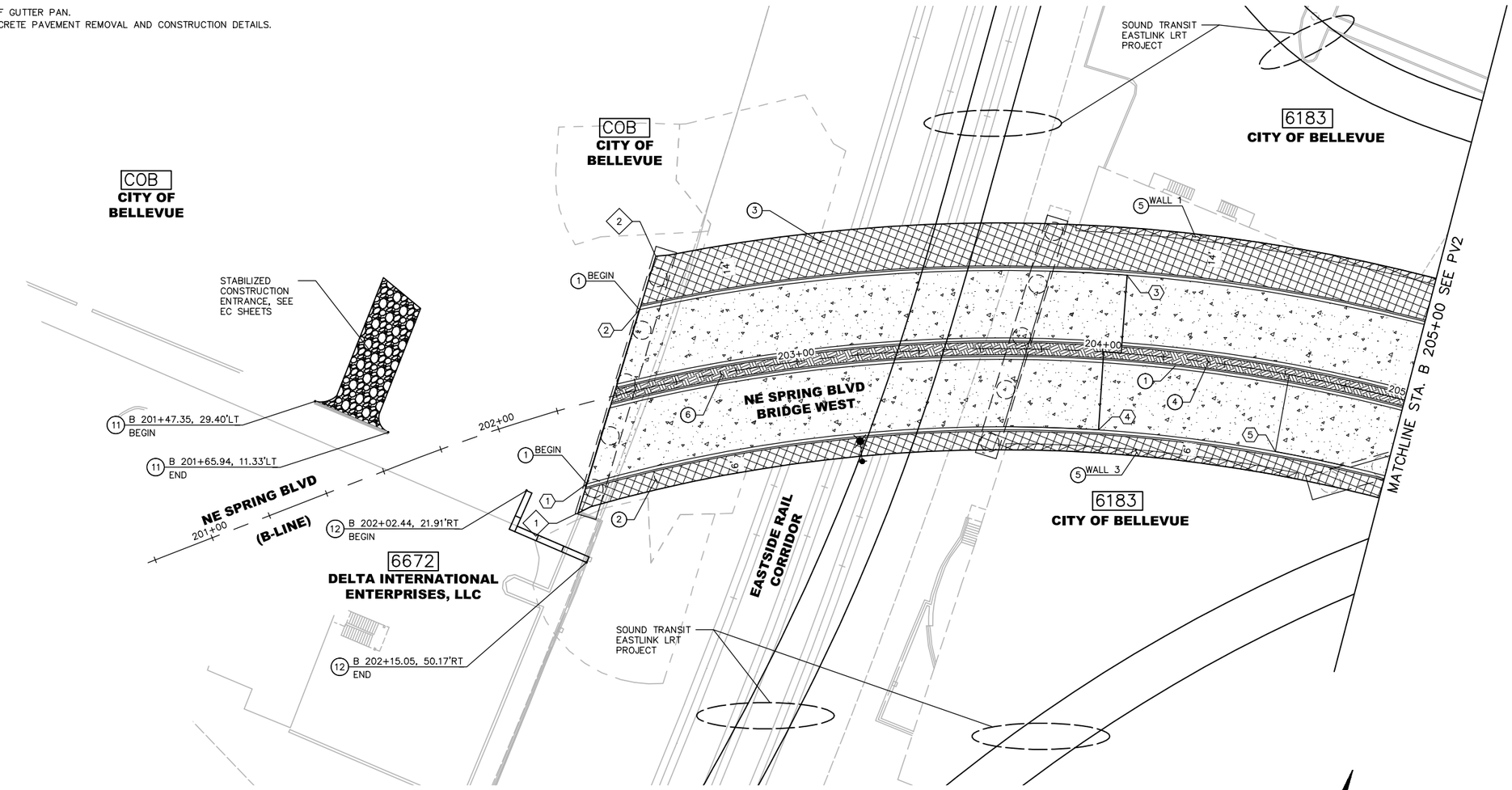

CONSTRUCTION NOTES:

(1) INSTALL CEMENT CONCRETE CURB AND GUTTER PER COB STD. DWG. TE-10.
(2) INSTALL CONCRETE SIDEWALK PER COB STD. DWG. TE-11.
(3) INSTALL MULTI-PURPOSE PATH, SEE RS AND LS SHEETS.
(4) LANDSCAPING & URBAN DESIGN AREA, SEE LS AND DR SHEETS.
(5) RETAINING WALL, SEE WP SHEETS.
(6) INSTALL MEDIAN.
(11) INSTALL TEMPORARY ASPHALT CURB, SEE DETAIL ON SHEET PVD1.
(12) INSTALL CONCRETE BARRIER TYPE 2 PER WSDOT STD. PLAN C-8.

(X) PAVING POINT TABLE

POINT NO.	STATION	OFFSET
1	B 202+22.88	25.50' RT
2	B 202+53.39	25.50' LT
3	B 204+06.07	25.50' LT
4	B 204+00.30	25.50' RT
5	B 204+61.41	25.50' RT

(XX) SIDEWALK POINT TABLE

POINT NO.	STATION	OFFSET
1	B 202+17.14	33.88' RT
2	B 202+61.63	41.45' LT

KEY PLAN

SCALE 20 10 0 20 40

PAUL A. FERRERA STATE OF WASHINGTON 43172 REGISTERED PROFESSIONAL ENGINEER

NO.	DATE	BY	APPR.	REVISIONS

Approved By

TRANSPORTATION DESIGN MANAGER DATE
S. COSTA
PROJECT MANAGER DATE

S. HAYS DESIGNED BY DATE
J. FRYE DRAWN BY DATE
G. ROYCROFT CHECKED BY DATE

City of Bellevue
TRANSPORTATION DEPARTMENT

HDR

NE SPRING BLVD - ZONE 1B
90% DESIGN

PAVING PLAN
BEGIN ZONE 1B TO STA. B 205+00

SHEET NAME **PV1**

SHT 16 OF 184

SECTION 28, T. 25 N., R5E., W.M.
KING COUNTY

90% SUBMITTAL NOT FOR CONSTRUCTION

GENERAL NOTES:

1. CALL UTILITIES UNDERGROUND LOCATION CENTER AT 1-800-424-5555 48 HOURS PRIOR TO CONSTRUCTION.
2. THE CONTRACTOR SHALL MAINTAIN 11' FOOT MINIMUM TRAVEL LANES DURING CONSTRUCTION EXCEPT DURING FINAL PAVEMENT RESTORATION.
3. DETECTABLE WARNINGS SHALL CONSIST OF RAISED TRUNCATED DOMES MEETING APPLICABLE CHARACTERISTICS SPECIFIED BY THE ADA AND COB STANDARD DRAWINGS TE-12 AND TE-13. MATERIAL SHALL BE "CAST IN PLACE" BY ARMOR-TILE, APPLIED INTEGRAL TO THE CONCRETE POURING OF THE RAMP FOR ALL NEW CONCRETE INSTALLATIONS. MATERIAL SHALL BE PRE-FORMED MAT-TYPE "SURFACE APPLIED SYSTEMS" BY ARMOR TILE, "TOPMARK" BY FLINT TRADING OR APPROVED EQUAL FOR ALL RETROFIT AND ASPHALT INSTALLATIONS. NO SUBSTITUTIONS WILL BE PERMITTED WITHOUT PRIOR WRITTEN APPROVAL BY THE CITY. DETECTABLE WARNINGS SHALL BE YELLOW AS SPECIFIED BY THE MANUFACTURER AND SHALL BE INSTALLED PER THE MANUFACTURER'S SPECIFICATIONS.
4. SEE UTILITY SHEETS FOR JUNCTION BOX AND ELECTRICAL CONDUIT INSTALLATION. SEE COB STANDARD DRAWINGS ROW-1 AND ROW-2 FOR PAVEMENT PATCHING AND RESTORATION DETAILS.
5. SEE ROADWAY PROFILES, INTERSECTION GRADING, ALIGNMENT AND ROW SHEETS FOR CENTERLINE, CURB RAMP, CURB RETURN, AND CURB ELEVATION INFORMATION. SEE CHANNELIZATION PLANS FOR CROSSWALK LOCATIONS.
6. SEE PAVING DETAILS FOR MEDIAN GEOMETRY AND CROSSWALK DETAILS.
7. PAVING POINTS LOCATED ALONG CURB AND GUTTER ARE LOCATED AT THE LIP OF GUTTER PAN.
8. SEE COB STANDARD DET-2 AND COB DET-3 FOR CONCRETE INTERSECTION, CONCRETE PAVEMENT REMOVAL AND CONSTRUCTION DETAILS.
9. SEE ROADWAY TYPICAL SECTION SHEET RS1-RS2 FOR PAVEMENT INFORMATION.

LEGEND

- CEMENT CONCRETE SIDEWALK
- CEMENT CONCRETE PAVEMENT
- PERMEABLE CONCRETE PAVERS. SEE LS SHEETS.
- LANDSCAPING & URBAN DESIGN AREA SEE LS AND DR SHEETS
- (X) PAVING LIMIT
- (XX) SIDEWALK POINT
- (1) CONSTRUCTION NOTES
- RETAINING WALL
- FILL — FILL LINE
- PEDESTRIAN RAILING

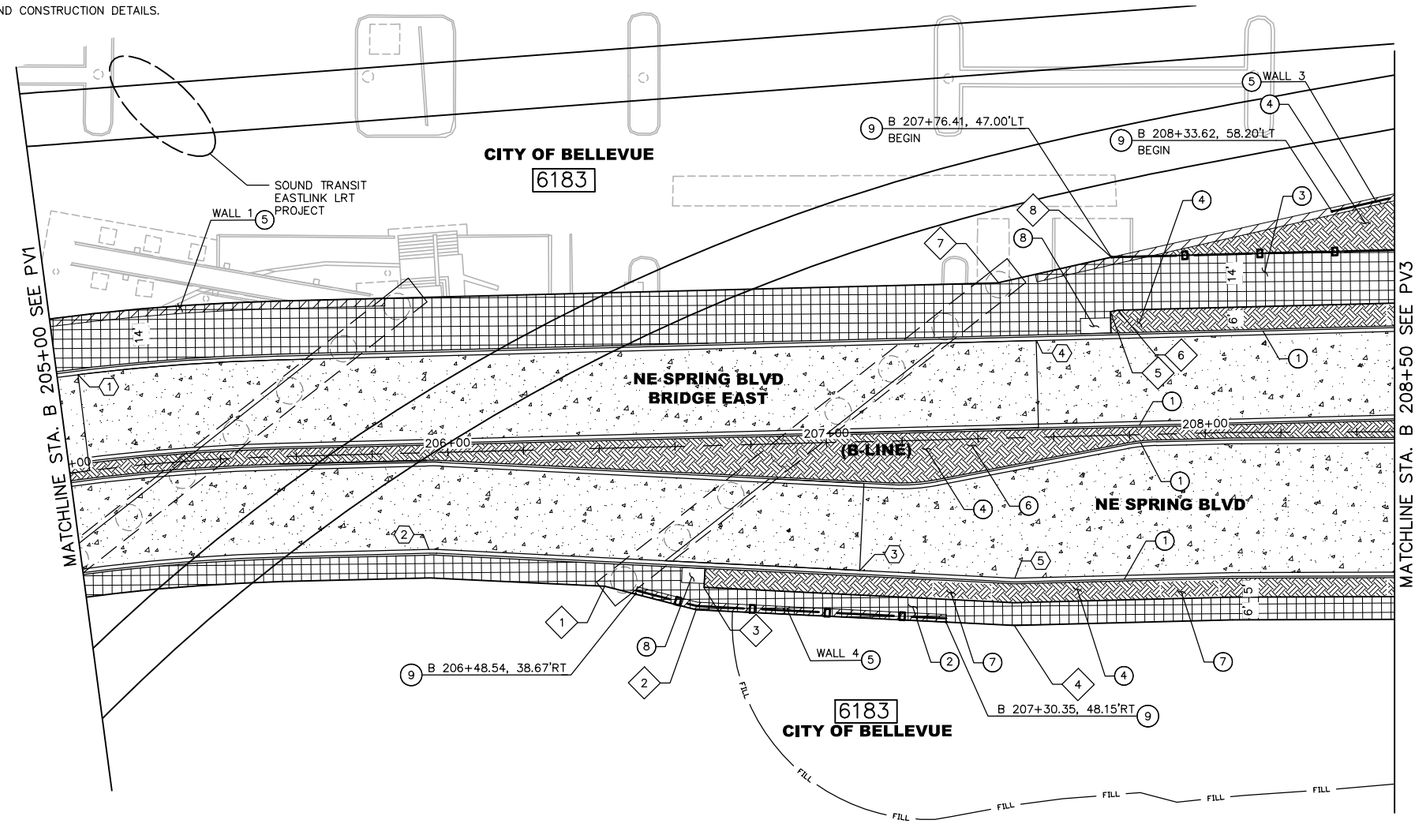

CONSTRUCTION NOTES:

(1) INSTALL CEMENT CONCRETE CURB AND GUTTER PER COB STD. DWG. TE-10.
(2) INSTALL CONCRETE SIDEWALK PER COB STD. DWG. TE-11.
(3) INSTALL MULTI-PURPOSE PATH. SEE RS AND LS SHEETS.
(4) LANDSCAPING & URBAN DESIGN AREA. SEE LS AND DR SHEETS.
(5) RETAINING WALL, SEE WP SHEETS.
(6) INSTALL MEDIAN.
(7) BIORETENTION PLANTER BOX. SEE LS AND DR SHEETS.
(8) FILTERRA. SEE DR SHEETS.
(9) INSTALL PEDESTRIAN RAILING PER DETAILS ON SHEET LSD8.

(X) PAVING POINT TABLE

POINT NO.	STATION	OFFSET
1	B 205+05.30	25.50' LT
2	B 205+94.44	25.50' RT
3	B 207+07.90	33.94' RT
4	B 207+56.04	25.50' LT
5	B 207+48.76	37.00' RT

(XX) SIDEWALK POINT TABLE

POINT NO.	STATION	OFFSET
1	B 206+40.52	36.40' RT
2	B 206+64.54	43.22' RT
3	B 206+66.69	37.36' RT
4	B 207+48.29	49.50' RT
5	B 207+75.80	32.60' LT
6	B 207+77.80	33.00' LT
7	B 207+46.49	41.02' LT
8	B 207+76.41	47.00' LT

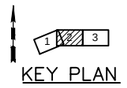

KEY PLAN

20 10 0 20 40
SCALE

PAUL A. FERRER STATE OF WASHINGTON 43172 REGISTERED PROFESSIONAL ENGINEER

NO.	DATE	BY	APPR.	REVISIONS

Approved By

TRANSPORTATION DESIGN MANAGER — DATE
S. COSTA
PROJECT MANAGER — DATE

S. HAYS — DESIGNED BY — DATE
J. FRYE — DRAWN BY — DATE
G. ROYCROFT — CHECKED BY — DATE

City of Bellevue
TRANSPORTATION DEPARTMENT

HDR

NE SPRING BLVD - ZONE 1B
90% DESIGN

PAVING PLAN
STA. B 205+00 TO STA. B 208+50

SHEET NAME **PV2**

SHT 17 OF 184

90% SUBMITTAL NOT FOR CONSTRUCTION

SECTION 28, T. 25 N., R5E., W.M.
KING COUNTY

GENERAL NOTES:

1. CALL UTILITIES UNDERGROUND LOCATION CENTER AT 1-800-424-5555 48 HOURS PRIOR TO CONSTRUCTION.
2. THE CONTRACTOR SHALL MAINTAIN 11' FOOT MINIMUM TRAVEL LANES DURING CONSTRUCTION EXCEPT DURING FINAL PAVEMENT RESTORATION.
3. DETECTABLE WARNINGS SHALL CONSIST OF RAISED TRUNCATED DOMES MEETING APPLICABLE CHARACTERISTICS SPECIFIED BY THE ADA AND COB STANDARD DRAWINGS TE-12 AND TE-13. MATERIAL SHALL BE "CAST IN PLACE" BY ARMOR-TILE, APPLIED INTEGRAL TO THE CONCRETE POURING OF THE RAMP FOR ALL NEW CONCRETE INSTALLATIONS. MATERIAL SHALL BE PRE-FORMED MAT-TYPE "SURFACE APPLIED SYSTEMS" BY ARMOR TILE, "TOPMARK" BY FLINT TRADING OR APPROVED EQUAL FOR ALL RETROFIT AND ASPHALT INSTALLATIONS. NO SUBSTITUTIONS WILL BE PERMITTED WITHOUT PRIOR WRITTEN APPROVAL BY THE CITY. DETECTABLE WARNINGS SHALL BE YELLOW AS SPECIFIED BY THE MANUFACTURER AND SHALL BE INSTALLED PER THE MANUFACTURER'S SPECIFICATIONS.
4. SEE UTILITY SHEETS FOR JUNCTION BOX AND ELECTRICAL CONDUIT INSTALLATION. SEE COB STANDARD DRAWINGS ROW-1 AND ROW-2 FOR PAVEMENT PATCHING AND RESTORATION DETAILS.
5. SEE ROADWAY PROFILES, INTERSECTION GRADING, ALIGNMENT AND ROW SHEETS FOR CENTERLINE, CURB RAMP, CURB RETURN, AND CURB ELEVATION INFORMATION. SEE CHANNELIZATION PLANS FOR CROSSWALK LOCATIONS.
6. SEE PAVING DETAILS FOR MEDIAN GEOMETRY AND CROSSWALK DETAILS.
7. PAVING POINTS LOCATED ALONG CURB AND GUTTER ARE LOCATED AT THE LIP OF GUTTER PAN.
8. SEE COB STANDARD DET-2 AND COB DET-3 FOR CONCRETE INTERSECTION, CONCRETE PAVEMENT REMOVAL AND CONSTRUCTION DETAILS.
9. SEE ROADWAY TYPICAL SECTION SHEET RS2 FOR PAVEMENT INFORMATION.

LEGEND

- CEMENT CONCRETE SIDEWALK
- CEMENT CONCRETE PAVEMENT
- CEMENT CONCRETE CROSSWALK
- HMA PAVEMENT - FULL DEPTH
- PERMEABLE CONCRETE PAVERS. SEE LS SHEETS.
- LANDSCAPING & URBAN DESIGN AREA SEE LS AND DR SHEETS
- (X) PAVING LIMIT
- (XX) SIDEWALK POINT
- (1) CONSTRUCTION NOTES
- RETAINING WALL
- FILL — FILL LINE
- PEDESTRIAN RAILING

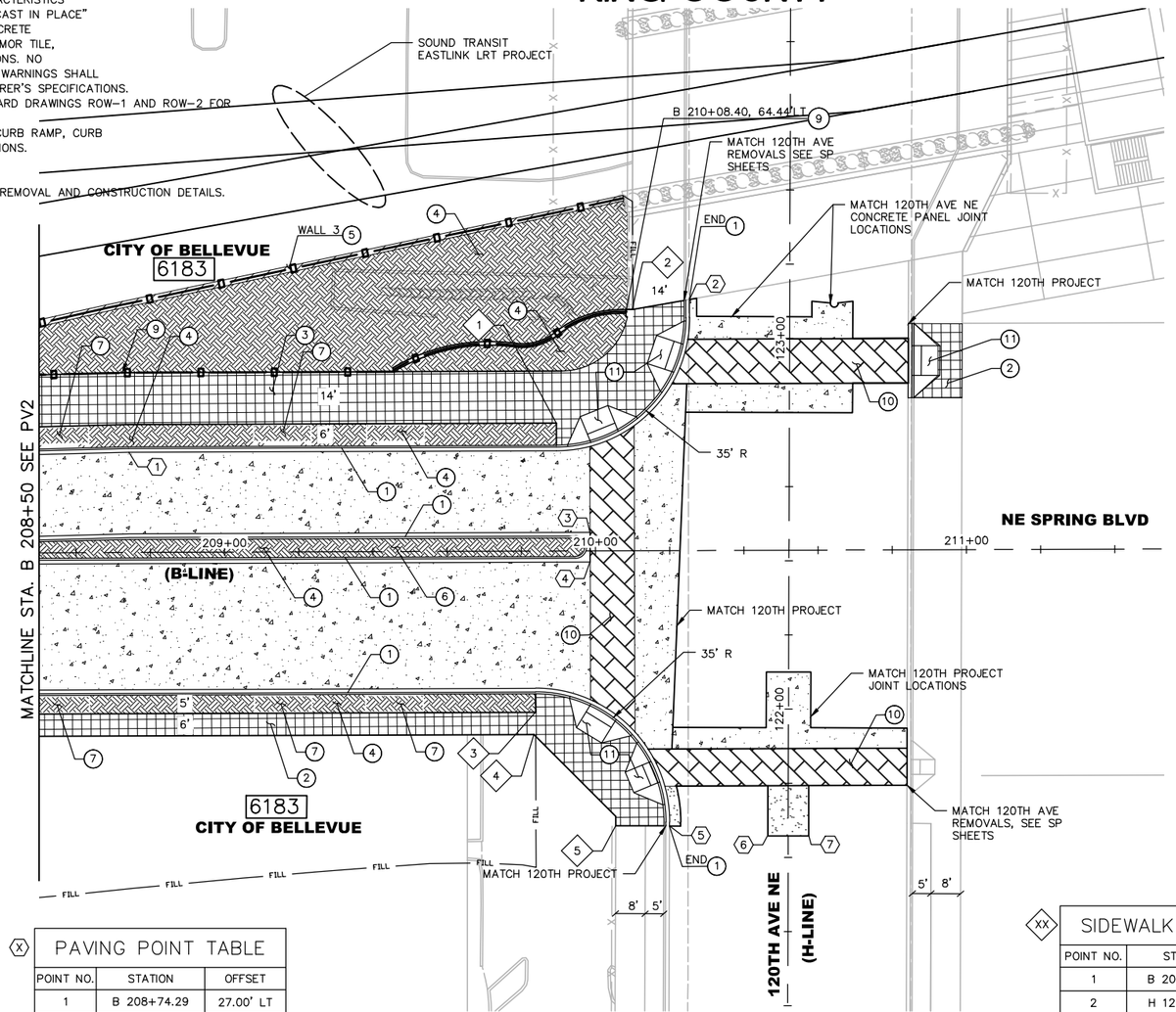

CONSTRUCTION NOTES:

1. INSTALL CEMENT CONCRETE CURB AND GUTTER PER COB STD. DWG. TE-10.
2. INSTALL CONCRETE SIDEWALK PER COB STD. DWG. TE-11.
3. INSTALL MULTI-PURPOSE PATH. SEE RS AND LS SHEETS.
4. LANDSCAPING & URBAN DESIGN AREA. SEE LS AND DR SHEETS.
5. RETAINING WALL, SEE WP SHEETS.
6. INSTALL MEDIAN.
7. BIORETENTION PLANTER BOX, SEE LS AND DR SHEETS.
9. INSTALL PEDESTRIAN RAILING PER DETAILS ON SHEET LSD8.
10. PATTERNED CEMENT CONCRETE CROSSWALK PER SHEET PVD1. LOCATION PER CHANNELIZATION PLANS.
12. INSTALL CEMENT CONCRETE SIDEWALK RAMP TYPE 1A PER COB STD. DWG. TE-12B.

(X) PAVING POINT TABLE

POINT NO.	STATION	OFFSET
1	B 208+74.29	27.00' LT
2	H 123+10.40	27.00' LT
3	B 209+98.54	5.00' LT
4	B 209+98.54	3.00' RT
5	H 121+68.42	32.00' LT
6	H 121+65.82	5.50' LT
7	H 121+65.82	5.50' RT

(XX) SIDEWALK POINT TABLE

POINT NO.	STATION	OFFSET
1	B 209+89.57	34.50' LT
2	H 123+07.66	42.50' LT
3	B 209+83.70	43.50' RT
4	B 209+83.21	49.50' RT
5	H 121+68.42	46.50' LT

KEY PLAN

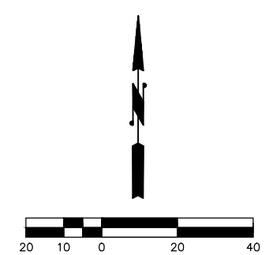

PAUL A. FERRIER — STATE OF WASHINGTON — 43172 — REGISTERED PROFESSIONAL ENGINEER

NO.	DATE	BY	APPR.	REVISIONS

Approved By

TRANSPORTATION DESIGN MANAGER S. COSTA DATE

PROJECT MANAGER DATE

S. HAYS — DESIGNED BY DATE

J. FRYE — DRAWN BY DATE

G. ROYCROFT — CHECKED BY DATE

City of Bellevue
TRANSPORTATION DEPARTMENT

HDR

NE SPRING BLVD - ZONE 1B
90% DESIGN

PAVING PLAN
STA. B 208+50 TO END

SHEET NAME **PV3**

SHT 18 OF 184

GENERAL NOTES

1. UNLESS OTHERWISE NOTED, ALL DIMENSIONS ARE IN FEET.
2. CROSSWALK EXPANSION JOINTS TO MATCH EXISTING 120TH AVE NE CONCRETE PANEL JOINTS.
3. FOR LONGITUDINAL CONTRACTION JOINT DETAIL, SEE SHEET PVD2.
4. FOR TRANSVERSE CONTRACITON JOINT DETAIL, SEE SHEET PVD2.

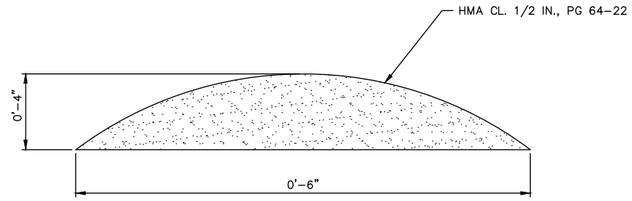

TEMPORARY ASPHALT CURB DETAIL
N.T.S.

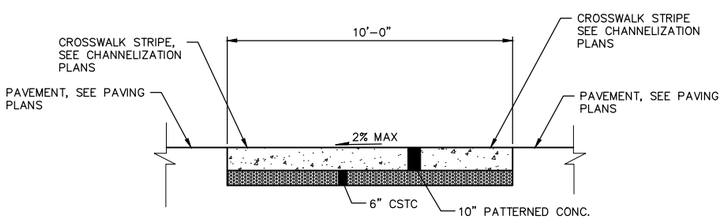

SECTION

PATTERNED CONCRETE CROSSWALK DETAIL
N.T.S.

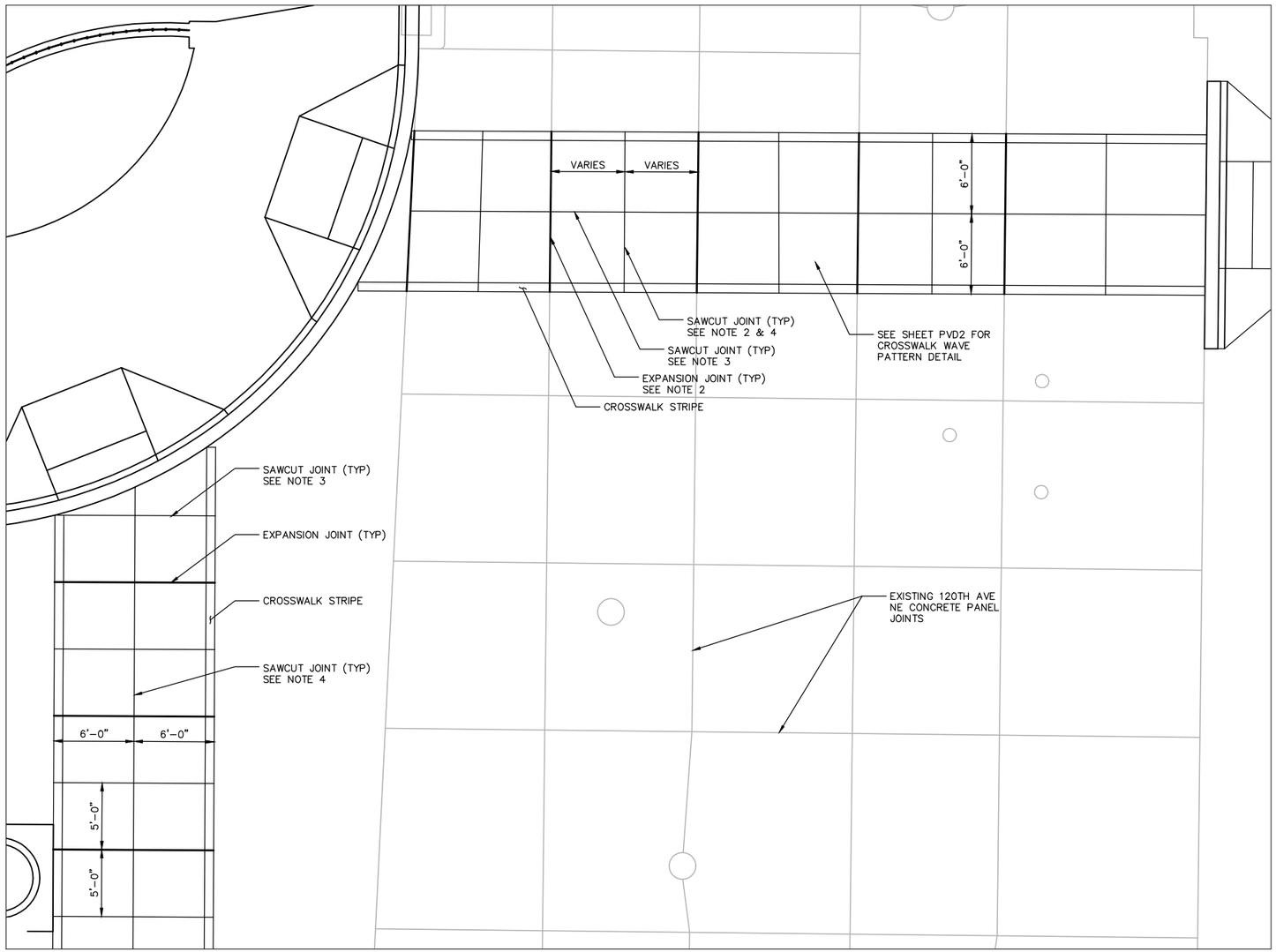

PATTERNED CONCRETE CROSSWALK DETAIL
N.T.S.

PAUL A. FERRIER — STATE OF WASHINGTON — 43172 — REGISTERED PROFESSIONAL ENGINEER

NO.	DATE	BY	APPR.	REVISIONS

Approved By

TRANSPORTATION DESIGN MANAGER S. COSTA DATE

PROJECT MANAGER DATE

S. HAYS
DESIGNED BY DATE
J. FRYE
DRAWN BY DATE
G. ROYCROFT
CHECKED BY DATE

City of Bellevue
TRANSPORTATION DEPARTMENT

HDR

NE SPRING BLVD - ZONE 1B
90% DESIGN

PAVING DETAILS

SHEET NAME **PVD1**

SHT 19 OF 184

GENERAL NOTES:

1. UNLESS OTHERWISE NOTED, ALL DIMENSIONS ARE IN FEET AND INCHES.

90% SUBMITTAL NOT FOR CONSTRUCTION

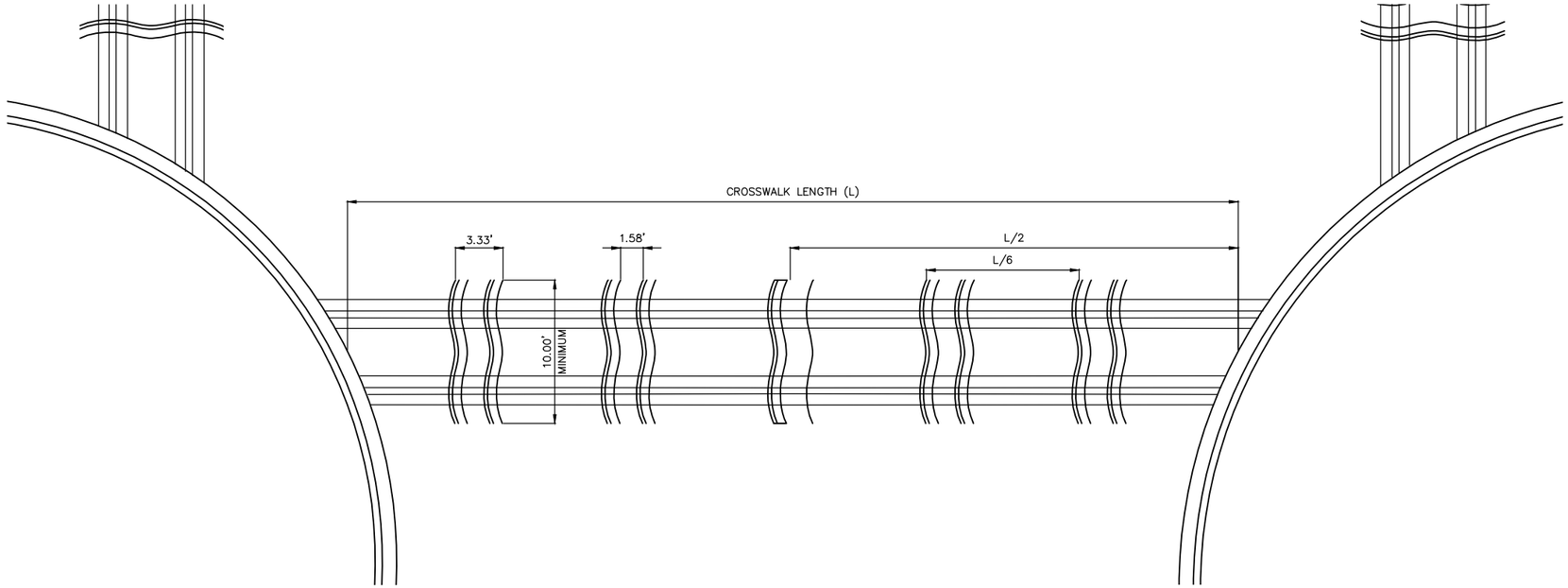

CROSSWALK WAVE PATTERN DETAIL

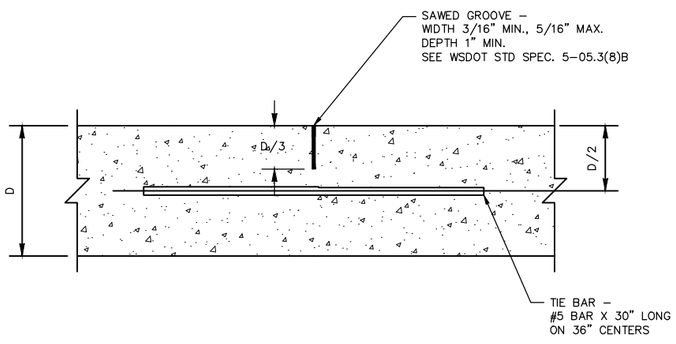

LONGITUDINAL CONTRACTION JOINT

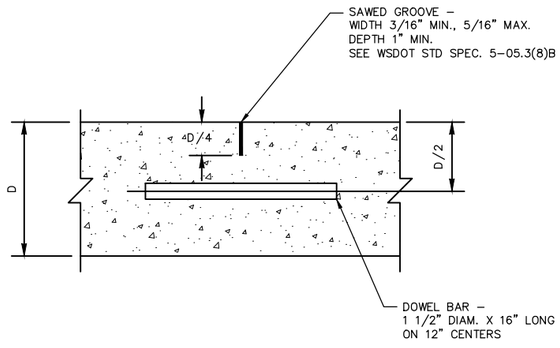

TRANSVERSE CONTRACTION JOINT

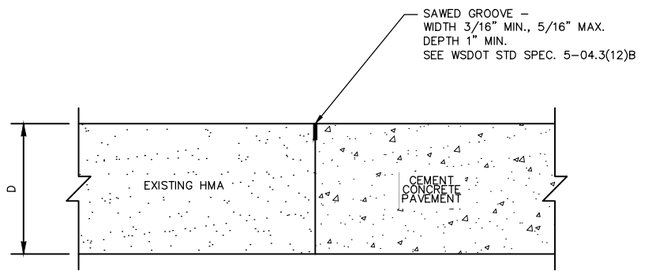

CEMENT CONCRETE PAVEMENT TO HMA TRANSVERSE JOINT

PAUL A. FERRER, STATE OF WASHINGTON, 43172, REGISTERED PROFESSIONAL ENGINEER

NO.	DATE	BY	APPR.	REVISIONS

Approved By

TRANSPORTATION DESIGN MANAGER S. COSTA DATE

PROJECT MANAGER DATE

S. HAYS
DESIGNED BY DATE
J. FRYE
DRAWN BY DATE
G. ROYCROFT
CHECKED BY DATE

City of Bellevue
TRANSPORTATION DEPARTMENT

HDR

NE SPRING BLVD - ZONE 1B
90% DESIGN

PAVING DETAILS

SHEET NAME **PVD2**

SHT 20 OF 184

90% SUBMITTAL NOT FOR CONSTRUCTION

GENERAL NOTES

1. UNLESS OTHERWISE NOTED, ALL DIMENSIONS ARE IN FEET.
2. PAINT MATERIALS, GLASS BEADS, AND INSTALLATION PER WSDOT STANDARD SPECIFICATIONS.

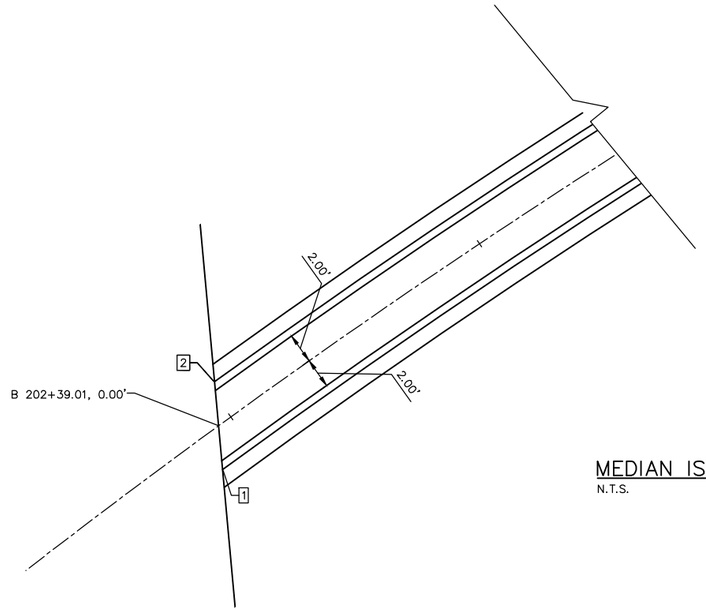

MEDIAN ISLAND DETAIL (1)
N.T.S.

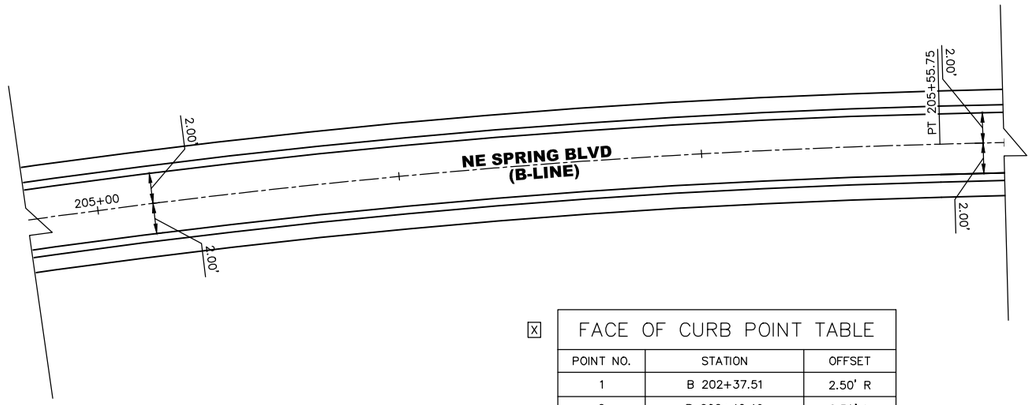

X FACE OF CURB POINT TABLE

POINT NO.	STATION	OFFSET
1	B 202+37.51	2.50' R
2	B 202+40.49	2.50' L

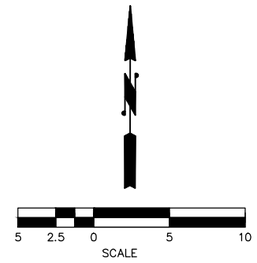

PAUL A. FERRER STATE OF WASHINGTON 43172 REGISTERED PROFESSIONAL ENGINEER

NO.	DATE	BY	APPR.	REVISIONS

Approved By

TRANSPORTATION DESIGN MANAGER S. COSTA DATE
PROJECT MANAGER DATE

S. HAYS
DESIGNED BY DATE
J. FRYE
DRAWN BY DATE
G. ROYCROFT
CHECKED BY DATE

City of Bellevue
TRANSPORTATION DEPARTMENT

HDR

NE SPRING BLVD - ZONE 1B
90% DESIGN

PAVING DETAILS

SHEET NAME PVD3

SHT 21 OF 184

GENERAL NOTES

1. UNLESS OTHERWISE NOTED, ALL DIMENSIONS ARE IN FEET.
2. PAINT MATERIALS, GLASS BEADS, AND INSTALLATION PER WSDOT STANDARD SPECIFICATIONS.

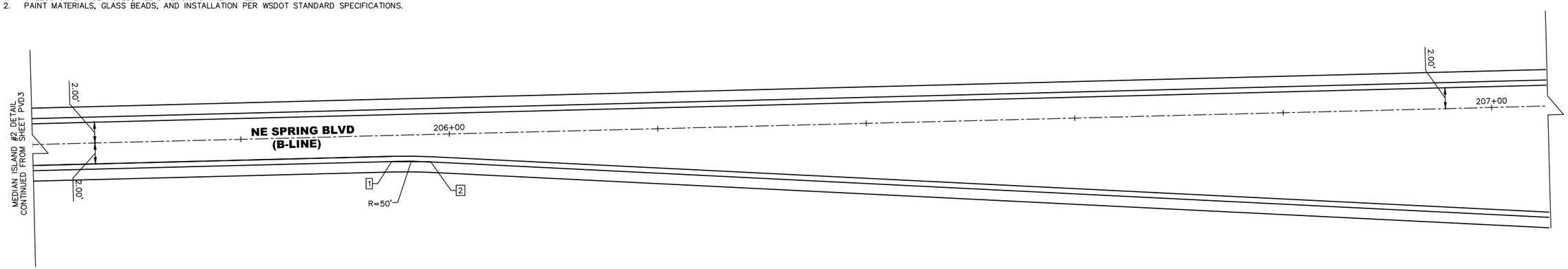

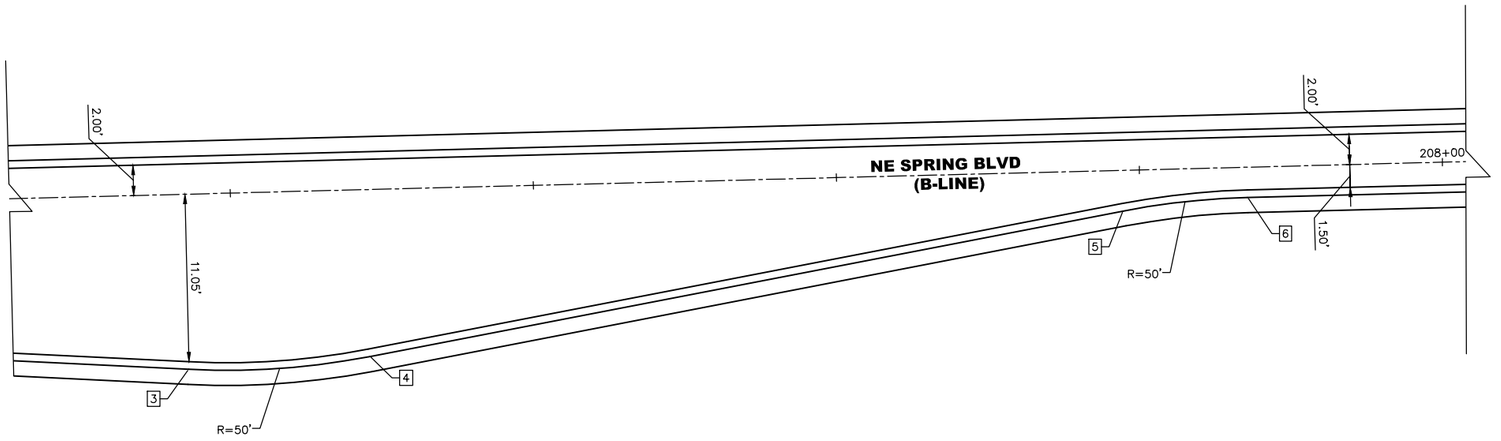

[X] FACE OF CURB POINT TABLE

POINT NO.	STATION	OFFSET
1	B 205+94.44	2.50' R
2	B 205+98.16	2.64' R
3	B 207+16.97	11.55' R
4	B 207+28.93	11.01' R
5	B 207+78.86	2.68' R
6	B 207+87.09	2.00' R
7	B 208+06.54	2.50' L
8	B 208+74.55	4.00' L
9	B 209+94.54	4.00' L
10	B 209+94.54	2.00' R

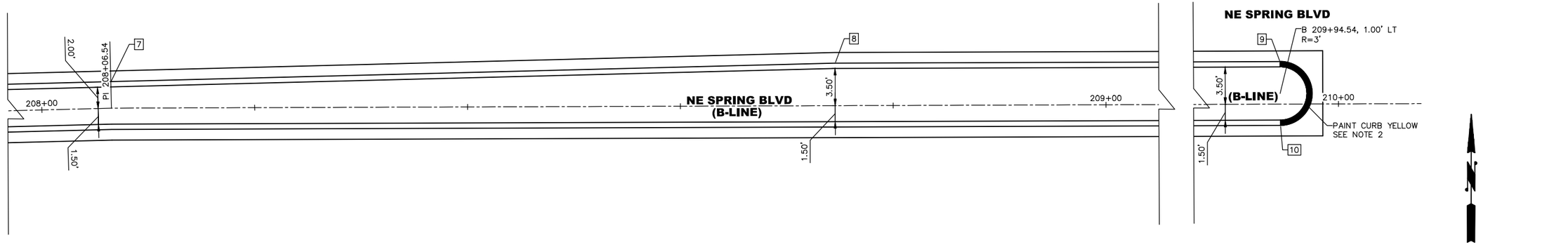

MEDIAN ISLAND DETAIL (1)
N.T.S.

5 2.5 0 5 10
SCALE

PAUL A. FERRER STATE OF WASHINGTON 43172 REGISTERED PROFESSIONAL ENGINEER

NO.	DATE	BY	APPR.	REVISIONS

Approved By

TRANSPORTATION DESIGN MANAGER S. COSTA DATE
PROJECT MANAGER DATE

S. HAYS DESIGNED BY DATE
J. FRYE DRAWN BY DATE
G. ROYCROFT CHECKED BY DATE

City of Bellevue
TRANSPORTATION DEPARTMENT

HDR

NE SPRING BLVD - ZONE 1B
90% DESIGN

PAVING DETAILS

SHEET NAME PVD4

90% SUBMITTAL NOT FOR CONSTRUCTION

SECTION 28, T. 25 N., R5E., W.M.
KING COUNTY

GENERAL NOTES:

1. UNLESS OTHERWISE NOTED, ALL DIMENSIONS AND ELEVATIONS ARE IN FEET.
2. ALL ELEVATIONS ARE FINISHED GRADE.
3. SPOT ELEVATIONS LOCATED AT FACE OF CURB ARE FLOWLINE ELEVATIONS.

CURB RETURN FLOWLINE ELEVATIONS CURB RETURN B	
PC B 209+89.57 (28.00' LT)	173.12
1/4	173.17
1/2	173.31
3/4	173.46
PT B 210+24.57 (62.78' LT)	173.62
DELTA	89°38'07"
R	35.00
L	54.76
T	34.78

CURB RAMP POINT TABLE

POINT NO.	STATION	OFFSET	ELEVATION
1	B 210+09.30	49.88' RT	172.92
2	B 210+05.40	45.54' RT	172.45
3	B 209+98.60	41.33' RT	172.46
4	B 209+92.88	39.74' RT	172.97
5	B 210+01.51	51.83' RT	173.03
6	B 209+99.40	55.23' RT	173.09
7	B 209+94.71	47.62' RT	173.06
8	B 209+92.60	51.02' RT	173.12
9	B 209+92.60	28.63' LT	173.62
10	B 209+98.82	29.25' LT	173.15
11	B 210+06.24	32.23' LT	173.22
12	B 210+11.16	36.09' LT	173.77
13	B 209+96.03	36.20' LT	173.74
14	B 209+94.53	39.92' LT	173.79
15	B 210+03.45	39.19' LT	173.82
16	B 210+01.96	42.90' LT	173.89
17	B 210+17.65	42.96' LT	173.87
18	B 210+21.23	48.09' LT	173.45
19	B 210+23.79	55.67' LT	173.54
20	B 210+24.05	61.91' LT	174.10

CURB RAMP POINT TABLE

POINT NO.	STATION	OFFSET	ELEVATION
21	B 210+14.13	50.49' LT	174.04
22	B 210+10.34	51.77' LT	174.09
23	B 210+16.69	58.07' LT	174.16
24	B 210+12.90	59.35' LT	174.22
25	B 210+17.91	68.51' RT	172.76
26	B 210+17.05	62.37' RT	172.33
27	B 210+14.74	56.83' RT	172.38
28	B 210+10.99	51.89' RT	172.91
29	B 210+10.12	65.25' RT	172.91
30	B 210+07.82	59.71' RT	172.97
31	B 210+04.13	61.25' RT	173.04
32	B 210+06.43	66.79' RT	172.96
33	B 210+86.06	61.00' LT	174.39
34	B 210+85.52	55.00' LT	173.85
35	B 210+85.47	47.00' LT	173.78
36	B 210+85.93	41.00' LT	173.73
37	B 210+93.02	55.00' LT	174.41
38	B 210+97.02	55.00' LT	174.45
39	B 210+92.97	47.00' LT	174.29
40	B 210+96.97	46.97' LT	174.34

CURB RETURN FLOWLINE ELEVATIONS CURB RETURN A	
PC B 209+83.70 (38.00' RT)	172.61
1/4	172.46
1/2	172.43
3/4	172.36
PT B 210+18.70 (73.22' RT)	172.22
DELTA	90°21'53"
R	35.00
L	55.20
T	35.22

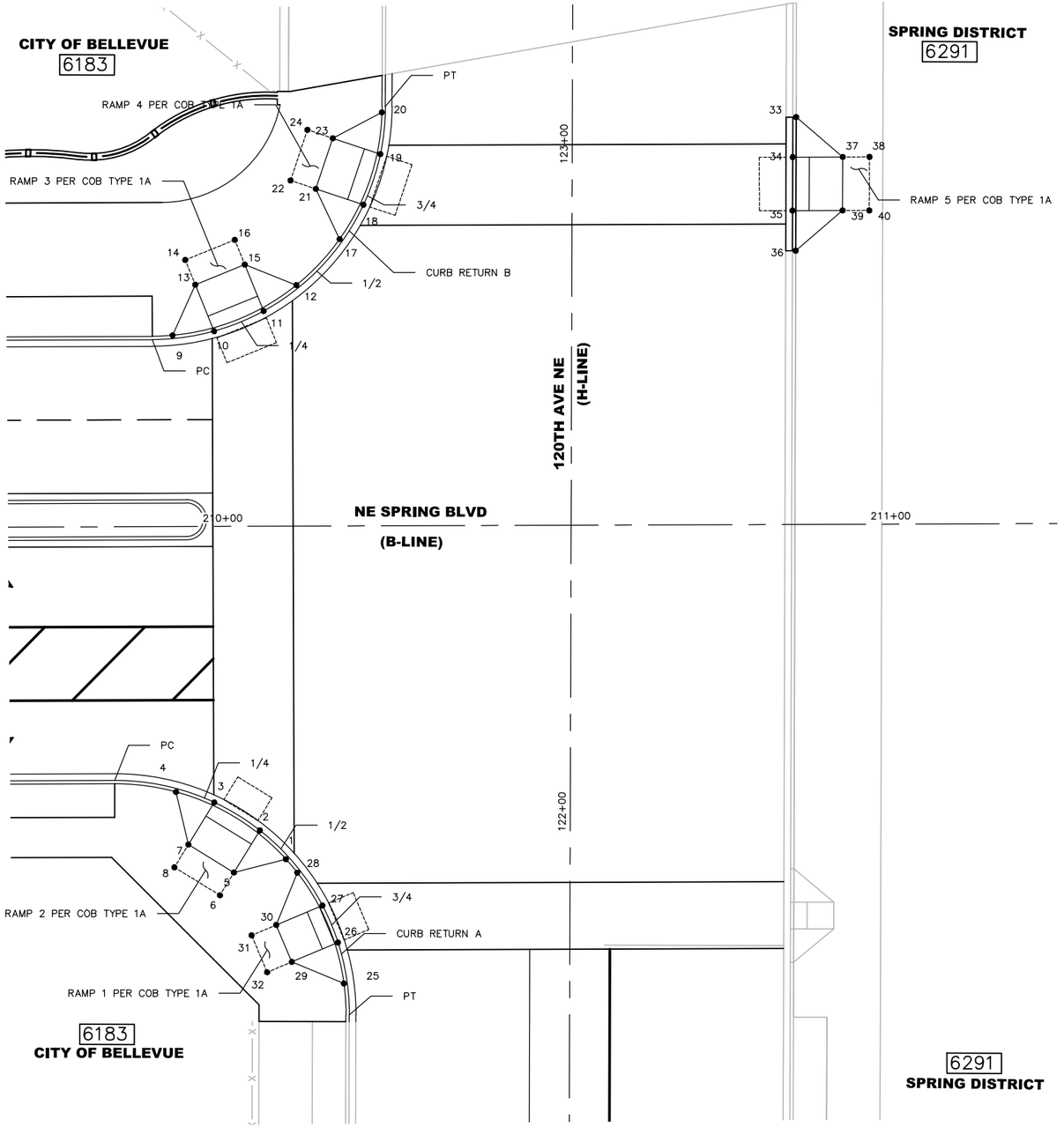

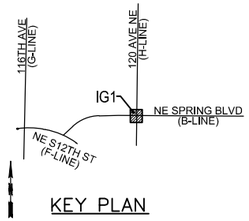

KEY PLAN

6183
CITY OF BELLEVUE

6291
SPRING DISTRICT

SCALE 10 5 0 10 20

PAUL A. FERRIER — STATE OF WASHINGTON — 43172 — REGISTERED PROFESSIONAL ENGINEER

NO.	DATE	BY	APPR.	REVISIONS

Approved By

TRANSPORTATION DESIGN MANAGER — DATE
S. COSTA
PROJECT MANAGER — DATE

S. BARTON — DESIGNED BY — DATE
J. FRYE — DRAWN BY — DATE
G. ROYCROFT — CHECKED BY — DATE

City of Bellevue
TRANSPORTATION DEPARTMENT

HDR

NE SPRING BLVD - ZONE 1B
90% DESIGN

INTERSECTION GRADING PLAN
NE SPRING BLVD/120TH AVE NE

SHEET NAME **IG1**

SHT 23 OF 184

SECTION 28, T. 25 N., R5E., W.M.
KING COUNTY

90% SUBMITTAL NOT FOR CONSTRUCTION

GENERAL NOTES:

1. UNLESS OTHERWISE NOTED ALL DIMENSIONS ARE IN FEET.
2. THESE TESC DRAWINGS ARE CONCEPTUAL AND REPRESENT A TESC AND TEMPORARY DRAINAGE SYSTEM THAT COULD BE PROVIDED BY THE CONTRACTOR DURING CONSTRUCTION, GENERALLY DEFINED AS THE WORK SPANNING FROM INITIAL SURFACE DISTURBANCE THROUGH COMPLETION OF THE PROJECT.
3. THE CONTRACTOR IS RESPONSIBLE FOR DEVELOPING AND IMPLEMENTING A CONTRACTOR-PREPARED TESC PLAN AND CONSTRUCTION STORMWATER POLLUTION PREVENTION PLAN (CSWPPP) WHICH INCLUDES AN EROSION AND SEDIMENT CONTROL PLAN (CESCP) IN ACCORDANCE WITH CITY OF BELLEVUE CLEARING AND GRADING DEVELOPMENT STANDARDS AND APPENDICES. THIS PLAN MUST BE REVIEWED AND APPROVED BY CITY OF BELLEVUE AND IS TO BE COMPLETE AND IMPLEMENTED PRIOR TO ANY GROUND DISTURBING ACTIVITIES.
4. STORM DRAIN INLET PROTECTION SHOWN FOR BOTH EXISTING AND PROPOSED CATCH BASINS. PROTECTION IS REQUIRED AT ALL TIMES FOR FUNCTIONING CATCH BASINS.
5. CONSTRUCTION STAGING AREAS SHALL BE IDENTIFIED BY THE CONTRACTOR ON UPDATED TESC PLANS. CONTRACTOR SHALL STABILIZE ALL CONSTRUCTION STAGING AREAS BY IDENTIFYING AND INSTALLING BMP'S SUCH AS STABILIZED CONSTRUCTION ENTRANCE, STRAW WATTLE, SILT FENCE, AND HIGH VISIBILITY FENCE.
6. CONTRACTOR TO PROVIDE A WATER QUALITY SAMPLING AND MONITORING PLAN TO CITY OF BELLEVUE FOR REVIEW AND APPROVAL. WATER QUALITY MONITORING LOCATIONS IDENTIFIED ON THE TESC PLANS SHALL NOT BE CONSIDERED A FINAL LIST OF MONITORING LOCATIONS THE CONTRACTOR SHALL IDENTIFY ADDITIONAL MONITORING LOCATIONS OR ELIMINATE MONITORING LOCATIONS BASED ON THE MOST CURRENT CONSTRUCTION WORK PLAN AND UPDATE THE TESC PLANS.
7. BAKER TANKS SHOWN ON PLAN CAN VARY IN NUMBER BASED ON THE CONSTRUCTION ACTIVITY OCCURRING DURING THAT TIME PERIOD.
8. SEDIMENT LADEN CONSTRUCTION WATER SHALL BE PREVENTED FROM ENTERING FUTURE OIL WATER SEPARATORS (OWS).
9. RUNOFF SHALL NOT BE ALLOWED TO ENTER A BIORETENTION CELL UNTIL THE FACILITY HAS BEEN TEMPORARILY ESTABLISHED AS DEFINED BELOW AND HAS BEEN ACCEPTED BY THE ENGINEER. TEMPORARY FLOW DIVERSION MEASURES SHALL BE USED AS APPROVED BY THE ENGINEER AND SHALL BE PLACED TO AVOID DAMAGE BY VEHICULAR TRAFFIC. CURB CUTS SHALL BE SEALED WITH AN ASPHALT PLUG OR OTHER MATERIAL AS APPROVED BY THE ENGINEER. TEMPORARY FACILITY ESTABLISHMENT SHALL BE DEFINED AS:
   - FOR PLANTING INSTALLED BETWEEN 1 OCTOBER AND 31 OCTOBER THE CELL SHALL REMAIN OFF LINE FOR 3 MONTHS AFTER INITIAL ACCEPTANCE OF PLANTING.
   - FOR PLANTING INSTALLED BETWEEN 1 NOVEMBER AND 28 FEBRUARY THE CELLS SHALL REMAIN OFF LINE UNTIL THE END OF APRIL.
   - FOR PLANTING INSTALLED BETWEEN 1 MARCH AND 30 APRIL THE CELL SHELL REMIAN OFF LINE FOR 45 DAYS AFTER INITIAL ACCEPTANCE OF PLANTING.

TESC LEGEND

- – SLOPE PROTECTION: FILTER BLANKET OR BALLASTED VISQUEEN SHEETING
- – STABILIZED CONSTRUCTION ENTRANCE

STORM DRAIN INLET PROTECTION

- – EXISTING CATCH BASIN
- – PROPOSED CATCH BASIN
- – STRAW WATTLES
- – PROPOSED STORM SEWER
- – RETAINING WALL
- – HIGH VISIBILITY FENCE
- – EXISTING RIGHT OF WAY
- – TEMPORARY CONSTRUCTION EASEMENT

CONSTRUCTION NOTES:

1. STORM DRAIN INLET PROTECTION, PER C.O.B. BMP C220.
2. STRAW WATTLES, PER C.O.B. BMP C235.
5. FILTER BLANKET, PER C.O.B. BMP C122 / BALLASTED VISQUEEN SHEETING, PER C.O.B. BMP C123.
6. STABILIZED CONSTRUCTION ENTRANCE, PER C.O.B. BMP C105.
7. HIGH VISIBILITY PLASTIC FENCE, PER C.O.B. BMP C103.
8. TEMPORARY CURB, SEE PAVING DETAIL SHEET PVD1.

KEY PLAN

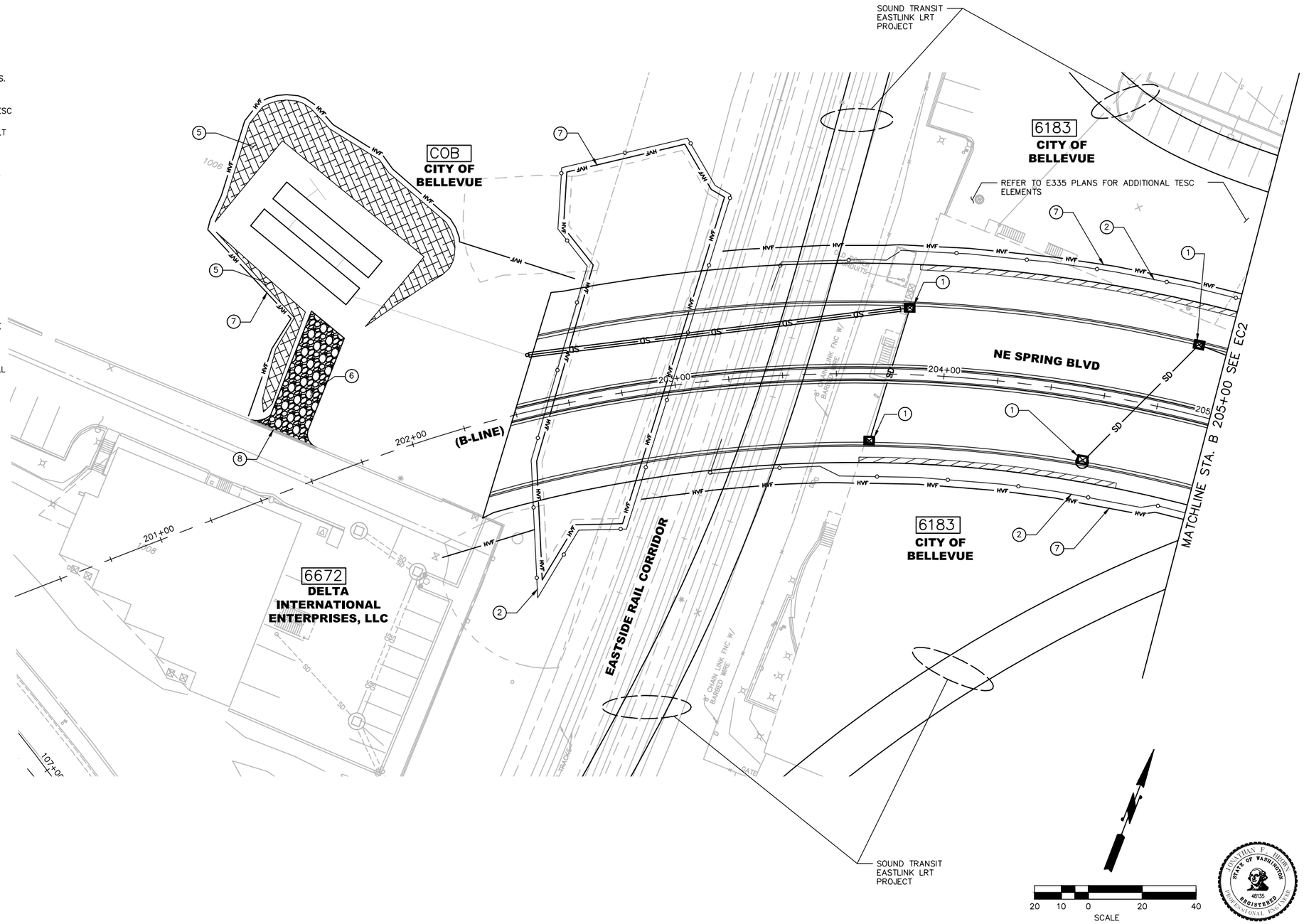

NO.	DATE	BY	APPR.	REVISIONS

Approved By

TRANSPORTATION DESIGN MANAGER — DATE

S. COSTA

PROJECT MANAGER — DATE

J. BROWN — DESIGNED BY — DATE

J. FRYE — DRAWN BY — DATE

J. VANIER — CHECKED BY — DATE

City of Bellevue
TRANSPORTATION DEPARTMENT

HDR

NE SPRING BLVD - ZONE 1B
90% DESIGN

TESC PLAN
BEGIN ZONE 1B TO STA. 205+00

SHEET NAME **EC1**

SHT 24 OF 184

90% SUBMITTAL NOT FOR CONSTRUCTION

SECTION 28, T. 25 N., R5E., W.M.
KING COUNTY

GENERAL NOTES:

1. UNLESS OTHERWISE NOTED ALL DIMENSIONS ARE IN FEET.
2. THESE TESC DRAWINGS ARE CONCEPTUAL AND REPRESENT A TESC AND TEMPORARY DRAINAGE SYSTEM THAT COULD BE PROVIDED BY THE CONTRACTOR DURING CONSTRUCTION, GENERALLY DEFINED AS THE WORK SPANNING FROM INITIAL SURFACE DISTURBANCE THROUGH COMPLETION OF THE PROJECT.
3. THE CONTRACTOR IS RESPONSIBLE FOR DEVELOPING AND IMPLEMENTING A CONTRACTOR-PREPARED TESC PLAN AND CONSTRUCTION STORMWATER POLLUTION PREVENTION PLAN (CSWPPP) WHICH INCLUDES AN EROSION AND SEDIMENT CONTROL PLAN (CESCP) IN ACCORDANCE WITH CITY OF BELLEVUE CLEARING AND GRADING DEVELOPMENT STANDARDS AND APPENDICES. THIS PLAN MUST BE REVIEWED AND APPROVED BY CITY OF BELLEVUE AND IS TO BE COMPLETE AND IMPLEMENTED PRIOR TO ANY GROUND DISTURBING ACTIVITIES.
4. STORM DRAIN INLET PROTECTION SHOWN FOR BOTH EXISTING AND PROPOSED CATCH BASINS. PROTECTION IS REQUIRED AT ALL TIMES FOR FUNCTIONING CATCH BASINS.
5. CONSTRUCTION STAGING AREAS SHALL BE IDENTIFIED BY THE CONTRACTOR ON UPDATED TESC PLANS. CONTRACTOR SHALL STABILIZE ALL CONSTRUCTION STAGING AREAS BY IDENTIFYING AND INSTALLING BMP'S SUCH AS STABILIZED CONSTRUCTION ENTRANCE, STRAW WATTLE, SILT FENCE, AND HIGH VISIBILITY FENCE.
6. CONTRACTOR TO PROVIDE A WATER QUALITY SAMPLING AND MONITORING PLAN TO CITY OF BELLEVUE FOR REVIEW AND APPROVAL. WATER QUALITY MONITORING LOCATIONS IDENTIFIED ON THE TESC PLANS SHALL NOT BE CONSIDERED A FINAL LIST OF MONITORING LOCATIONS THE CONTRACTOR SHALL IDENTIFY ADDITIONAL MONITORING LOCATIONS OR ELIMINATE MONITORING LOCATIONS BASED ON THE MOST CURRENT CONSTRUCTION WORK PLAN AND UPDATE THE TESC PLANS.
7. BAKER TANKS SHOWN ON PLAN CAN VARY IN NUMBER BASED ON THE CONSTRUCTION ACTIVITY OCCURING DURING THAT TIME PERIOD.
8. SEDIMENT LADEN CONSTRUCTION WATER SHALL BE PREVENTED FROM ENTERING FUTURE OIL WATER SEPARATORS (OWS).
9. RUNOFF SHALL NOT BE ALLOWED TO ENTER A BIORETENTION CELL UNTIL THE FACILITY HAS BEEN TEMPORARILY ESTABLISHED AS DEFINED BELOW AND HAS BEEN ACCEPTED BY THE ENGINEER. TEMPORARY FLOW DIVERSION MEASURES SHALL BE USED AS APPROVED BY THE ENGINEER AND SHALL BE PLACED TO AVOID DAMAGE BY VEHICULAR TRAFFIC. CURB CUTS SHALL BE SEALED WITH AN ASPHALT PLUG OR OTHER MATERIAL AS APPROVED BY THE ENGINEER. TEMPORARY FACILITY ESTABLISHMENT SHALL BE DEFINED AS:
   - FOR PLANTING INSTALLED BETWEEN 1 OCTOBER AND 31 OCTOBER THE CELL SHALL REMAIN OFF LINE FOR 3 MONTHS AFTER INITIAL ACCEPTANCE OF PLANTING.
   - FOR PLANTING INSTALLED BETWEEN 1 NOVEMBER AND 28 FEBRUARY THE CELLS SHALL REMAIN OFF LINE UNTIL THE END OF APRIL.
   - FOR PLANTING INSTALLED BETWEEN 1 MARCH AND 30 APRIL THE CELL SHELL REMIAN OFF LINE FOR 45 DAYS AFTER INITIAL ACCEPTANCE OF PLANTING.

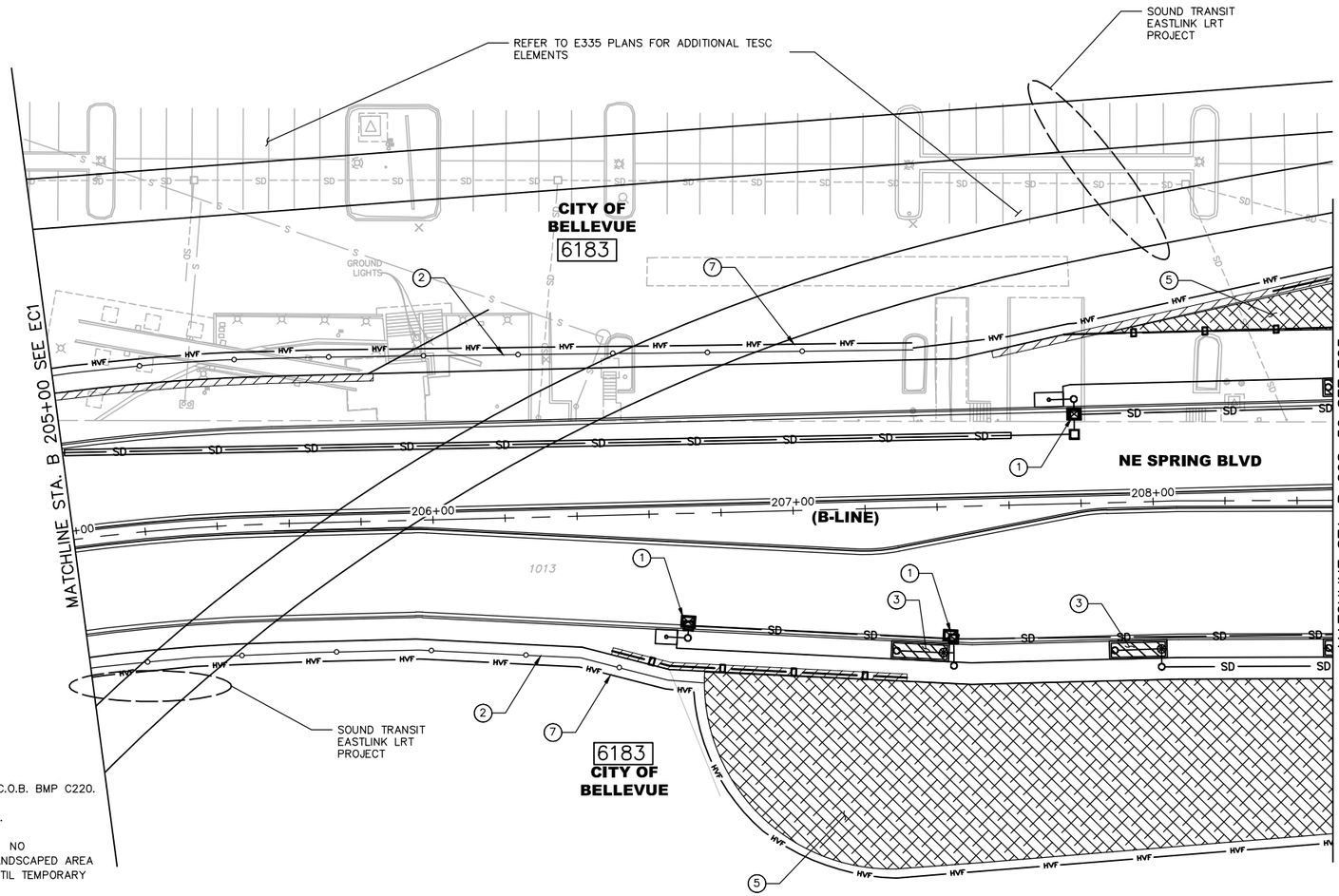

TESC LEGEND

- BIORETENTION PLANTER
- SLOPE PROTECTION: FILTER BLANKET OR BALLASTED VISQUEEN SHEETING

STORM DRAIN INLET PROTECTION

- EXISTING CATCH BASIN
- PROPOSED CATCH BASIN
- STRAW WATTLES
- SD — SD — PROPOSED STORM SEWER
- RETAINING WALL
- HVF — HVF — HIGH VISIBILITY FENCE
- EXISTING RIGHT OF WAY
- TEMPORARY CONSTRUCTION EASEMENT

CONSTRUCTION NOTES:

1. STORM DRAIN INLET PROTECTION, PER C.O.B. BMP C220.
2. STRAW WATTLES, PER C.O.B. BMP C235.
3. PROTECT FUTURE BIORETENTION CELLS. NO CONSTRUCTION WATER SHALL ENTER LANDSCAPED AREA ONCE FACILITIES ARE CONSTRUCTED UNTIL TEMPORARY ESTABLISHMENT, SEE NOTE 9 ABOVE.
5. FILTER BLANKET, PER C.O.B. BMP C122 / BALLASTED VISQUEEN SHEETING, PER C.O.B. BMP C123.
7. HIGH VISIBILITY FENCE, PER C.O.B. BMP C103.

KEY PLAN

SCALE: 20 10 0 20 40

JONATHAN F. HIGDON — STATE OF WASHINGTON — 48135 — REGISTERED PROFESSIONAL ENGINEER

NO.	DATE	BY	APPR.	REVISIONS

Approved By

TRANSPORTATION DESIGN MANAGER — DATE
S. COSTA
PROJECT MANAGER — DATE

J. BROWN — DESIGNED BY — DATE
J. FRYE — DRAWN BY — DATE
J. VANIER — CHECKED BY — DATE

City of Bellevue
TRANSPORTATION DEPARTMENT

HDR

NE SPRING BLVD - ZONE 1B
90% DESIGN

TESC PLAN
STA. B 205+00 TO STA. B 208+50

SHEET NAME: **EC2**

SHT 25 OF 184

90% SUBMITTAL NOT FOR CONSTRUCTION

SECTION 28, T. 25 N., R5E., W.M.
KING COUNTY

GENERAL NOTES:

1. UNLESS OTHERWISE NOTED ALL DIMENSIONS ARE IN FEET.
2. THESE TESC DRAWINGS ARE CONCEPTUAL AND REPRESENT A TESC AND TEMPORARY DRAINAGE SYSTEM THAT COULD BE PROVIDED BY THE CONTRACTOR DURING CONSTRUCTION, GENERALLY DEFINED AS THE WORK SPANNING FROM INITIAL SURFACE DISTURBANCE THROUGH COMPLETION OF THE PROJECT.
3. THE CONTRACTOR IS RESPONSIBLE FOR DEVELOPING AND IMPLEMENTING A CONTRACTOR-PREPARED TESC PLAN AND CONSTRUCTION STORMWATER POLLUTION PREVENTION PLAN (CSWPPP) WHICH INCLUDES AN EROSION AND SEDIMENT CONTROL PLAN (CESCP) IN ACCORDANCE WITH CITY OF BELLEVUE CLEARING AND GRADING DEVELOPMENT STANDARDS AND APPENDICES. THIS PLAN MUST BE REVIEWED AND APPROVED BY CITY OF BELLEVUE AND IS TO BE COMPLETE AND IMPLEMENTED PRIOR TO ANY GROUND DISTURBING ACTIVITIES.
4. STORM DRAIN INLET PROTECTION SHOWN FOR BOTH EXISTING AND PROPOSED CATCH BASINS. PROTECTION IS REQUIRED AT ALL TIMES FOR FUNCTIONING CATCH BASINS.
5. CONSTRUCTION STAGING AREAS SHALL BE IDENTIFIED BY THE CONTRACTOR ON UPDATED TESC PLANS. CONTRACTOR SHALL STABILIZE ALL CONSTRUCTION STAGING AREAS BY IDENTIFYING AND INSTALLING BMP'S SUCH AS STABILIZED CONSTRUCTION ENTRANCE, STRAW WATTLE, SILT FENCE, AND HIGH VISIBILITY FENCE.
6. CONTRACTOR TO PROVIDE A WATER QUALITY SAMPLING AND MONITORING PLAN TO CITY OF BELLEVUE FOR REVIEW AND APPROVAL. WATER QUALITY MONITORING LOCATIONS IDENTIFIED ON THE TESC PLANS SHALL NOT BE CONSIDERED A FINAL LIST OF MONITORING LOCATIONS THE CONTRACTOR SHALL IDENTIFY ADDITIONAL MONITORING LOCATIONS OR ELIMINATE MONITORING LOCATIONS BASED ON THE MOST CURRENT CONSTRUCTION WORK PLAN AND UPDATE THE TESC PLANS.
7. BAKER TANKS SHOWN ON PLAN CAN VARY IN NUMBER BASED ON THE CONSTRUCTION ACTIVITY OCCURING DURING THAT TIME PERIOD.
8. SEDIMENT LADEN CONSTRUCTION WATER SHALL BE PREVENTED FROM ENTERING FUTURE OIL WATER SEPARATORS (OWS).
9. RUNOFF SHALL NOT BE ALLOWED TO ENTER A BIORETENTION CELL UNTIL THE FACILITY HAS BEEN TEMPORARILY ESTABLISHED AS DEFINED BELOW AND HAS BEEN ACCEPTED BY THE ENGINEER. TEMPORARY FLOW DIVERSION MEASURES SHALL BE USED AS APPROVED BY THE ENGINEER AND SHALL BE PLACED TO AVOID DAMAGE BY VEHICULAR TRAFFIC. CURB CUTS SHALL BE SEALED WITH AN ASPHALT PLUG OR OTHER MATERIAL AS APPROVED BY THE ENGINEER. TEMPORARY FACILITY ESTABLISHMENT SHALL BE DEFINED AS:
   - FOR PLANTING INSTALLED BETWEEN 1 OCTOBER AND 31 OCTOBER THE CELL SHALL REMAIN OFF LINE FOR 3 MONTHS AFTER INITIAL ACCEPTANCE OF PLANTING.
   - FOR PLANTING INSTALLED BETWEEN 1 NOVEMBER AND 28 FEBRUARY THE CELLS SHALL REMAIN OFF LINE UNTIL THE END OF APRIL.
   - FOR PLANTING INSTALLED BETWEEN 1 MARCH AND 30 APRIL THE CELL SHELL REMIAN OFF LINE FOR 45 DAYS AFTER INITIAL ACCEPTANCE OF PLANTING.

TESC LEGEND

- BIORETENTION PLANTER
- SLOPE PROTECTION: FILTER BLANKET OR BALLASTED VISQUEEN SHEETING
- BAKER TANK SETUP AREA
- STABILIZED CONSTRUCTION ENTRANCE

STORM DRAIN INLET PROTECTION

- EXISTING CATCH BASIN
- PROPOSED CATCH BASIN
- STRAW WATTLES
- PROPOSED STORM SEWER
- RETAINING WALL
- HIGH VISIBILITY FENCE
- EXISTING RIGHT OF WAY
- TEMPORARY CONSTRUCTION EASEMENT

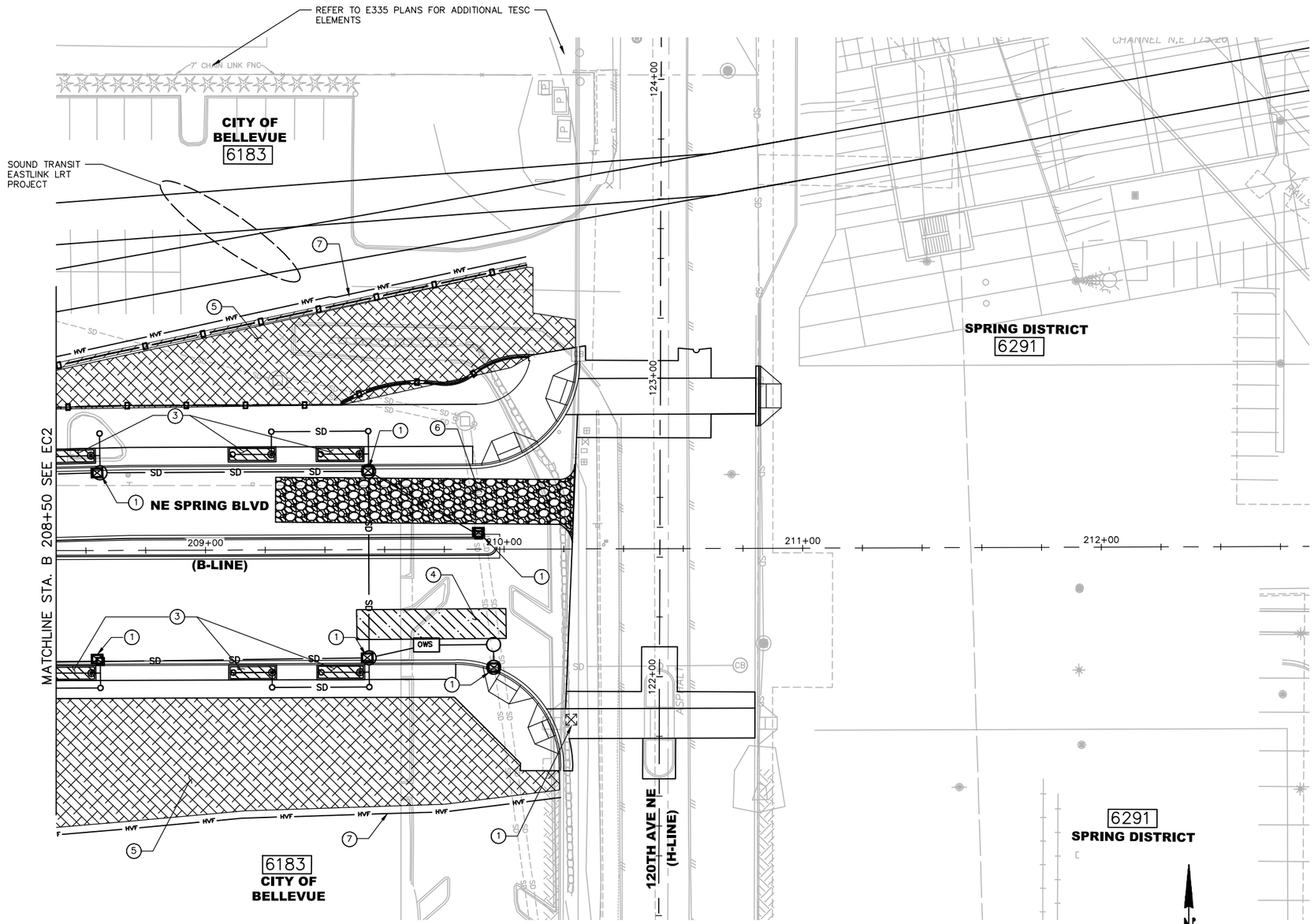

CONSTRUCTION NOTES:

1. STORM DRAIN INLET PROTECTION, PER C.O.B. BMP C220.
3. PROTECT FUTURE BIORETENTION CELLS. NO CONSTRUCTION WATER SHALL ENTER LANDSCAPED AREA ONCE FACILITIES ARE CONSTRUCTED UNTIL TEMPORARY ESTABLISHMENT, SEE NOTE 9 ABOVE.
4. APPROXIMATE BAKER TANK SETUP AREA. ADJUST NUMBER OF TANKS AS NEEDED TO ACCOUNT FOR DISTURBED AREA AND ADJUST LOCATION AS NEEDED TO ALLOW THROUGH TRAFFIC.
5. FILTER BLANKET, PER C.O.B. BMP C122 / BALLASTED VISQUEEN SHEETING, PER C.O.B. BMP C123.
6. STABILIZED CONSTRUCTION ENTRANCE, PER C.O.B. BMP C105.
7. HIGH VISIBILITY PLASTIC FENCE, PER C.O.B. BMP C-103.

KEY PLAN

SCALE 20 10 0 20 40

JONATHAN F. OLCHA STATE OF WASHINGTON 48135 REGISTERED PROFESSIONAL ENGINEER

NO.	DATE	BY	APPR.	REVISIONS

Approved By

TRANSPORTATION DESIGN MANAGER S. COSTA DATE

PROJECT MANAGER DATE

J. BROWN DESIGNED BY DATE
J. FRYE DRAWN BY DATE
J. VANIER CHECKED BY DATE

City of Bellevue
TRANSPORTATION DEPARTMENT

HDR

NE SPRING BLVD - ZONE 1B
90% DESIGN

TESC PLAN
STA. B 208+50 TO END OF ZONE 1B

SHEET NAME **EC3**

SHT 26 OF 184

SECTION 28, T. 25 N., R5E., W.M.
KING COUNTY

90% SUBMITTAL NOT FOR CONSTRUCTION

GENERAL NOTES:

1. UNLESS OTHERWISE NOTED, ALL DIMENSIONS ARE IN FEET.
2. SEE SHEETS DRP1 THROUGH DRP2 FOR DRAINAGE PROFILES.
3. ALL SD PIPE SHALL BE PVC, UNLESS OTHERWISE NOTED ON PLANS AND PROFILES.
4. STATION AND OFFSETS PROVIDED FOR STRUCTURES REFERENCE CENTER OF STRUCTURE. CENTER OF GRATE EQUALS CENTER OF STRUCTURE UNLESS OTHERWISE NOTED.
5. CATCH BASIN TYPE 1 SHALL BE PER C.O.B. STD DTL D–2. CATCH BASIN TYPE 1L SHALL BE PER C.O.B. STD DTL D–3. CATCH BASIN TYPE 2 SHALL BE PER C.O.B. STD DTL D–4. STORM DRAIN CLEANOUTS SHALL BE PER C.O.B. STD DTL D–52. CONCRETE INLET SHALL BE PER C.O.B. STD DTL D–1.
6. SEE BR SHEETS FOR THE BRIDGE PIPE SUPPORT SYSTEM PLACEMENT AND ASSOCIATED DETAILS. (HANGERS, BRACES, ETC.)
7. BRIDGE FEATURES (GIRDERS, ABUTMENT, BLOCKOUTS, ETC) SHOWN FOR GENERAL PRESENTATION PURPOSES ONLY. SEE BR SHEETS FOR ASSOCIATED DESIGN.
8. THE BRIDGE DRAINAGE SYSTEM ALIGNMENT MAY REQUIRE FIELD ADJUSTMENT TO ACCOMMODATE CONSTRUCTION VARIATIONS. THE CONTRACTOR SHALL CENTER THE TRUNK MAIN WITHIN THE BLOCKOUTS IN BRIDGE END DIAPHRAGM. SEE BR SHEETS FOR DETAILS.

LEGEND

- (X) CONSTRUCTION NOTE
- □ EXISTING CATCH BASIN
- ○ EXISTING MANHOLE
- ■ CATCH BASIN TYPE 1, OR CATCH BASIN TYPE 1L, OR CONCRETE INLET, SEE STRUCTURE TABLE AND CONSTRUCTION NOTES FOR TYPE.
- —SD— EXISTING STORM DRAIN
- —SD— STORM DRAIN

CONSTRUCTION NOTES:

1. INTERIM BRIDGE DOWNSPOUT SYSTEM, SEE DETAIL SHEETS BRW35 AND DT5
2. INTERIM DETENTION TANK SYSTEM, SEE DETAIL SHEET DT5
3. VANED GRATE PER C.O.B. STD. DTL. D–6. INSTALL FRAME PER C.O.B. STD. DTL. D–9

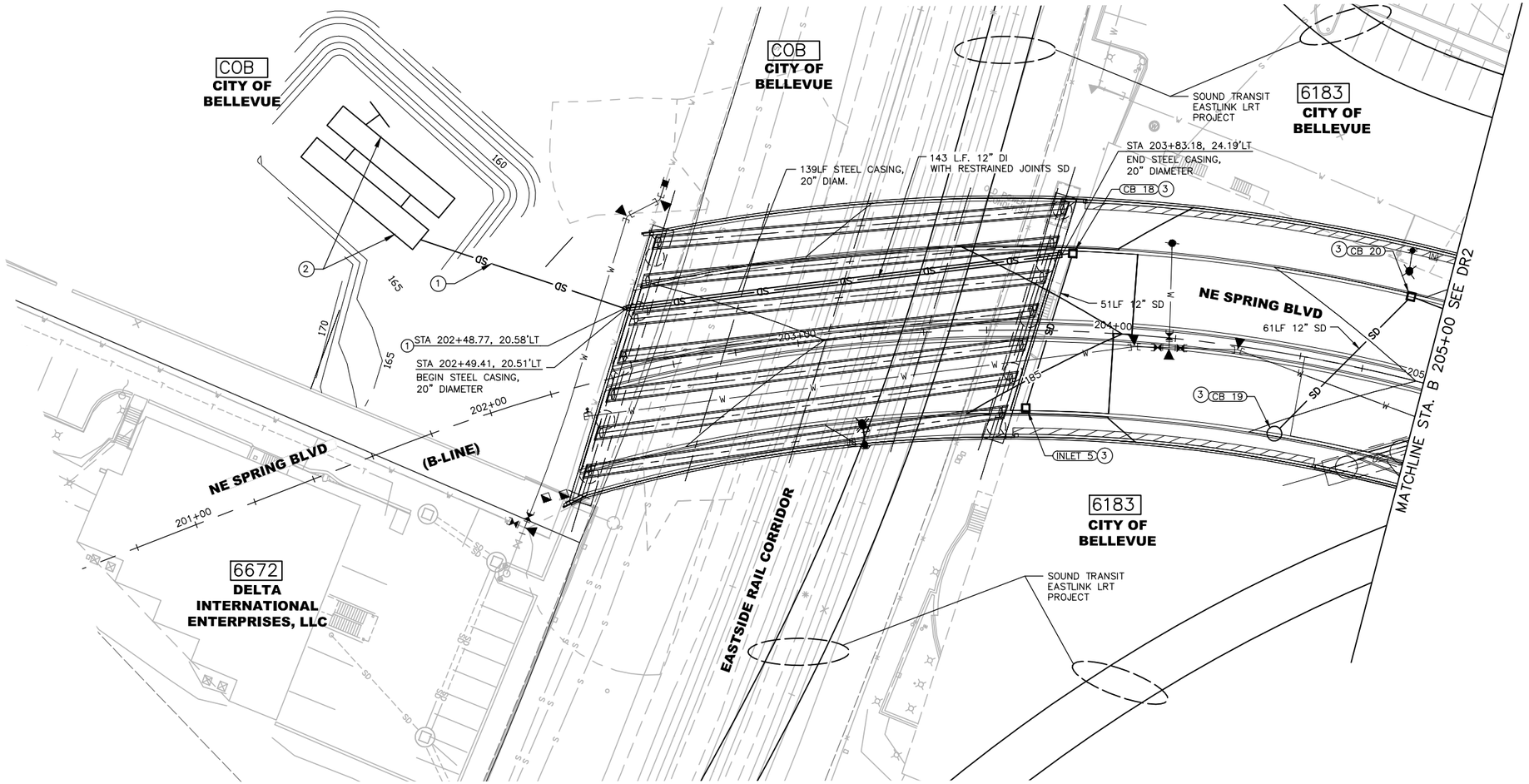

STORM STRUCTURE TABLE					
NAME	ALIGNMENT	STATION	OFFSET	RIM	REMARKS
CB 18	B	203+86.41	24.72 LT	184.68'	CATCH BASIN TYPE 1L
INLET 5	B	203+72.68	24.72 RT	184.83'	CONCRETE INLET
CB 20	B	204+89.77	25.70 LT	183.57'	CATCH BASIN TYPE 1–L
CB 19	B	204+56.02	25.66 RT	183.93'	CATCH BASIN TYPE 2 (48")

KEY PLAN

20 10 0 20 40
SCALE

JONATHAN F. HIRON STATE OF WASHINGTON 48135 REGISTERED PROFESSIONAL ENGINEER

NO.	DATE	BY	APPR.	REVISIONS

Approved By

TRANSPORTATION DESIGN MANAGER DATE
S. COSTA
PROJECT MANAGER DATE

J. BROWN
DESIGNED BY DATE
J. FRYE
DRAWN BY DATE
J. VANIER
CHECKED BY DATE

City of Bellevue
TRANSPORTATION DEPARTMENT

HDR

NE SPRING BLVD - ZONE 1B
90% DESIGN

DRAINAGE PLAN
BEGIN ZONE 1B TO STA. 205+00

SHEET NAME **DR1**

SHT 27 OF 184

90% SUBMITTAL NOT FOR CONSTRUCTION

SECTION 28, T. 25 N., R5E., W.M.
KING COUNTY

GENERAL NOTES:

1. UNLESS OTHERWISE NOTED, ALL DIMENSIONS ARE IN FEET.
2. SEE SHEETS DRP1 THROUGH DRP2 FOR DRAINAGE PROFILES.
3. ALL SD PIPE SHALL BE PVC, UNLESS OTHERWISE NOTED ON PLANS AND PROFILES.
4. STATION AND OFFSETS PROVIDED FOR STRUCTURES REFERENCE CENTER OF STRUCTURE. CENTER OF GRATE EQUALS CENTER OF STRUCTURE UNLESS OTHERWISE NOTED.
5. CATCH BASIN TYPE 1 SHALL BE PER C.O.B. STD DTL D–2. CATCH BASIN TYPE 1L SHALL BE PER C.O.B. STD DTL D–3. CATCH BASIN TYPE 2 SHALL BE PER C.O.B. STD DTL D–4. STORM DRAIN CLEANOUTS SHALL BE PER C.O.B. STD DTL D–52. CONCRETE INLET SHALL BE PER C.O.B. STD DTL D–1.
6. SEE BR SHEETS FOR THE BRIDGE PIPE SUPPORT SYSTEM PLACEMENT AND ASSOCIATED DETAILS. (HANGERS, BRACES, ETC.)
7. BRIDGE FEATURES (GIRDERS, ABUTMENT, BLOCKOUTS, ETC) SHOWN FOR GENERAL PRESENTATION PURPOSES ONLY. SEE BR SHEETS FOR ASSOCIATED DESIGN.
8. THE BRIDGE DRAINAGE SYSTEM ALIGNMENT MAY REQUIRE FIELD ADJUSTMENT TO ACCOMMODATE CONSTRUCTION VARIATIONS. THE CONTRACTOR SHALL CENTER THE TRUNK MAIN WITHIN THE BLOCKOUTS IN BRIDGE END DIAPHRAGM. SEE BR SHEETS FOR DETAILS.

LEGEND

- (X) CONSTRUCTION NOTE
- □ EXISTING CATCH BASIN
- ○ EXISTING MANHOLE
- ■ CATCH BASIN TYPE 1, OR CATCH BASIN TYPE 1L OR CONCRETE INLET, SEE STRUCTURE TABLE AND CONSTRUCTION NOTES FOR TYPE.
- ● CATCH BASIN TYPE 2, PER C.O.B. STD. DTL. D–4
- ◉ OVERFLOW STRUCTURE
- ∘ STORM DRAIN CLEANOUT
- SD EXISTING STORM DRAIN
- SD STORM DRAIN
- ▨ BIORETENTION PLANTER BOX WITH UNDERDRAIN

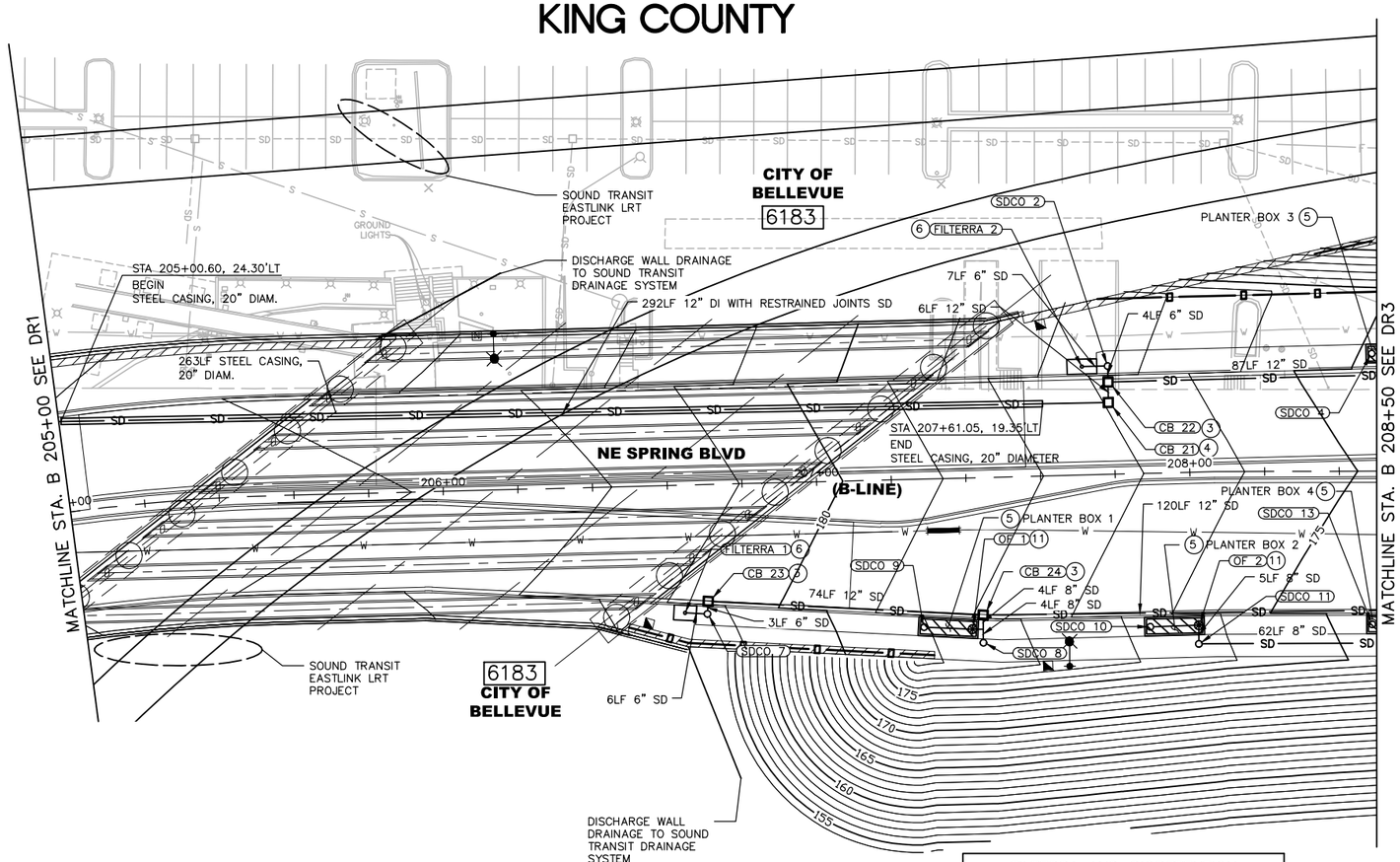

CONSTRUCTION NOTES:

(3) VANED GRATE PER C.O.B. STD. DTL. D–6. INSTALL FRAME PER C.O.B. STD. DTL. D–9
(4) SOLID COVER PER C.O.B. STD. DTL. D–22
(5) BIORETENTION PLANTER BOX, SEE DETAIL SHEETS DT2–DT4
(6) FILTERRA BIORETENTION SYSTEM, SEE DETAIL SHEET DT6
(11) OVERFLOW STRUCTURE, SEE DETAIL SHEET DT2

STORM DRAIN CLEANOUT TABLE

NAME	ALIGNMENT	STATION	OFFSET	RIM	IE	SIZE
SDCO 13	B	208+48.70	40.99 RT	173.38'	169.80	6" DIA.
SDCO 4	B	208+48.79	31.45 LT	173.59'	170.01	6" DIA.
SDCO 10	B	207+88.35	41.06 RT	175.47'	171.88	6" DIA.
SDCO 11	B	208+01.25	45.96 RT	176.35'	171.35	8" DIA.
SDCO 2	B	207+78.71	29.00 LT	177.33'	173.52	8" DIA.
SDCO 9	B	207+27.80	39.62 RT	177.76'	174.17	6" DIA.
SDCO 8	B	207+43.57	44.19 RT	178.49'	173.68	8" DIA.
SDCO 7	B	206+69.90	34.60 RT	181.20'	177.63	8" DIA.

STORM STRUCTURE TABLE

NAME	ALIGNMENT	STATION	OFFSET	RIM	REMARKS
CB 23	B	206+70.15	31.26 RT	180.67'	CATCH BASIN TYPE 1
OF 2	B	208+01.35	40.98 RT	175.40'	BIORETENTION OVERFLOW STRUCTURE
CB 22	B	207+78.71	24.72 LT	176.84'	CATCH BASIN TYPE 1
CB 21	B	207+78.64	19.22 LT	176.95'	CATCH BASIN TYPE 1
OF 1	B	207+40.78	40.48 RT	177.67'	BIORETENTION OVERFLOW STRUCTURE
CB 24	B	207+43.68	36.77 RT	177.90'	CATCH BASIN TYPE 1–L

FILTERRA AND BIORETENTION PLANTER BOX CONTROL POINT TABLE

NAME	STATION	OFFSET	ELEVATION
FILTERRA 1 END	206+67.14	32.38 RTT	181.25'
FILTERRA 1 START	206+61.08	31.94 RTT	181.44'
FILTERRA 2 END	207+75.80	27.00 LTT	177.41'
FILTERRA 2 START	207+67.80	27.00 LTT	177.71'
PLANTER BOX 1 END	207+42.46	38.03 RTT	178.43'
PLANTER BOX 1 START	207+26.51	36.84 RTT	179.05'
PLANTER BOX 2 END	208+02.85	38.50 RTT	176.18'
PLANTER BOX 2 START	207+86.85	38.50 RTT	176.77'
PLANTER BOX 3 START	208+47.36	28.91 LTT	174.90'
PLANTER BOX 4 START	208+47.20	38.50 RTT	174.67'

NOTES:
1. SEE DETAIL A ON SHEET DT2 FOR REFERENCE LOCATION FOR BIORETENTION PLANTER BOX CONTROL POINTS.
2. SEE DETAIL A ON SHEET DT6 FOR REFERENCE LOCATION FOR FILTERRA BIORETENTION SYSTEMS.

KEY PLAN

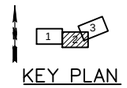

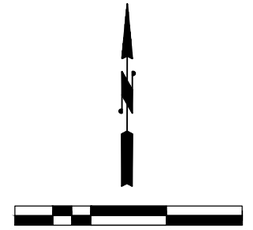

JONATHAN E. HILDA STATE OF WASHINGTON 48135 REGISTERED PROFESSIONAL ENGINEER

NO.	DATE	BY	APPR.	REVISIONS

Approved By

TRANSPORTATION DESIGN MANAGER DATE
S. COSTA
PROJECT MANAGER DATE

J. BROWN DESIGNED BY DATE
J. FRYE DRAWN BY DATE
J. VANIER CHECKED BY DATE

City of Bellevue
TRANSPORTATION DEPARTMENT

HDR

NE SPRING BLVD - ZONE 1B
90% DESIGN

DRAINAGE PLAN
STA. B 205+00 TO STA. B 208+50

SHEET NAME **DR2**

SHT 28 OF 184

SECTION 28, T. 25 N., R5E., W.M.
KING COUNTY

90% SUBMITTAL NOT FOR CONSTRUCTION

GENERAL NOTES:

1. UNLESS OTHERWISE NOTED, ALL DIMENSIONS ARE IN FEET.
2. SEE SHEETS DRP1 THROUGH DRP2 FOR DRAINAGE PROFILES.
3. ALL SD PIPE SHALL BE PVC, UNLESS OTHERWISE NOTED ON PLANS AND PROFILES.
4. STATION AND OFFSETS PROVIDED FOR STRUCTURES REFERENCE CENTER OF STRUCTURE. CENTER OF GRATE EQUALS CENTER OF STRUCTURE UNLESS OTHERWISE NOTED.
5. CATCH BASIN TYPE 1 SHALL BE PER C.O.B. STD DTL D-2. CATCH BASIN TYPE 1L SHALL BE PER C.O.B. STD DTL D-3. CATCH BASIN TYPE 2 SHALL BE PER C.O.B. STD DTL D-4. STORM DRAIN CLEANOUTS SHALL BE PER C.O.B. STD DTL D-52. CONCRETE INLET SHALL BE PER C.O.B. STD DTL D-1.

LEGEND

- (X) CONSTRUCTION NOTE
- EXISTING CATCH BASIN
- EXISTING MANHOLE
- CATCH BASIN TYPE 1, OR CATCH BASIN TYPE 1L, OR CONCRETE INLET, SEE STRUCTURE TABLE AND CONSTRUCTION NOTES FOR TYPE.
- CATCH BASIN TYPE 2
- OVERFLOW STRUCTURE
- STORM DRAIN CLEANOUT
- SD — EXISTING STORM DRAIN
- SD — STORM DRAIN
- BIORETENTION PLANTER BOX WITH UNDERDRAIN
- OWS — COALESCING PLATE OIL/WATER SEPARATOR

CONSTRUCTION NOTES:

(2) SOLID COVER PER C.O.B. STD. DTL. D-22
(3) VANED GRATE PER C.O.B. STD. DTL. D-6.
(4) INSTALL FRAME PER C.O.B. STD. DTL. D-9 SOLID COVER PER C.O.B. STD. DTL. D-22
(5) BIORETENTION PLANTER BOX, SEE DETAIL SHEETS DT2-DT4
(8) CONNECT TO 120TH AVE NE PROJECT STUB-OUT
(9) ADJUST CATCH BASIN PER C.O.B. STD. DTL D-23. SEE STRUCTURES TABLE FOR ADJUSTED RIM ELEVATION
(10) COALESCING PLATE OIL/WATER SEPARATOR, SEE DETAIL A ON SHEET DT1
(11) OVERFLOW STRUCTURE, SEE DETAIL SHEET DT2

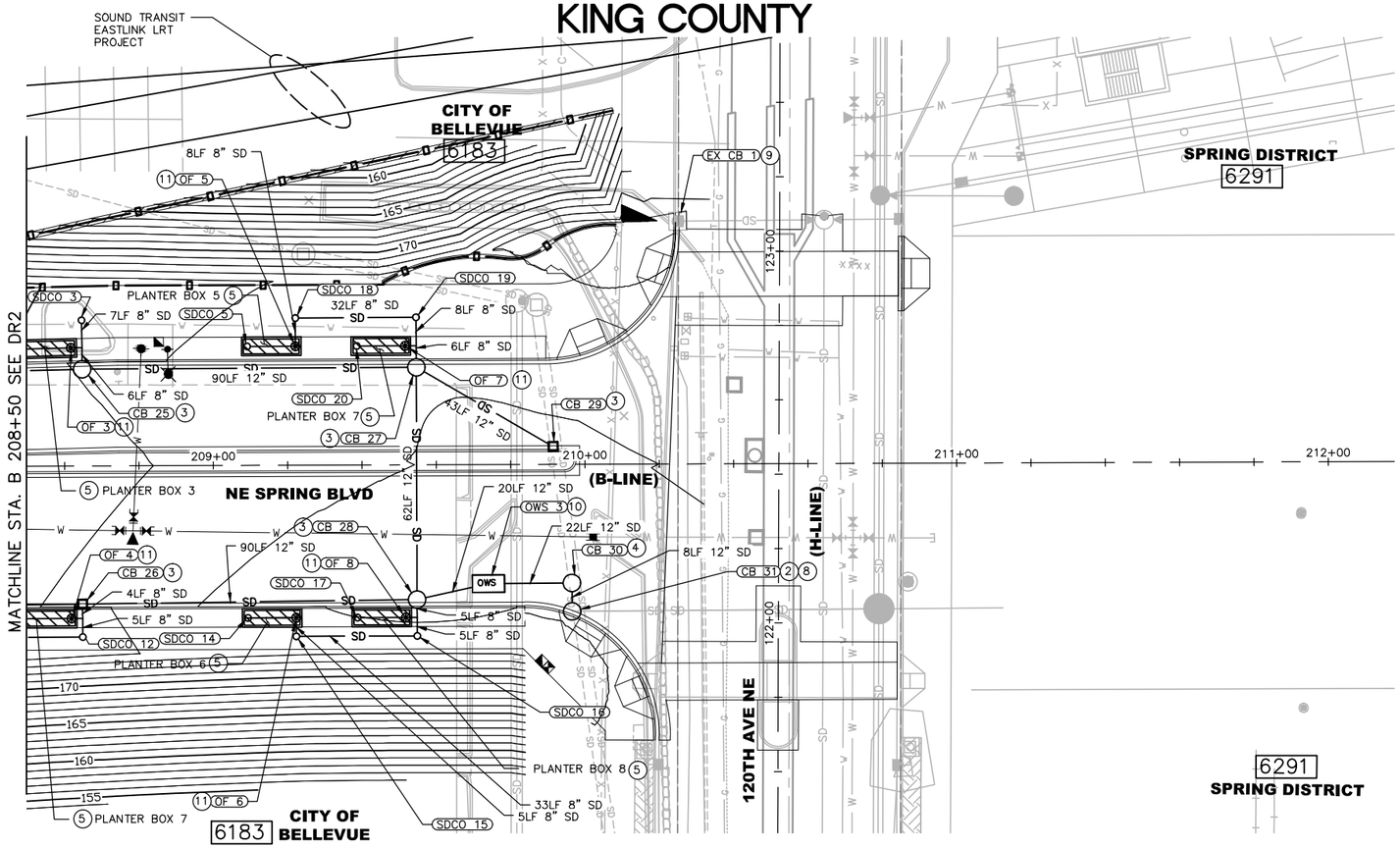

STORM DRAIN CLEANOUT TABLE

NAME	ALIGNMENT	STATION	OFFSET	RIM	IE	SIZE
SDCO 17	B	209+38.70	41.02 RT	171.72'	168.24	6" DIA.
SDCO 14	B	209+09.20	41.00 RT	172.01'	168.43	6" DIA.
SDCO 16	B	209+54.75	46.00 RT	173.06'	167.86	8" DIA.
SDCO 20	B	209+38.70	32.01 LT	172.30'	168.82	6" DIA.
SDCO 5	B	209+09.20	32.00 LT	172.49'	168.93	6" DIA.
SDCO 15	B	209+22.20	46.00 RT	173.18'	168.19	8" DIA.
SDCO 19	B	209+54.66	39.67 LT	173.68'	168.40	8" DIA.
SDCO 18	B	209+22.20	39.59 LT	173.80'	168.72	8" DIA.
SDCO 12	B	208+64.73	45.99 RT	174.30'	169.46	8" DIA.
SDCO 3	B	208+64.68	39.19 LT	174.56'	169.69	8" DIA.

STORM STRUCTURE TABLE

NAME	ALIGNMENT	STATION	OFFSET	RIM	REMARKS
EX CB 1	B	210+25.21	65.26 LT	173.85'	EXISTING STORM DRAINAGE CATCH BASIN
OF 8	B	209+51.70	41.01 RT	172.11'	BIORETENTION OVERFLOW STRUCTURE
CB 28	B	209+54.71	36.22 RT	172.46'	CATCH BASIN TYPE 2 (48"). CNTR OF GRATE AT 37.20 RT.
CB 31	B	209+96.42	39.54 RT	172.48'	CATCH BASIN TYPE 2 (48"). CNTR OF GRATE AT 40.52 RT.
OWS 3	B	209+73.93	32.00 RT	172.53'	COALESCING PLATE O/W SEPARATOR
CB 30	B	209+96.39	31.89 RT	172.56'	CATCH BASIN TYPE 2 (48")
OF 6	B	209+22.20	41.01 RT	172.24'	BIORETENTION OVERFLOW STRUCTURE
CB 29	B	209+91.46	4.80 LT	172.92'	CATCH BASIN TYPE 1-L
CB 27	B	209+54.72	26.23 LT	173.02'	CATCH BASIN TYPE 2 (48"). CNTR OF GRATE AT 27.20 LT.
OF 7	B	209+51.70	32.00 LT	172.69'	BIORETENTION OVERFLOW STRUCTURE
OF 5	B	209+22.20	31.99 LT	172.80'	BIORETENTION OVERFLOW STRUCTURE
OF 4	B	208+61.70	41.01 RT	173.44'	BIORETENTION OVERFLOW STRUCTURE
OF 3	B	208+61.76	31.77 LT	173.64'	BIORETENTION OVERFLOW STRUCTURE
CB 26	B	208+64.68	37.16 RT	173.71'	CATCH BASIN TYPE 1-L
CB 25	B	208+64.78	26.01 LT	173.93'	CATCH BASIN TYPE 2 (48"). CNTR OF GRATE AT 26.96 LT.

FILTERRA AND BIORETENTION PLANTER BOX CONTROL POINT TABLE

NAME	STATION	OFFSET	ELEVATION
PLANTER BOX 3 END	208+63.35	29.26 LTT	174.45'
PLANTER BOX 4 END	208+63.20	38.50 RTT	174.23'
PLANTER BOX 5 END	209+23.70	29.50 LTT	173.64'
PLANTER BOX 5 START	209+07.70	29.50 LTT	173.77'
PLANTER BOX 6 END	209+23.70	38.50 RTT	173.04'
PLANTER BOX 6 START	209+07.70	38.50 RTT	173.28'
PLANTER BOX 7 END	209+53.20	29.50 LTT	173.54'
PLANTER BOX 7 START	209+37.20	29.50 LTT	173.57'
PLANTER BOX 8 END	209+53.20	38.50 RTT	172.93'
PLANTER BOX 8 START	209+37.20	38.50 RTT	172.97'

NOTES:
1. SEE DETAIL A ON SHEET DT2 FOR REFERENCE LOCATION FOR BIORETENTION PLANTER BOX CONTROL POINTS.
2. SEE DETAIL A ON SHEET DT6 FOR REFERENCE LOCATION FOR FILTERRA BIORETENTION SYSTEMS.

KEY PLAN

SCALE 20 10 0 20 40

JONATHAN E. HILDA STATE OF WASHINGTON 48135 REGISTERED PROFESSIONAL ENGINEER

NO.	DATE	BY	APPR.	REVISIONS

Approved By

TRANSPORTATION DESIGN MANAGER DATE
S. COSTA
PROJECT MANAGER DATE

J. BROWN DESIGNED BY DATE
J. FRYE DRAWN BY DATE
J. VANIER CHECKED BY DATE

City of Bellevue
TRANSPORTATION DEPARTMENT

HDR

NE SPRING BLVD - ZONE 1B
90% DESIGN

DRAINAGE PLAN
STA. B 208+50 TO END ZONE 1B

SHEET NAME DR3

SHT 29 OF 184

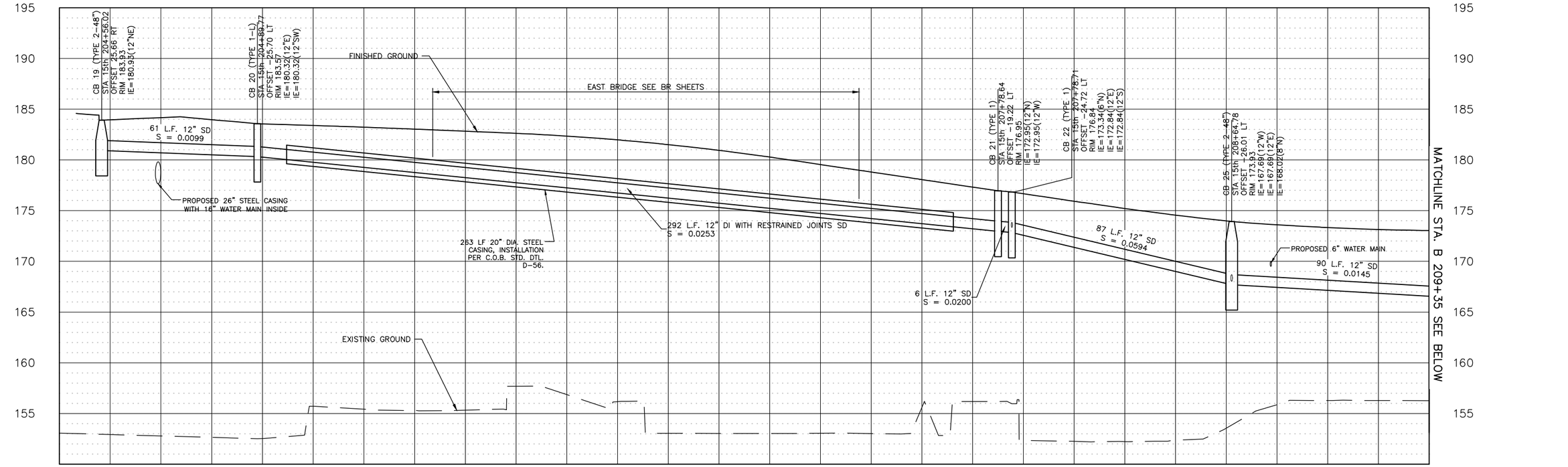

NE SPRING BLVD. STORMWATER PROFILES

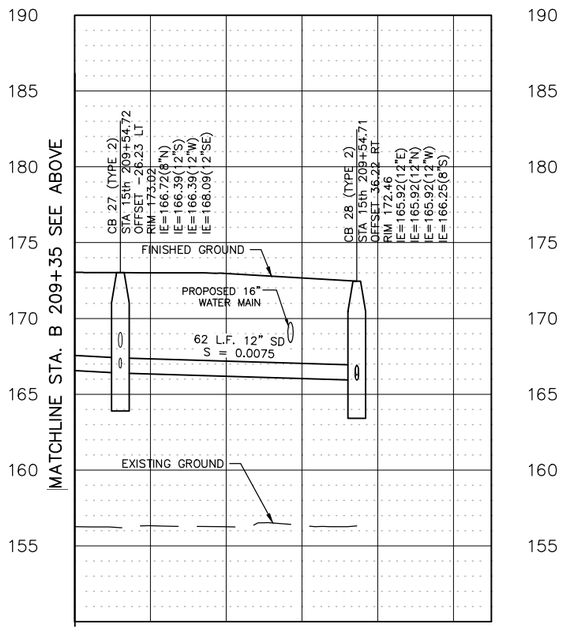

NE SPRING BLVD. STORMWATER PROFILES

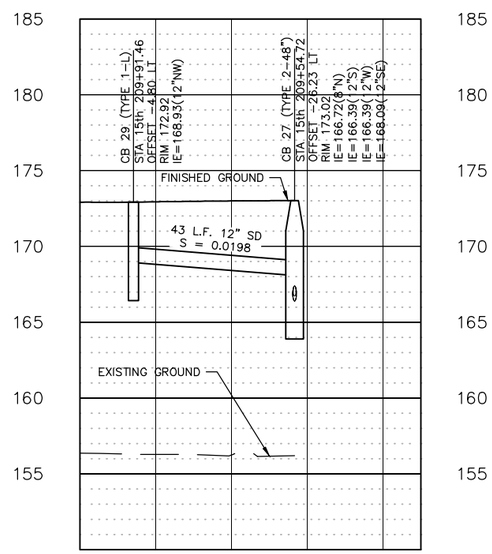

NE SPRING BLVD. STORMWATER PROFILES

GENERAL NOTES:

1. UNLESS OTHERWISE NOTED, ALL DIMENSIONS AND ELEVATIONS ARE IN FEET.
2. SEE DR SHEETS FOR PLAN.
3. PIPE LENGTHS ARE MEASURED FROM CENTER OF STRUCTURE TO CENTER OF STRUCTURE. PIPE LENGTHS AND SLOPES ARE ROUNDED AND THEREFORE REPRESENT AN APPROXIMATION.

5 0 5 10
VERTICAL SCALE IN FEET

20 0 20 40
HORIZONTAL SCALE IN FEET

JONATHAN F. BRUNA
STATE OF WASHINGTON
48135
REGISTERED
PROFESSIONAL ENGINEER

NO.	DATE	BY	APPR.	REVISIONS

Approved By

TRANSPORTATION DESIGN MANAGER DATE

S. COSTA
PROJECT MANAGER DATE

J. BROWN
DESIGNED BY DATE

J. FRYE
DRAWN BY DATE

J. VANIER
CHECKED BY DATE

City of Bellevue
TRANSPORTATION DEPARTMENT

HDR

NE SPRING BLVD - ZONE 1B
90% DESIGN

DRAINAGE PROFILES

SHEET NAME DRP1

SHT 30 OF 184

90% SUBMITTAL NOT FOR CONSTRUCTION

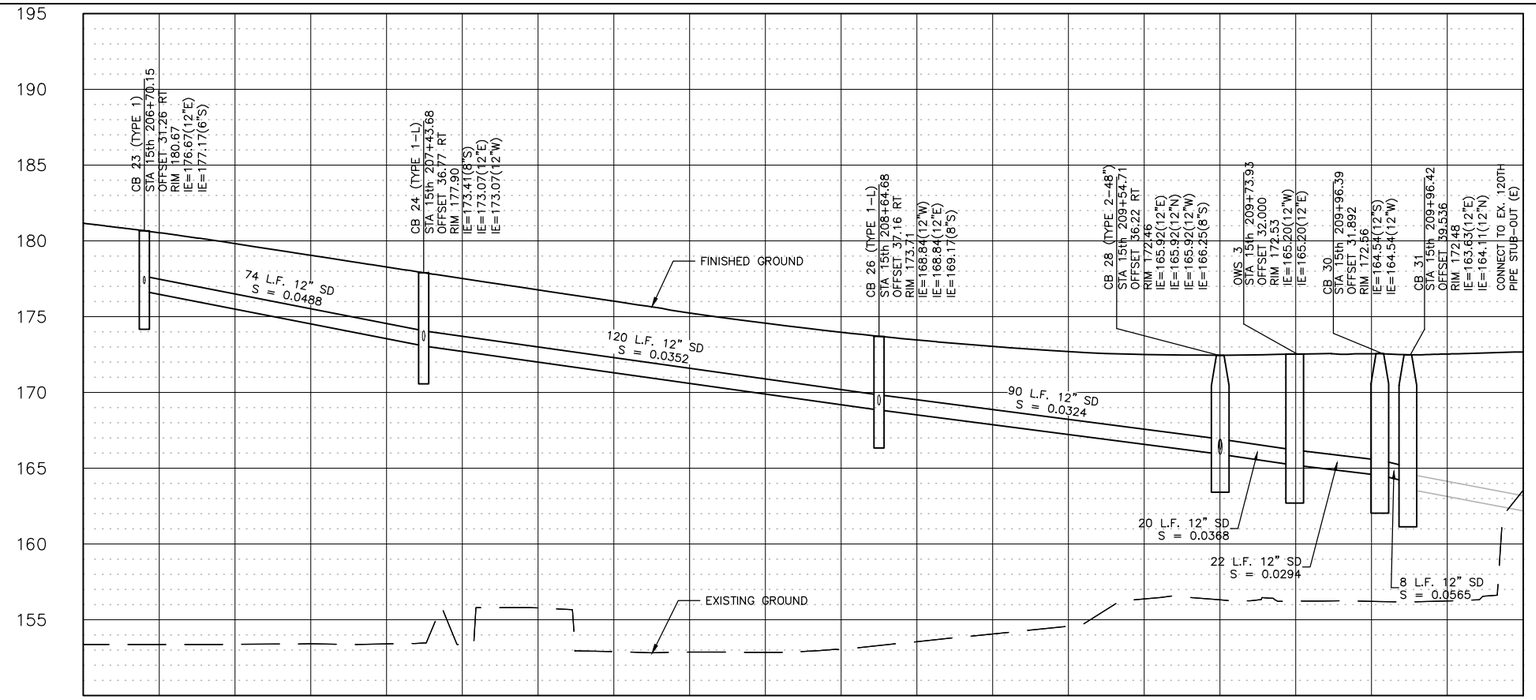

NE SPRING BLVD. STORMWATER PROFILES

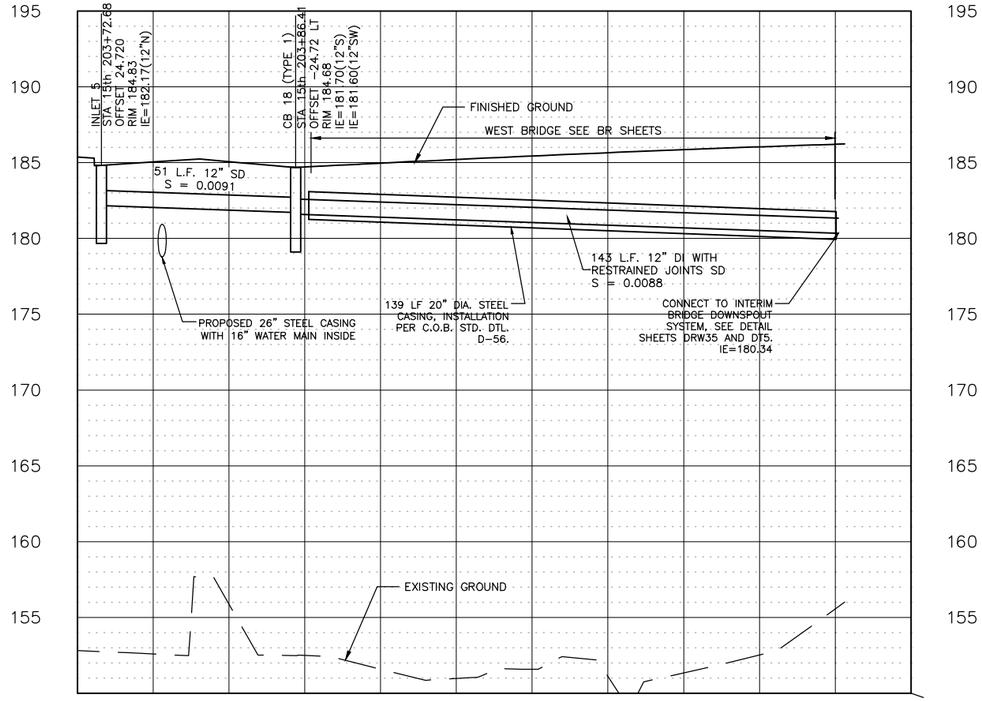

NE SPRING BLVD. STORMWATER PROFILES (SOUTH)

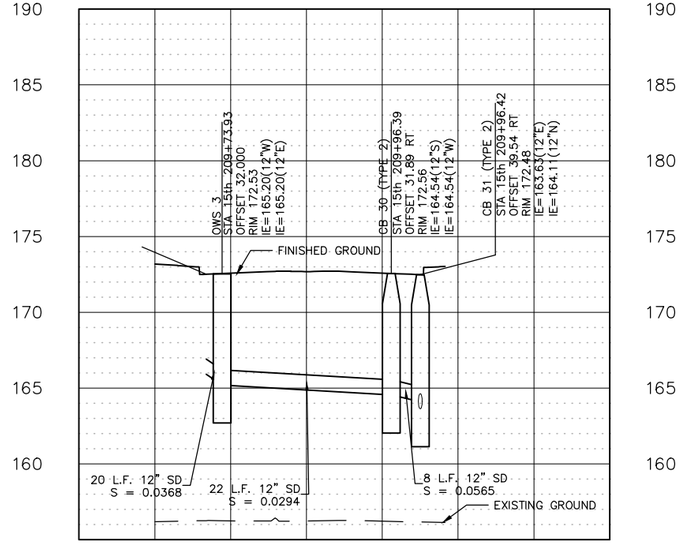

NE SPRING BLVD. STORMWATER PROFILES (LATERAL)

GENERAL NOTES:

1. UNLESS OTHERWISE NOTED, ALL DIMENSIONS AND ELEVATIONS ARE IN FEET.
2. SEE DR SHEETS FOR PLAN.
3. PIPE LENGTHS ARE MEASURED FROM CENTER OF STRUCTURE TO CENTER OF STRUCTURE. PIPE LENGTHS AND SLOPES ARE ROUNDED AND THEREFORE REPRESENT AN APPROXIMATION.

5 0 5 10 VERTICAL SCALE IN FEET

20 0 20 40 HORIZONTAL SCALE IN FEET

NO.	DATE	BY	APPR.	REVISIONS

Approved By

TRANSPORTATION DESIGN MANAGER DATE
S. COSTA
PROJECT MANAGER DATE

J. BROWN
DESIGNED BY DATE
J. FRYE
DRAWN BY DATE
J. VANIER
CHECKED BY DATE

City of Bellevue
TRANSPORTATION DEPARTMENT

HDR

NE SPRING BLVD - ZONE 1B
90% DESIGN

DRAINAGE PROFILES

SHEET NAME DRP2

SHT 31 OF 184

GENERAL NOTES:

1. UNLESS OTHERWISE NOTED, ALL DIMENSIONS ARE IN FEET.

90% SUBMITTAL NOT FOR CONSTRUCTION

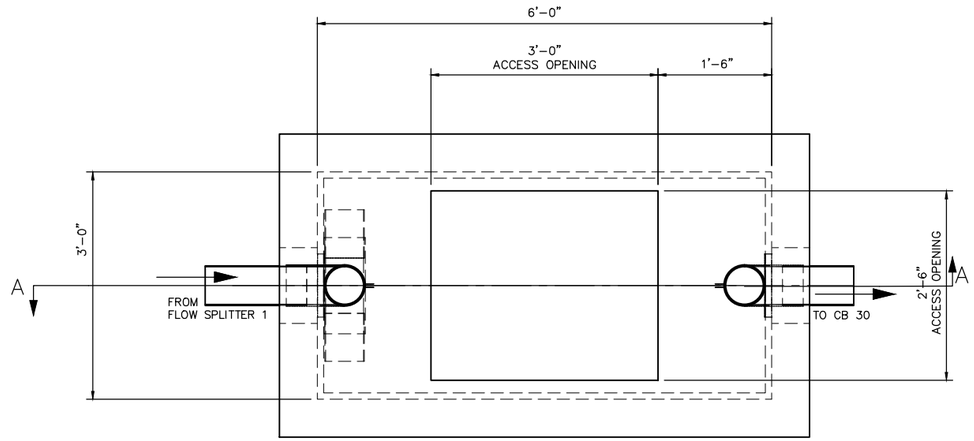

PLAN VIEW

(MEDIA NOT SHOWN FOR CLARITY)

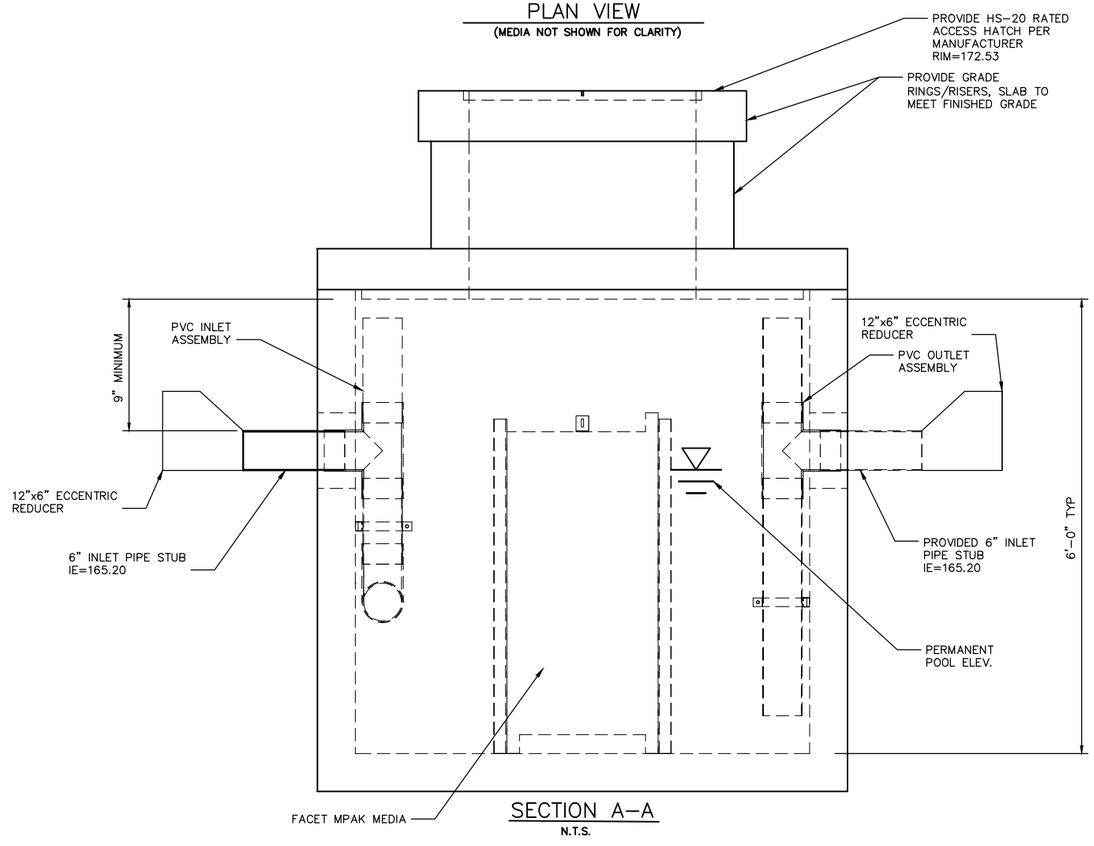

SECTION A-A

N.T.S.

COALESCING PLATE OIL WATER SEPARATOR

N.T.S.

A

NO.	DATE	BY	APPR.	REVISIONS

Approved By

TRANSPORTATION DESIGN MANAGER — DATE

S. COSTA

PROJECT MANAGER — DATE

J. BROWN — DESIGNED BY — DATE

J. FRYE — DRAWN BY — DATE

J. VANIER — CHECKED BY — DATE

City of Bellevue

TRANSPORTATION DEPARTMENT

HDR

NE SPRING BLVD - ZONE 1B
90% DESIGN

DRAINAGE DETAILS
COALESCING PLATE OIL/WATER SEPARATOR

SHEET NAME DT1

SHT 32 OF 184

GENERAL NOTES:

1. OTHERWISE NOTED, DIMENSIONS ARE IN FEET.

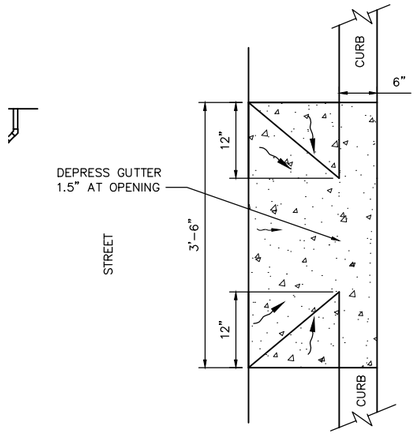

TYPICAL BIORETENTION INLET CURB CUT DETAIL (A)
N.T.S.

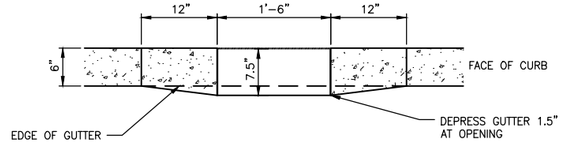

TYPICAL BIORETENTION INLET CURB CUT SECTION (B)
N.T.S.

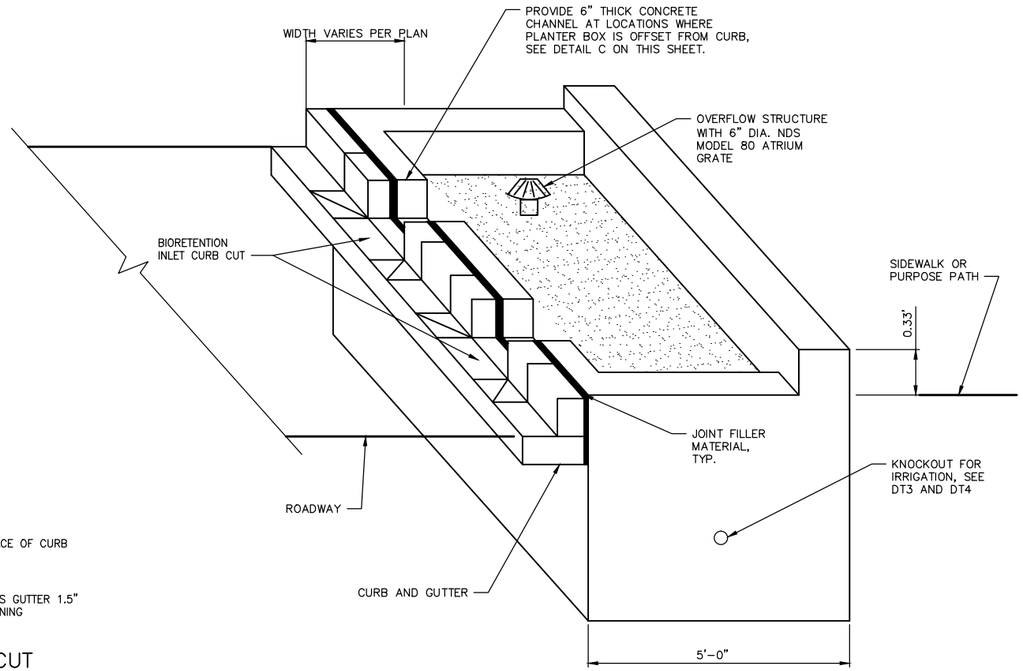

BIORETENTION PLANTER BOX ISOMETRIC VIEW (B)
N.T.S.

BIORETENTION PLANTER BOX NOTES:

1. SEE SHEET DT3 FOR PLANTER BOXES 2, 6, AND 5.
2. SEE SHEET DT4 FOR PLANTER BOXES 1, 3, 4, 7, AND 8.

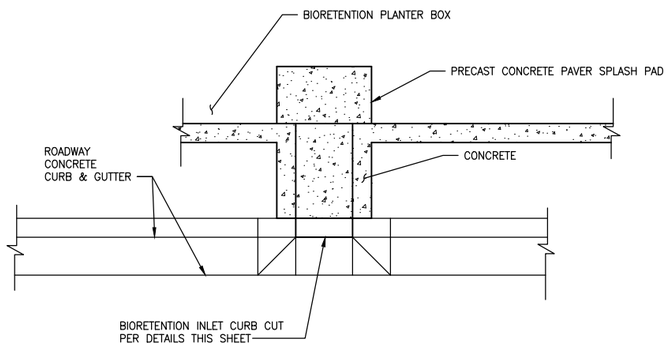

BIORETENTION INLET DETAIL
PLANTER BOX OFFSET FROM CURB (C)
N.T.S.

NO.	DATE	BY	APPR.	REVISIONS

Approved By

TRANSPORTATION DESIGN MANAGER — DATE
S. COSTA
PROJECT MANAGER — DATE

J. BROWN — DESIGNED BY — DATE
J. FRYE — DRAWN BY — DATE
J. VANIER — CHECKED BY — DATE

City of Bellevue
TRANSPORTATION DEPARTMENT

HDR

NE SPRING BLVD - ZONE 1B
90% DESIGN

DRAINAGE DETAILS
BIORETENTION

SHEET NAME DT2

SHT 33 OF 184

90% SUBMITTAL NOT FOR CONSTRUCTION

GENERAL NOTES:

1. UNLESS OTHERWISE NOTED, ALL DIMENSIONS ARE IN FEET.

BIORETENTION PLANTER BOX NOTES:

1. SEE SHEET DT3 FOR PLANTER BOXES 2, 6, AND 5.
2. SEE SHEET DT4 FOR PLANTER BOXES 1, 3, 4, 7, AND 8.
3. BIORETENTION PLANTER BOXES ON SOUTH SIDE OF NE SPRING BOULEVARD TO HAVE 3" IRRIGATION KNOCKOUTS ON BOTH SIDES OF THE PLANTER BOX. PLANTER BOXES ON THE NORTH SIDE OF NE SPRING BOULEVARD TO HAVE 1.5" KNOCKOUTS ON THE EAST SIDE OF THE PLANTER BOX ONLY.

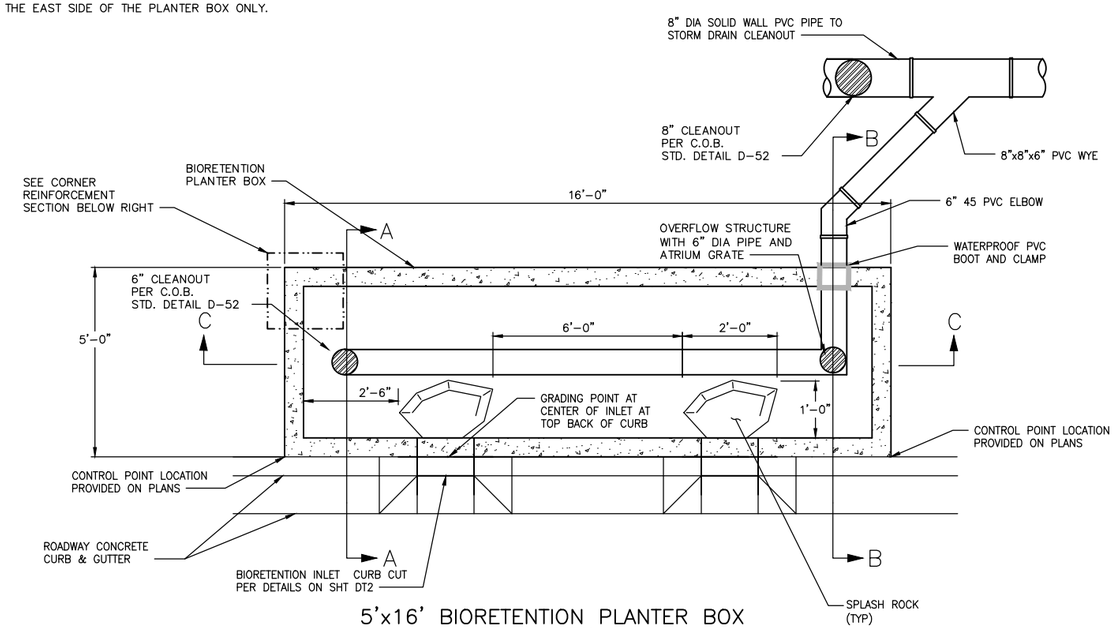

5'x16' BIORETENTION PLANTER BOX PLAN VIEW

N.T.S.

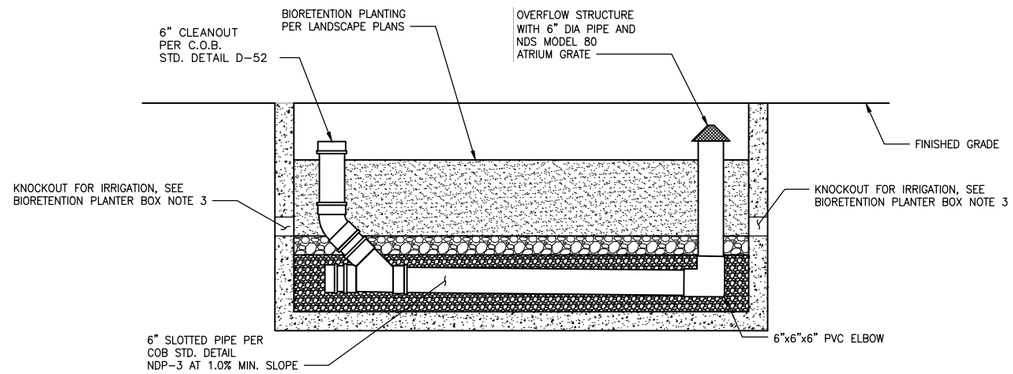

TYPICAL BIORETENTION PLANTER BOX SECTION C-C

N.T.S.

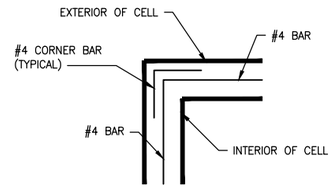

TYPICAL BIORETENTION PLANTER BOX CORNER REINFORCEMENT SECTION

N.T.S.

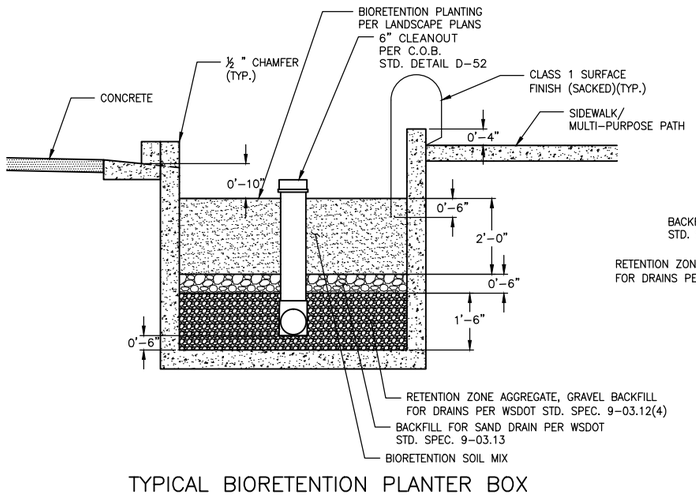

TYPICAL BIORETENTION PLANTER BOX SECTION A-A

N.T.S.

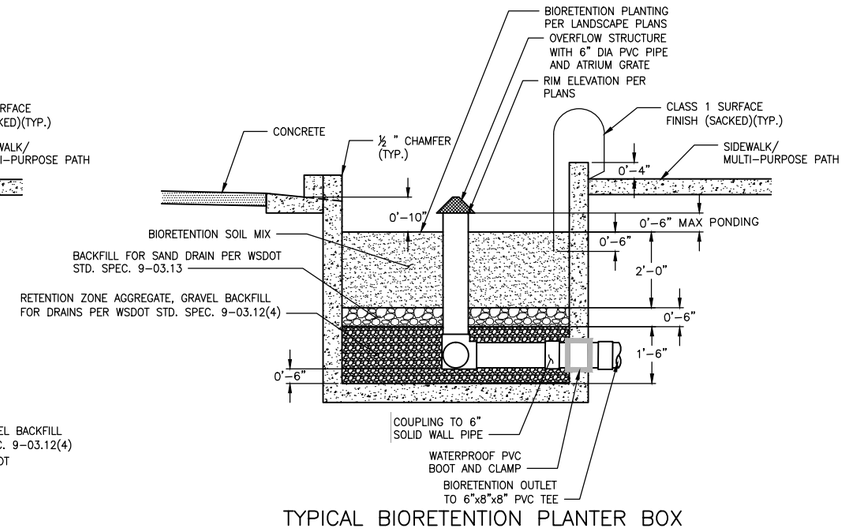

TYPICAL BIORETENTION PLANTER BOX SECTION B-B

N.T.S.

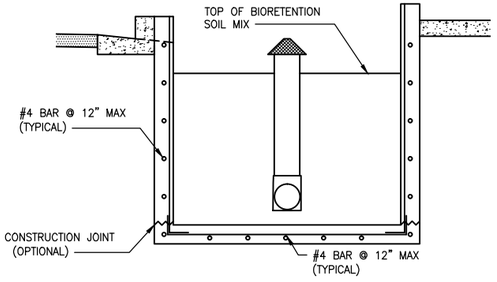

TYPICAL BIORETENTION PLANTER BOX REINFORCEMENT CROSS SECTION SECTION B-B

N.T.S.

JONATHAN E. BROWN — STATE OF WASHINGTON — 48135 — REGISTERED PROFESSIONAL ENGINEER

NO.	DATE	BY	APPR.	REVISIONS

Approved By

TRANSPORTATION DESIGN MANAGER — DATE

S. COSTA
PROJECT MANAGER — DATE

J. BROWN
DESIGNED BY — DATE

J. FRYE
DRAWN BY — DATE

J. VANIER
CHECKED BY — DATE

City of Bellevue
TRANSPORTATION DEPARTMENT

HDR

NE SPRING BLVD - ZONE 1B
90% DESIGN

DRAINAGE DETAILS
BIORETENTION

SHEET NAME DT3

SHT 34 OF 184

90% SUBMITTAL NOT FOR CONSTRUCTION

GENERAL NOTES:

1. UNLESS OTHERWISE NOTED, ALL DIMENSIONS ARE IN FEET.

BIORETENTION PLANTER BOX NOTES:

1. SEE SHEET DT3 FOR PLANTER BOXES 2, 6, AND 5.
2. SEE SHEET DT4 FOR PLANTER BOXES 1, 3, 4, 7, AND 8.
3. BIORETENTION PLANTER BOXES ON SOUTH SIDE OF NE SPRING BOULEVARD TO HAVE 3" IRRIGATION KNOCKOUTS ON BOTH SIDES OF THE PLANTER BOX. PLANTER BOXES ON THE NORTH SIDE OF NE SPRING BOULEVARD TO HAVE 1.5" KNOCKOUTS ON THE EAST SIDE OF THE PLANTER BOX ONLY.

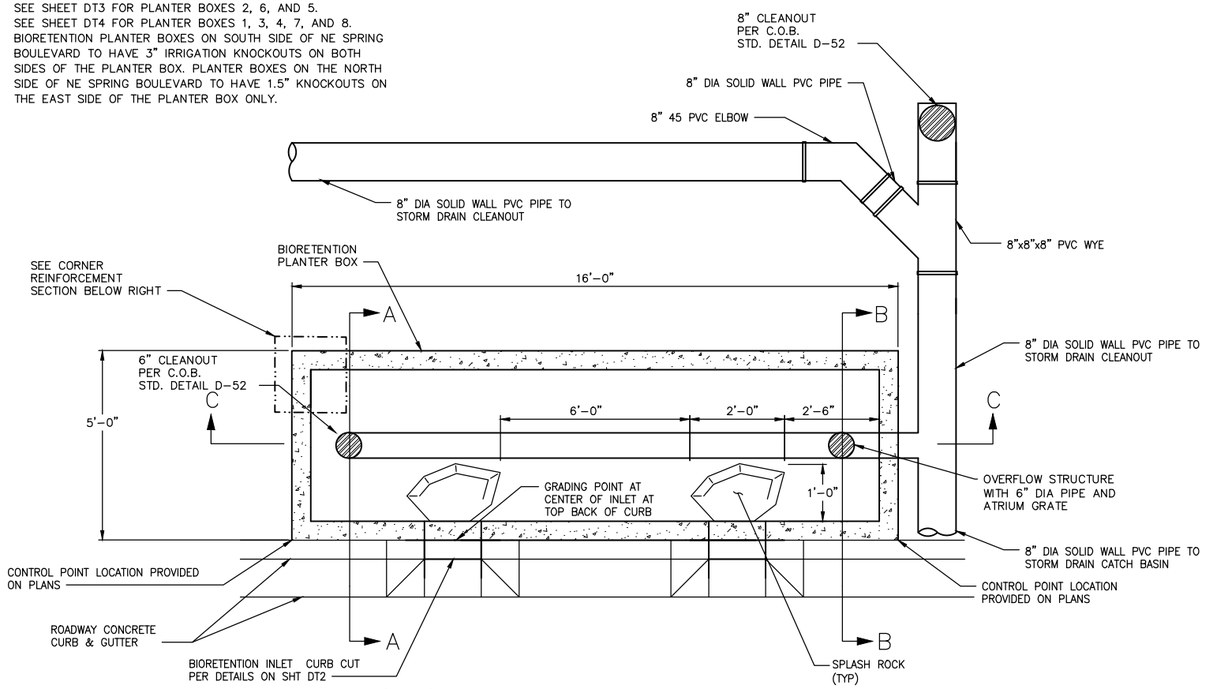

5'x16' BIORETENTION PLANTER BOX
PLAN VIEW
N.T.S.

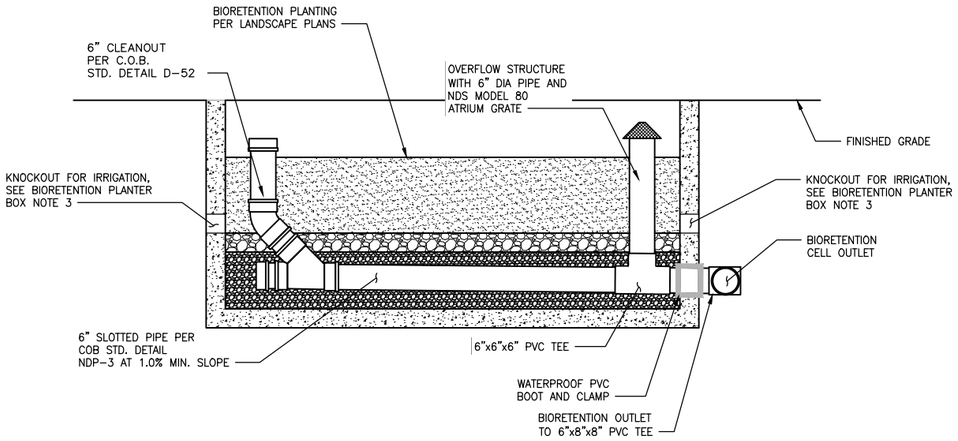

TYPICAL BIORETENTION PLANTER BOX
SECTION C-C
N.T.S.

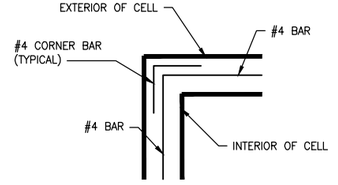

TYPICAL BIORETENTION PLANTER BOX
CORNER REINFORCEMENT SECTION
N.T.S.

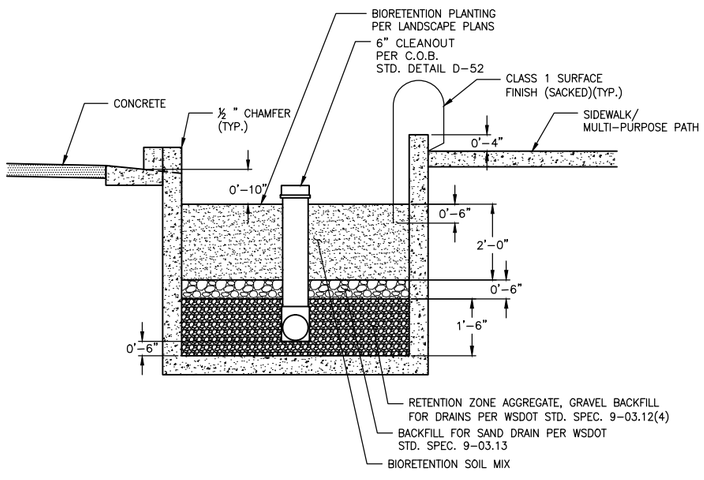

TYPICAL BIORETENTION PLANTER BOX
SECTION A-A
N.T.S.

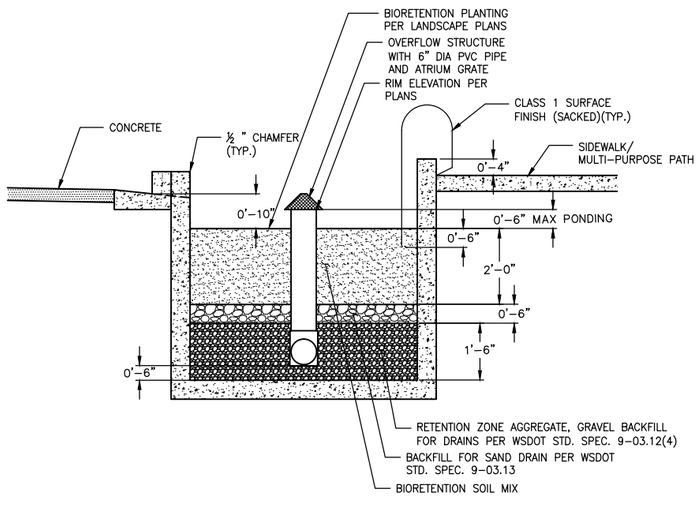

TYPICAL BIORETENTION PLANTER BOX
SECTION B-B
N.T.S.

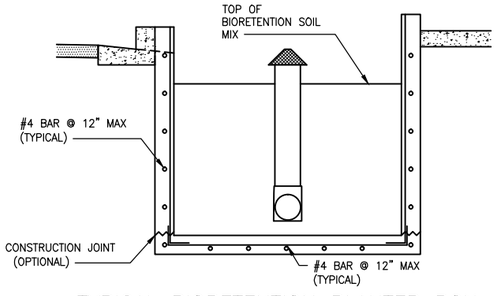

TYPICAL BIORETENTION PLANTER BOX
REINFORCEMENT CROSS SECTION
SECTION B-B
N.T.S.

JONATHAN F. REGAL — STATE OF WASHINGTON — 48135 — REGISTERED PROFESSIONAL ENGINEER

NO.	DATE	BY	APPR.	REVISIONS

Approved By

TRANSPORTATION DESIGN MANAGER — DATE
S. COSTA
PROJECT MANAGER — DATE

J. BROWN — DESIGNED BY — DATE
J. FRYE — DRAWN BY — DATE
J. VANIER — CHECKED BY — DATE

City of Bellevue
TRANSPORTATION DEPARTMENT

HDR

NE SPRING BLVD - ZONE 1B
90% DESIGN

DRAINAGE DETAILS
BIORETENTION

SHEET NAME DT4

SHT 35 OF 184

90% SUBMITTAL NOT FOR CONSTRUCTION

INTERIM DETENTION TANK SYSTEM NOTES:

1. CONFIGURATION SHOWN IS SCHEMATIC ONLY AND REPRESENTS AN INTERIM CONDITION BEFORE THE FINAL DETENTION VAULT IS BUILT AS PART OF ZONE 1A CONSTRUCTION; CONTRACTOR TO PREPARE DETENTION TANK SYSTEM PLAN FOR REVIEW AND APPROVAL BY THE ENGINEER. DETENTION TANK PLAN SHALL INCLUDE TANK LOCATIONS, SIZES, PIPING FROM THE ABUTMENT DOWNSPOUT SYSTEM, FLOW CONTROL STRUCTURE, AND DISPERSION OUTFALL SYSTEM.

2. DETENTION TANK SYSTEM (BAKER TANK OR SIMILAR) MUST PROVIDE A MINIMUM 5,370 CUBIC–FEET OF LIVE STORAGE VOLUME PLUS 6–INCHES OF FREEBOARD FROM THE MAXIMUM WATER SURFACE TO THE TOP OF THE TANK.

3. FLOW CONTROL STRUCTURE SHALL BE DESIGNED NOT TO EXCEED THE FOLLOWING RELEASE RATES DURING VARIOUS STORM EVENTS:

2–YEAR:	0.0026 CFS
5–YEAR:	0.0054 CFS
10–YEAR:	0.0082 CFS
25–YEAR:	0.0104 CFS
50–YEAR:	0.0120 CFS
100–YEAR:	0.0124 CFS

THE FLOW CONTROL STRUCTURE CONFIGURATION REPRESENTED IN DETAIL B ON THIS SHEET WILL COMPLY FOR A TANK WITH 8.5–FEET OF LIVE STORAGE DEPTH AND 5,370 CUBIC–FEET OF LIVE STORAGE VOLUME.

4. INSTALL DISPERSION OUTFALL SYSTEM ALONG CONTOUR TO EVENLY DISTRIBUTE FLOW INTO VEGETATED AREA. PROVIDE PERFORATED PIPE WITH END CAPS, OR SIMILAR, TO DISCHARGE FLOW.

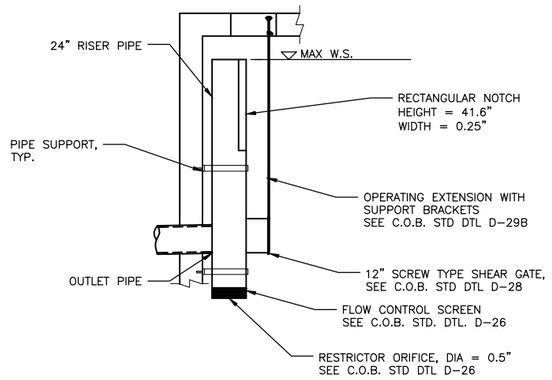

FLOW CONTROL STRUCTURE B
N.T.S.

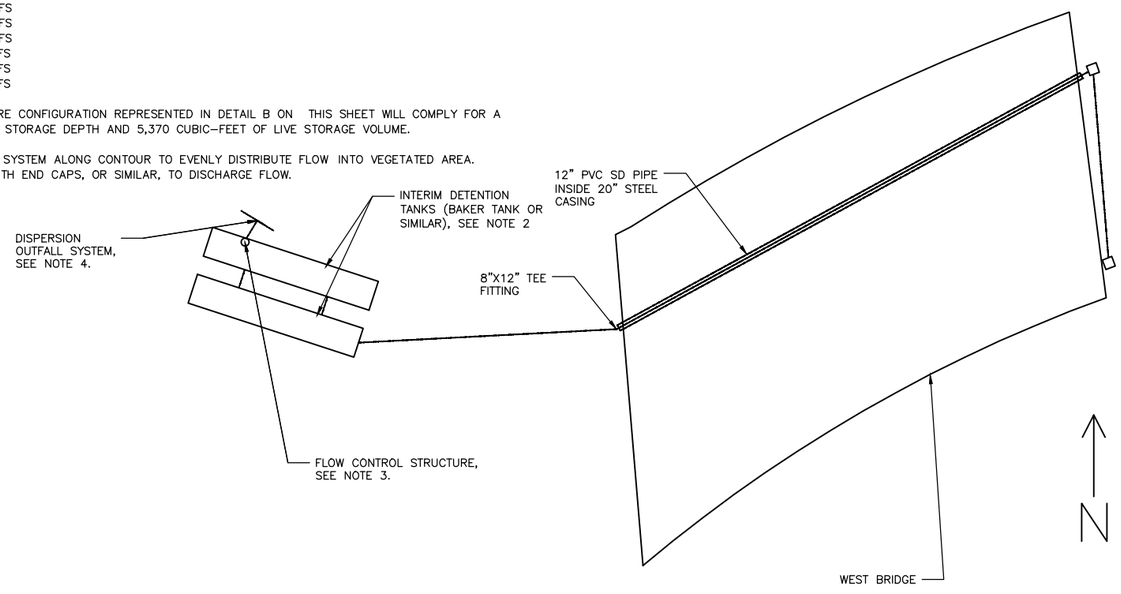

SCHEMATIC PLAN VIEW
N.T.S.

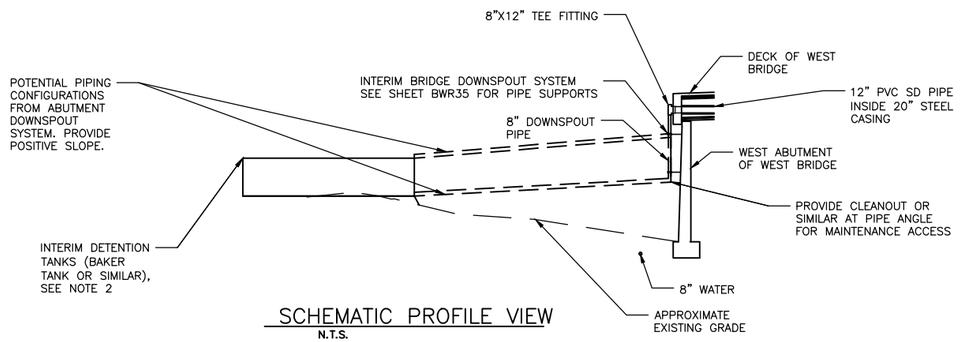

SCHEMATIC PROFILE VIEW
N.T.S.

INTERIM DETENTION TANK SYSTEM SCHEMATIC A
N.T.S.

JONATHAN F. HIRONS — STATE OF WASHINGTON — 48135 — REGISTERED PROFESSIONAL ENGINEER

NO.	DATE	BY	APPR.	REVISIONS

Approved By

TRANSPORTATION DESIGN MANAGER — DATE
S. COSTA
PROJECT MANAGER — DATE

J. BROWN — DESIGNED BY — DATE
J. FRYE — DRAWN BY — DATE
J. VANIER — CHECKED BY — DATE

City of Bellevue
TRANSPORTATION DEPARTMENT

HDR

NE SPRING BLVD - ZONE 1B
90% DESIGN

DRAINAGE DETAILS
DETENTION TANK SYSTEM

SHEET NAME DT5

SHT 36 OF 184

GENERAL NOTES:

1. OTHERWISE NOTED, DIMENSIONS ARE IN FEET.

FILTERRA GENERAL NOTES

1. EACH UNIT SHALL BE CONSTRUCTED AT THE LOCATIONS AND ELEVATIONS ACCORDING TO THE SIZES SHOWN ON THE APPROVED DRAWINGS. ANY MODIFICATIONS TO THE ELEVATION OR LOCATION SHALL BE AT THE DIRECTION OF AND APPROVED BY THE ENGINEER.
2. IF THE FILTERRA IS STORED BEFORE INSTALLATION, THE TOP SLAB MUST BE PLACED ON THE BOX USING THE 2X4 WOOD PROVIDED TO PREVENT ANY CONTAMINATION FROM THE SITE. ALL INTERNAL FITTINGS SUPPLIED (IF ANY), MUST BE LEFT IN PLACE AS PER THE DELIVERY.
3. THE UNIT SHALL BE PLACED ON A COMPACTED SUB-GRADE WITH A MINIMUM 6-INCH GRAVEL BASE MATCHING THE FINAL GRADE OF THE CURBLINE IN THE AREA OF THE UNIT. THE UNIT IS TO BE PLACED SUCH THAT THE UNIT AND TOP SLAB MATCH THE GRADE OF THE CURB IN THE AREA OF THE UNIT. COMPACT UNDISTURBED SUB-GRADE MATERIALS TO 95% OF MAXIMUM DENSITY AT +1-2% OF OPTIMUM MOISTURE. UNSUITABLE MATERIAL BELOW SUB-GRADE SHALL BE REPLACED TO THE SITE ENGINEER'S APPROVAL.
4. OUTLET CONNECTIONS SHALL BE ALIGNED AND SEALED TO MEET THE APPROVED DRAWINGS WITH MODIFICATIONS NECESSARY TO MEET SITE CONDITIONS AND LOCAL REGULATIONS.
5. ONCE THE UNIT IS SET, THE INTERNAL WOODEN FORMS AND PROTECTIVE MESH COVER MUST BE LEFT INTACT. REMOVE ONLY THE TEMPORARY WOODEN SHIPPING BLOCKS BETWEEN THE BOX AND TOP SLAB. THE TOP LID SHOULD BE SEALED ONTO THE BOX SECTION BEFORE BACKFILLING, USING A NON-SHRINK GROUT, BUTYL RUBBER, OR SIMILAR WATERPROOF SEAL. THE BOARDS ON TOP OF THE LID AND BOARDS SEALED IN THE UNIT'S THROAT MUST NOT BE REMOVED. THE SUPPLIER (AMERICAST OR ITS AUTHORIZED DEALER) WILL REMOVE THESE SECTIONS AT THE TIME OF ACTIVATION. BACKFILLING SHOULD BE PREFORMED IN A CAREFUL MANNER, BRINGING THE APPROPRIATE FILL MATERIAL UP IN 6" LIFTS ON ALL SIDES. PRECAST SECTIONS SHALL BE SET IN A MANNER THAT WILL RESULT IN A WATERIGHT JOINT. IN ALL INSTANCES, INSTALLATION OF FILTERRA UNIT SHALL CONFORM TO ASTM SPECIFICATION C891 "STANDARD PRACTICE FOR INSTALLATION OF UNDERGROUND PRECAST UTILITY STRUCTURES," UNLESS DIRECTED OTHERWISE IN CONTRACT DOCUMENTS.
6. CURB AND GUTTER CONSTRUCTION (WHERE PRESENT) SHALL ENSURE THAT THE FLOW-LINE OF THE FILTERRA UNITS IS AT A GREATER ELEVATION THAN THE FLOW-LINE OF THE BYPASS STRUCTURE OR RELIEF (DROP INLET, CURB CUT, OR SIMILAR). FAILURE TO COMPLY WITH THIS GUIDELINE MAY CAUSE FAILURE AND/OR DAMAGE TO THE FILTERRA ENVIRONMENTAL DEVICE.
7. EACH FILTERRA UNIT MUST RECEIVE ADEQUATE IRRIGATION TO ENSURE SURVIVAL OF THE LIVING SYSTEM DURING PERIODS OF DRIER WEATHER. THIS MAY BE ACHIEVED THROUGH A PIPED SYSTEM, GUTTER FLOW, OR THROUGH THE TREE GRATE.
8. REFER TO SPECIFICATIONS FOR IRRIGATION PIPE OPENINGS.

ACTIVATION

1. ACTIVATION OF THE FILTERRA UNIT IS PERFORMED ONLY BY THE SUPPLIER. PURCHASER IS RESPONSIBLE FOR FILTERRA INLET PROTECTION AND SUBSEQUENT CLEAN OUT COST. THIS PROCESS CANNOT COMMENCE UNTIL THE PROJECT SITE IS FULLY STABILIZED AND CLEANED (FULL LANDSCAPING, GRASS COVER, FINAL PAVING, AND STREET SWEEPING COMPLETE), NEGATING THE CHANCE OF CONSTRUCTION MATERIALS CONTAMINATING THE FILTERRA SYSTEM. CARE SHALL BE TAKEN DURING CONSTRUCTION NOT TO DAMAGE THE PROTECTIVE THROAT AND TOP PLATES.
2. ACTIVATION INCLUDES INSTALLATION OF PLANT(S) AND MULCH LAYERS AS NECESSARY.

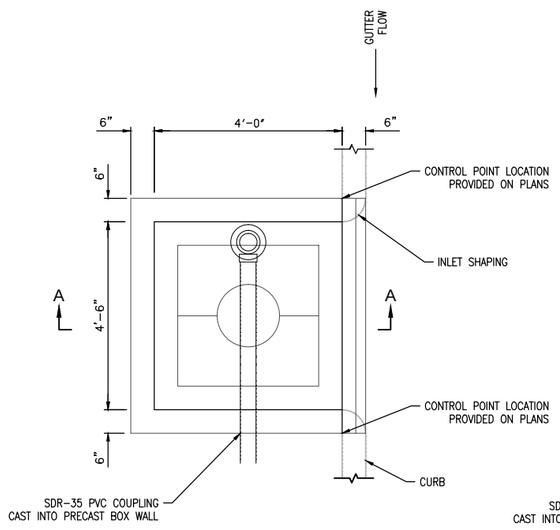

PLAN VIEW – 4'x4' FILTERRA 1
N.T.S.

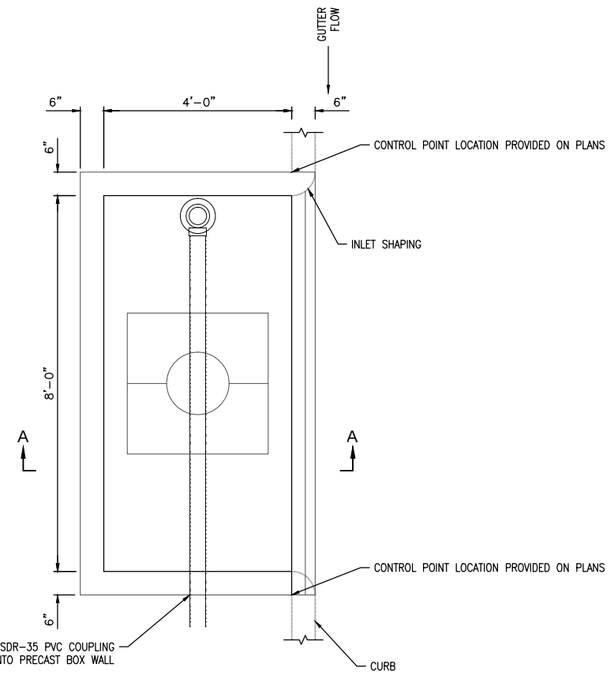

PLAN VIEW – 8'x4' FILTERRA 2
N.T.S.

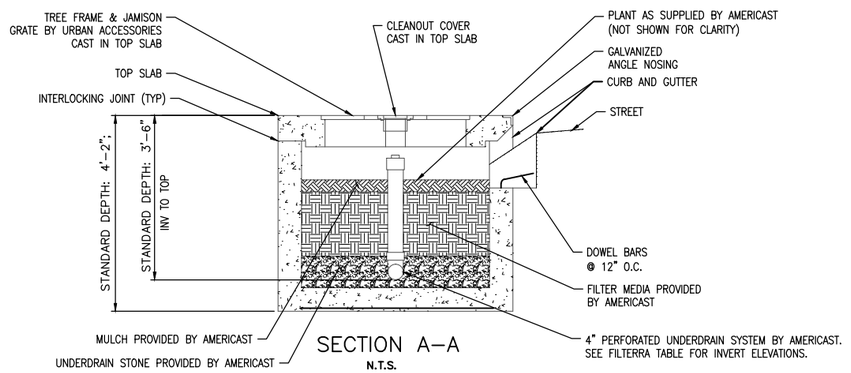

SECTION A–A
N.T.S.

NOTE: RECESSED TOP NOT SHOWN FOR CLARITY.

PRECAST FILTERRA UNIT
N.T.S.

A
–

FILTERRA TABLE

NAME	SIZE	TYPE	OUTLET IE
FILTERRA 1	4'x4'	STANDARD DEPTH	177.75
FILTERRA 2	8'x4'	STANDARD DEPTH	173.91

JONATHAN E. HILDE — STATE OF WASHINGTON — 48135 — REGISTERED PROFESSIONAL ENGINEER

NO.	DATE	BY	APPR.	REVISIONS

Approved By

TRANSPORTATION DESIGN MANAGER DATE
S. COSTA
PROJECT MANAGER DATE

J. BROWN — DESIGNED BY — DATE
J. FRYE — DRAWN BY — DATE
J. VANIER — CHECKED BY — DATE

City of Bellevue
TRANSPORTATION DEPARTMENT

HDR

NE SPRING BLVD - ZONE 1B
90% DESIGN

DRAINAGE DETAILS
FILTERRA BIORETENTION SYSTEM

SHEET NAME **DT6**

SHT 37 OF 184

SECTION 28, T. 25 N., R5E., W.M.
KING COUNTY

90% SUBMITTAL NOT FOR CONSTRUCTION

GENERAL NOTES:

1. UNLESS OTHERWISE NOTED, ALL DIMENSIONS ARE IN FEET.
2. THE CONTRACTOR SHALL POTHOLE ALL POTENTIAL CONFLICTS WITH UTILITIES TO VERIFY THE HORIZONTAL AND VERTICAL LOCATION OF THE EXISTING UTILITIES. WHERE THE VERTICAL DISTANCE BETWEEN UTILITIES IS LESS THAN 6 INCHES. THE CONTRACTOR SHALL PROVIDE AN O.D. X O.D. X 2.5 INCH ETHAFOAM PAD PER THE SPECIAL PROVISIONS 7-08.3(2). THE O.D. DIMENSION IS BASED ON "THE LARGEST DIAMETER PIPE IN CROSSING CONFLICT" FOR THAT PARTICULAR LOCATION.
3. CALL UTILITIES UNDERGROUND LOCATION CENTER AT 1-800-424-5555 48 HOURS PRIOR TO CONSTRUCTION.
4. ALL WM PIPE SHALL BE DUCTILE IRON PIPE, CLASS 52.
5. STATIONS AND OFFSETS PROVIDED FOR TEES, BENDS, AND METERS ALL REFERENCE TO THE CENTER OF THE APPURTENANCE LOCATION.

LEGEND

- WATER METER AND VAULT
- BLOW-OFF VALVE ASSEMBLY
- TEE & GATE VALVE
- FIRE HYDRANT
- D.I. X AC COUPLING
- D.I. PIPE SLEEVE
- REDUCER
- THRUST BLOCK
- FLEX-TEND FLEXIBLE EXPANSION JOINT
- PROPOSED CATCH BASIN TYPE 1
- PROPOSED CATCH BASIN TYPE 2
- PROPOSED WATER MAIN (W)
- PROPOSED GAS (G)
- PROPOSED STORM DRAIN (SD)
- PROPOSED UNDERGROUND ELECTRICAL (UGE)
- PROPOSED TELECOM (UGT)
- EXISTING FENCE (X)
- EXISTING GAS (G)
- EXISTING FIBER OPTIC (FO)
- EXISTING STORM DRAIN (SD)
- EXISTING SANITARY SEWER (SS)
- EXISTING WATER LINE (W)
- EXISTING OVERHEAD TELEPHONE (OHT)
- EXISTING OVERHEAD TELEVISION (OHTV)
- EXISTING OVERHEAD ELECTRIC (OHE)
- EXISTING UNDERGROUND TELEPHONE (UGT)
- EXISTING UNDERGROUND ELECTRIC (UGE)

CONSTRUCTION NOTES:

1. 175.8 LF OF 16" D.I.
2. 11.0 LF OF 16" D.I.
3. 21.8 LF OF 16" D.I.
4. 436.8 LF OF 16" D.I.
5. 33.2 LF OF 6" D.I.

REMOVAL NOTES:

1. REMOVE EXISTING 8" WM PIPE.
2. REMOVE EXISTING FIRE HYDRANT AND LATERAL

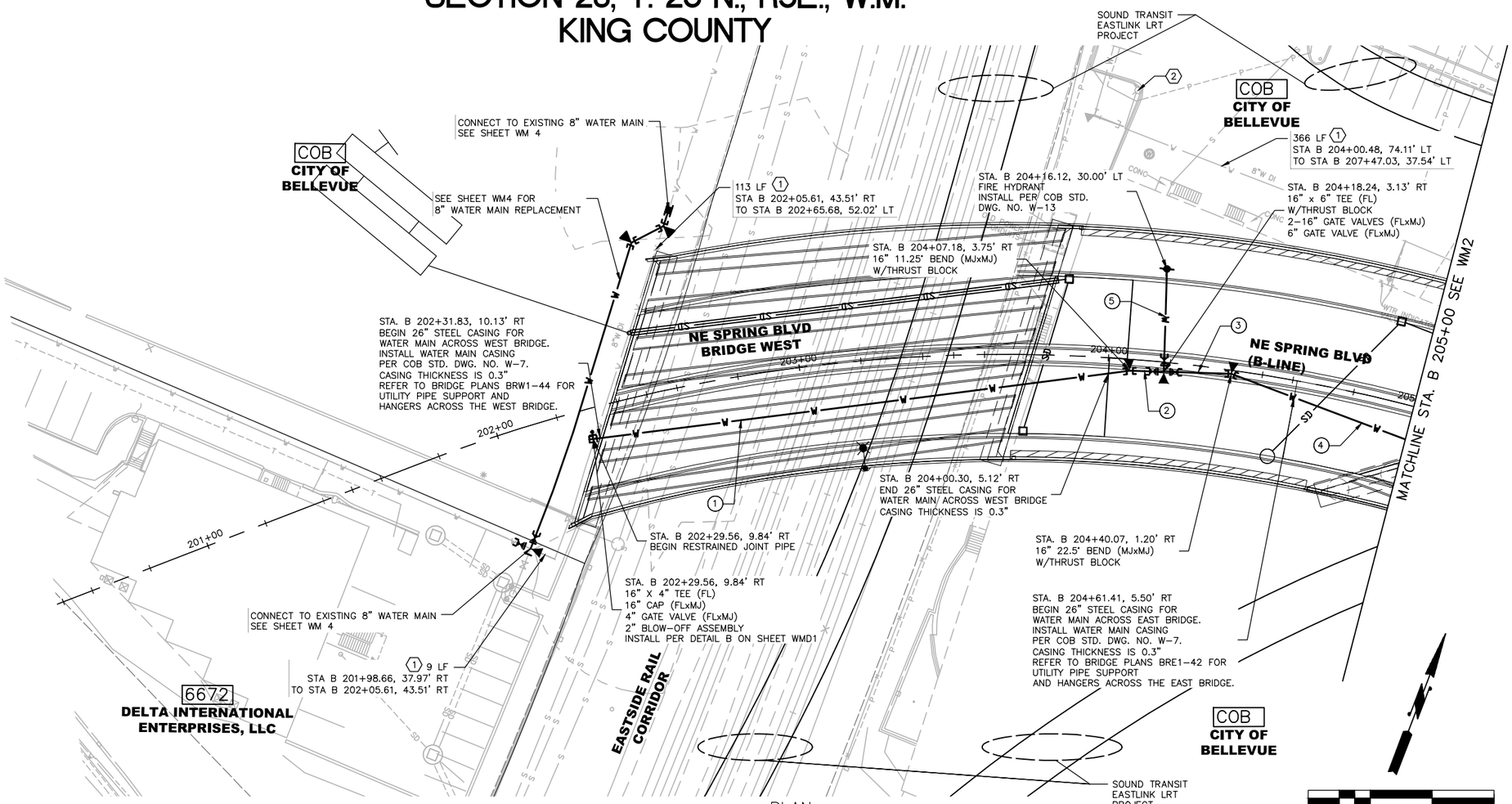

PLAN

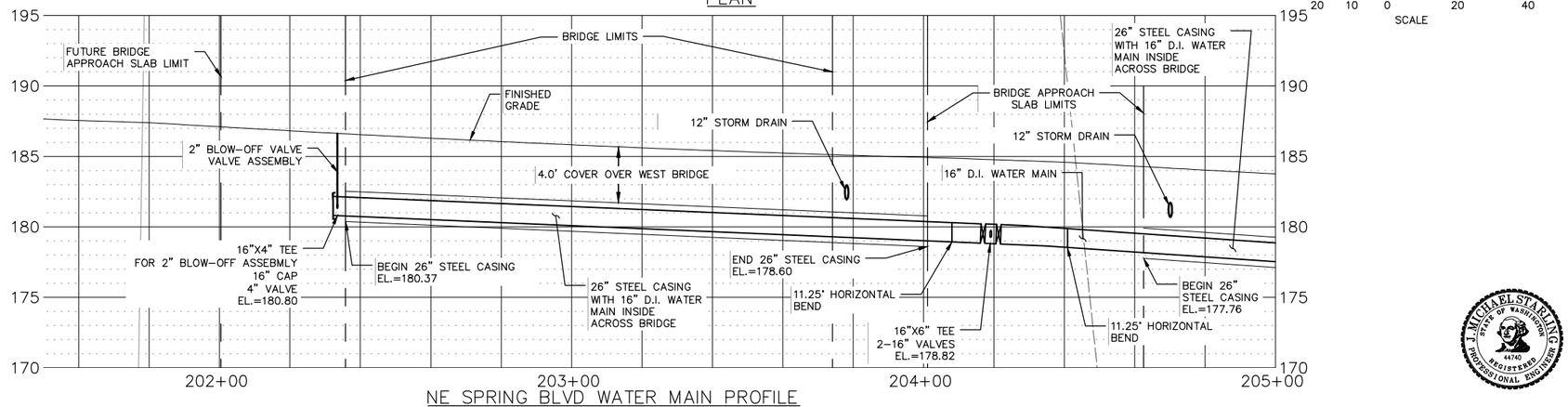

NE SPRING BLVD WATER MAIN PROFILE

KEY PLAN

MICHAEL STARLING — STATE OF WASHINGTON — 44740 — REGISTERED PROFESSIONAL ENGINEER

NO.	DATE	BY	APPR.	REVISIONS

Approved By

TRANSPORTATION DESIGN MANAGER — DATE

S. COSTA

PROJECT MANAGER — DATE

M. STARLING — DESIGNED BY — DATE

J. FRYE — DRAWN BY — DATE

G. ROYCROFT — CHECKED BY — DATE

City of Bellevue
TRANSPORTATION DEPARTMENT

HDR

NE SPRING BLVD - ZONE 1B
90% DESIGN

WATER MAIN PLAN
BEGIN ZONE 1B TO STA. 205+00

SHEET NAME: WM1

SHT 38 OF 184

90% SUBMITTAL NOT FOR CONSTRUCTION

SECTION 28, T. 25 N., R5E., W.M.
KING COUNTY

GENERAL NOTES:

1. UNLESS OTHERWISE NOTED, ALL DIMENSIONS ARE IN FEET.
2. THE CONTRACTOR SHALL POTHOLE ALL POTENTIAL CONFLICTS WITH UTILITIES TO VERIFY THE HORIZONTAL AND VERTICAL LOCATION OF THE EXISTING UTILITIES. WHERE THE VERTICAL DISTANCE BETWEEN UTILITIES IS LESS THAN 6 INCHES. THE CONTRACTOR SHALL PROVIDE AN O.D. X O.D. X 2.5 INCH ETHAFOAM PAD PER THE SPECIAL PROVISIONS 7-08.3(2). THE O.D. DIMENSION IS BASED ON "THE LARGEST DIAMETER PIPE IN CROSSING CONFLICT" FOR THAT PARTICULAR LOCATION.
3. CALL UTILITIES UNDERGROUND LOCATION CENTER AT 1-800-424-5555 48 HOURS PRIOR TO CONSTRUCTION.
4. ALL WM PIPE SHALL BE DUCTILE IRON PIPE, CLASS 52.
5. STATIONS AND OFFSETS PROVIDED FOR TEES, BENDS, AND METERS ALL REFERENCE TO THE CENTER OF THE APPURTENANCE LOCATION.

LEGEND

- WATER METER AND VAULT
- BLOW-OFF VALVE ASSEMBLY
- TEE & GATE VALVE
- FIRE HYDRANT
- D.I. X AC COUPLING
- D.I. PIPE SLEEVE
- REDUCER
- THRUST BLOCK
- FLEX-TEND FLEXIBLE EXPANSION JOINT
- PROPOSED CATCH BASIN TYPE 1
- PROPOSED CATCH BASIN TYPE 2
- PROPOSED WATER MAIN
- PROPOSED GAS
- PROPOSED STORM DRAIN
- PROPOSED UNDERGROUND ELECTRICAL
- PROPOSED TELECOM
- EXISTING FENCE
- EXISTING GAS
- EXISTING FIBER OPTIC
- EXISTING STORM DRAIN
- EXISTING SANITARY SEWER
- EXISTING WATER LINE
- EXISTING OVERHEAD TELEPHONE
- EXISTING OVERHEAD TELEVISION
- EXISTING OVERHEAD ELECTRIC
- EXISTING UNDERGROUND TELEPHONE
- EXISTING UNDERGROUND ELECTRIC

CONSTRUCTION NOTES:

(1) 436.8 LF OF 16" D.I.

REMOVAL NOTES:

(1) REMOVE EXISTING 8" WM PIPE
(2) REMOVE EXISTING FIRE HYDRANT AND LATERAL
(3) REMOVE EXISTING 10" WM PIPE
(4) REMOVE EXISTING BLOW-OFF ASSEMBLY AND APPURTENANCES

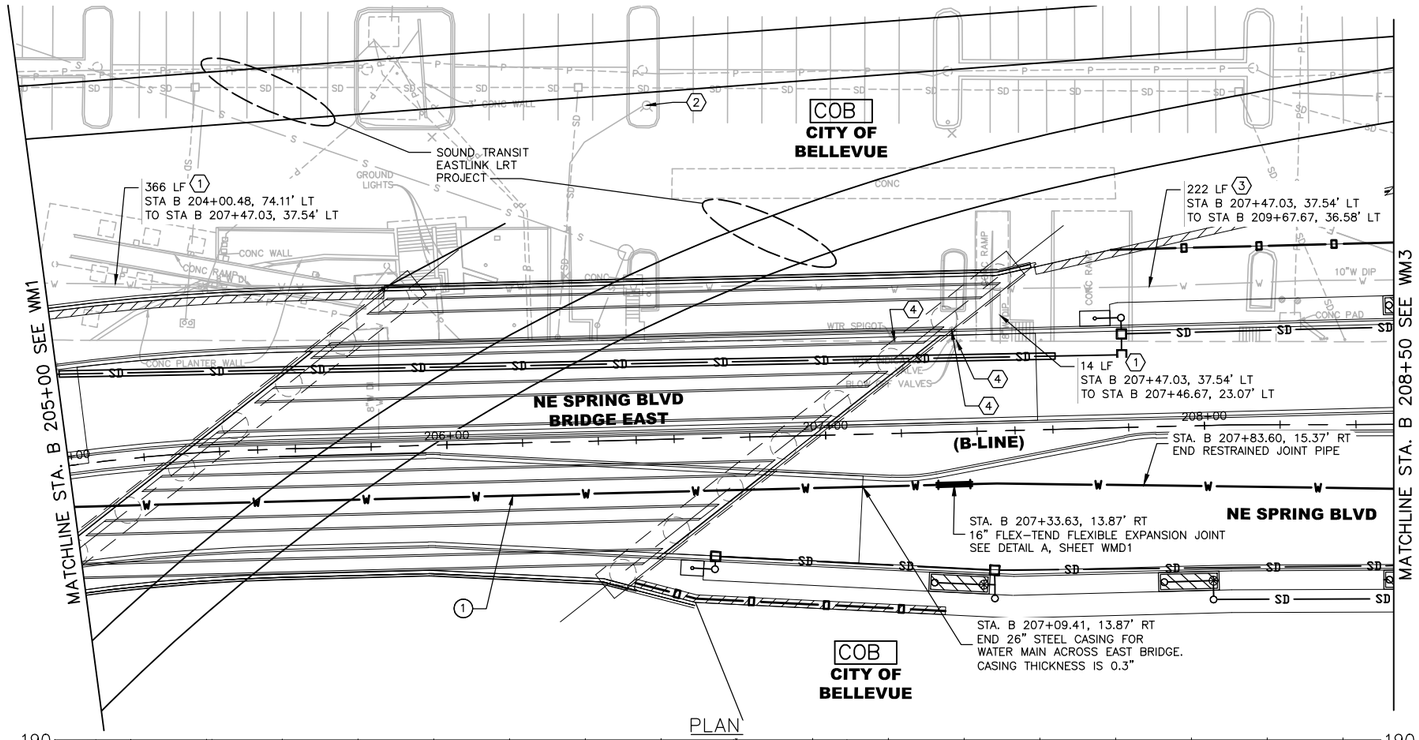

PLAN

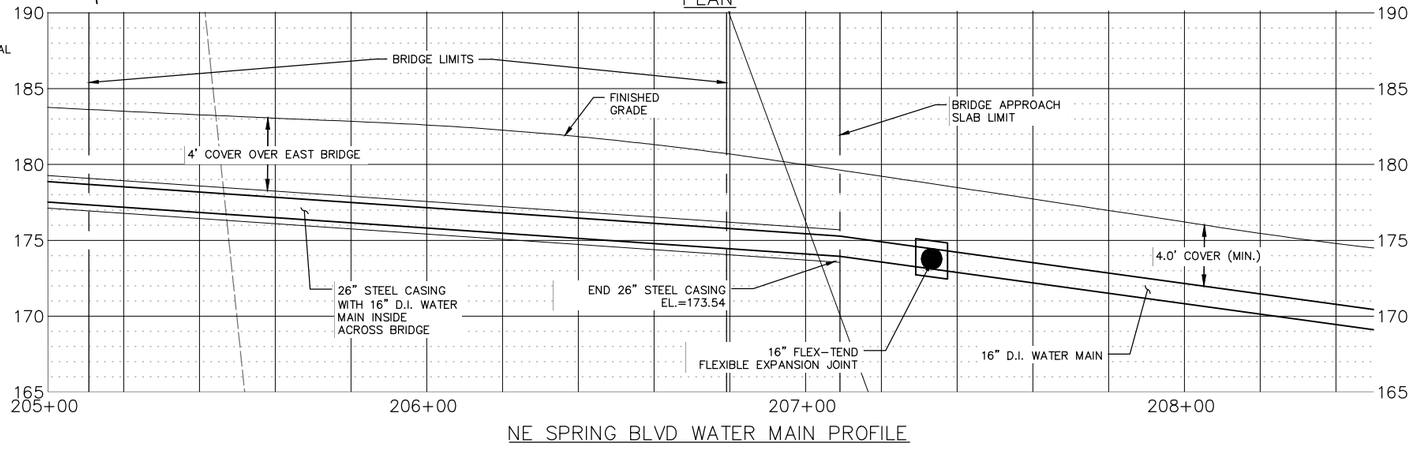

NE SPRING BLVD WATER MAIN PROFILE

KEY PLAN

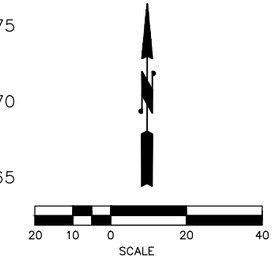

NO.	DATE	BY	APPR.	REVISIONS

Approved By

TRANSPORTATION DESIGN MANAGER S. COSTA DATE
PROJECT MANAGER DATE

M. STARLING
DESIGNED BY DATE
J. FRYE
DRAWN BY DATE
G. ROYCROFT
CHECKED BY DATE

City of Bellevue
TRANSPORTATION DEPARTMENT

HDR

NE SPRING BLVD - ZONE 1B
90% DESIGN

WATER MAIN PLAN
STA. B 205+00 TO STA. B 208+50

SHEET NAME WM2

SHT 39 OF 184

90% SUBMITTAL NOT FOR CONSTRUCTION

SECTION 28, T. 25 N., R5E., W.M.
KING COUNTY

GENERAL NOTES:

1. UNLESS OTHERWISE NOTED, ALL DIMENSIONS ARE IN FEET.
2. THE CONTRACTOR SHALL POTHOLE ALL POTENTIAL CONFLICTS WITH UTILITIES TO VERIFY THE HORIZONTAL AND VERTICAL LOCATION OF THE EXISTING UTILITIES. WHERE THE VERTICAL DISTANCE BETWEEN UTILITIES IS LESS THAN 6 INCHES. THE CONTRACTOR SHALL PROVIDE AN O.D. X O.D. X 2.5 INCH ETHAFOAM PAD PER THE SPECIAL PROVISIONS 7-08.3(2). THE O.D. DIMENSION IS BASED ON "THE LARGEST DIAMETER PIPE IN CROSSING CONFLICT" FOR THAT PARTICULAR LOCATION.
3. CALL UTILITIES UNDERGROUND LOCATION CENTER AT 1-800-424-5555 48 HOURS PRIOR TO CONSTRUCTION.
4. ALL WM PIPE SHALL BE DUCTILE IRON PIPE, CLASS 52.
5. STATIONS AND OFFSETS PROVIDED FOR TEES, BENDS, AND METERS ALL REFERENCE TO THE CENTER OF THE APPURTENANCE LOCATION.

LEGEND

- WATER METER AND VAULT
- BLOW-OFF VALVE ASSEMBLY
- TEE & GATE VALVE
- FIRE HYDRANT
- D.I. X AC COUPLING
- D.I. PIPE SLEEVE
- REDUCER
- THRUST BLOCK
- FLEX-TEND FLEXIBLE EXPANSION JOINT
- PROPOSED CATCH BASIN TYPE 1
- PROPOSED CATCH BASIN TYPE 2
- W — PROPOSED WATER MAIN
- G — PROPOSED GAS
- SD — PROPOSED STORM DRAIN
- UGE — PROPOSED UNDERGROUND ELECTRICAL
- UGT — PROPOSED TELECOM
- X — EXISTING FENCE
- G — EXISTING GAS
- FO — EXISTING FIBER OPTIC
- SD — EXISTING STORM DRAIN
- SS — EXISTING SANITARY SEWER
- W — EXISTING WATER LINE
- OHT — EXISTING OVERHEAD TELEPHONE
- OHTV — EXISTING OVERHEAD TELEVISION
- OHE — EXISTING OVERHEAD ELECTRIC
- UGT — EXISTING UNDERGROUND TELEPHONE
- UGE — EXISTING UNDERGROUND ELECTRIC

CONSTRUCTION NOTES:

1. 436.8 LF OF 16" D.I.
2. 123.8 LF OF 16" D.I.
3. 49.0 LF OF 6" D.I.

REMOVAL NOTES:

3. REMOVE EXISTING 10" WM PIPE
4. REMOVE EXISTING BLOW-OFF ASSEMBLY AND APPURTENANCES

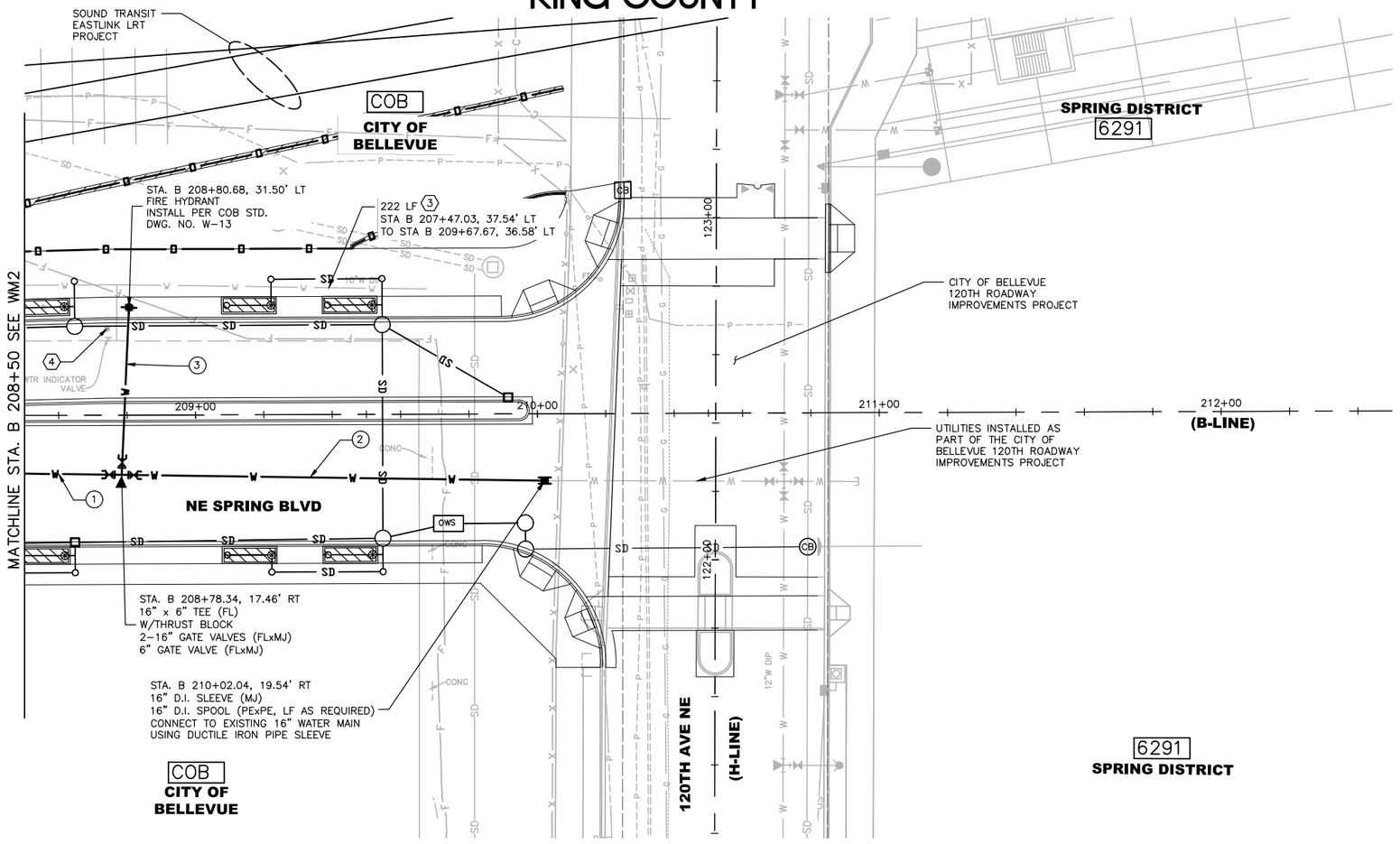

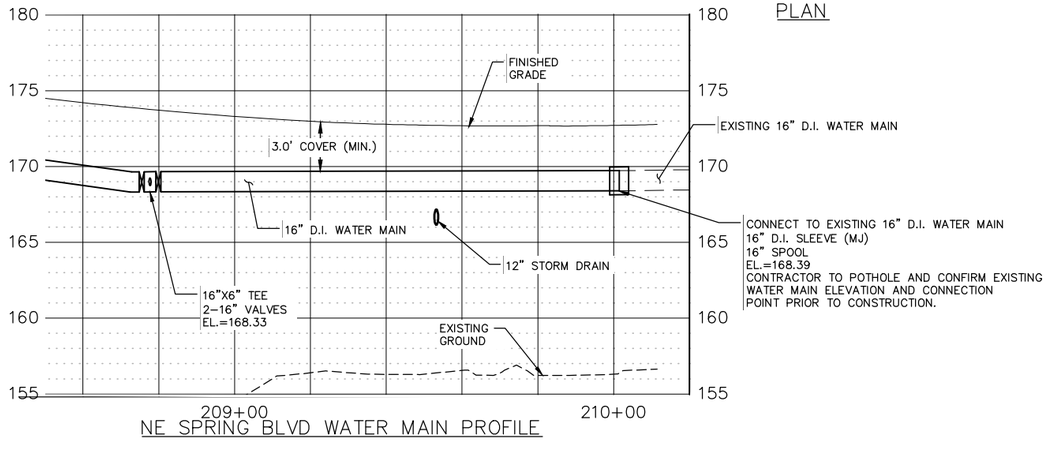

NE SPRING BLVD WATER MAIN PROFILE

KEY PLAN

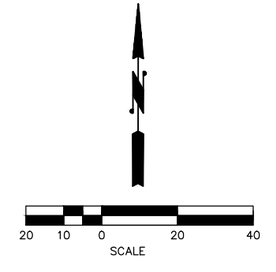

J. MICHAEL STARLING — STATE OF WASHINGTON — 44740 — REGISTERED PROFESSIONAL ENGINEER

NO.	DATE	BY	APPR.	REVISIONS

Approved By

TRANSPORTATION DESIGN MANAGER — DATE
S. COSTA
PROJECT MANAGER — DATE

M. STARLING — DESIGNED BY — DATE
J. FRYE — DRAWN BY — DATE
G. ROYCROFT — CHECKED BY — DATE

City of Bellevue
TRANSPORTATION DEPARTMENT

HDR

NE SPRING BLVD - ZONE 1B
90% DESIGN

WATER MAIN PLAN
STA. B 208+50 TO END ZONE 1B

SHEET NAME: WM3

SHT 40 OF 184

90% SUBMITTAL NOT FOR CONSTRUCTION

SECTION 28, T. 25 N., R5E., W.M.
KING COUNTY

GENERAL NOTES:

1. UNLESS OTHERWISE NOTED, ALL DIMENSIONS ARE IN FEET.
2. THE CONTRACTOR SHALL POTHOLE ALL POTENTIAL CONFLICTS WITH UTILITIES TO VERIFY THE HORIZONTAL AND VERTICAL LOCATION OF THE EXISTING UTILITIES. WHERE THE VERTICAL DISTANCE BETWEEN UTILITIES IS LESS THAN 6 INCHES. THE CONTRACTOR SHALL PROVIDE AN O.D. X O.D. X 2.5 INCH ETHAFOAM PAD PER THE SPECIAL PROVISIONS 7-08.3(2). THE O.D. DIMENSION IS BASED ON "THE LARGEST DIAMETER PIPE IN CROSSING CONFLICT" FOR THAT PARTICULAR LOCATION.
3. CALL UTILITIES UNDERGROUND LOCATION CENTER AT 1-800-424-5555 48 HOURS PRIOR TO CONSTRUCTION.
4. ALL WM PIPE SHALL BE DUCTILE IRON PIPE, CLASS 52.
5. STATIONS AND OFFSETS PROVIDED FOR TEES, BENDS, AND METERS ALL REFERENCE TO THE CENTER OF THE APPURTENANCE LOCATION.

LEGEND

- WATER METER AND VAULT
- BLOW-OFF VALVE ASSEMBLY
- TEE & GATE VALVE
- FIRE HYDRANT
- D.I. X AC COUPLING
- D.I. PIPE SLEEVE
- REDUCER
- THRUST BLOCK
- FLEX-TEND FLEXIBLE EXPANSION JOINT
- PROPOSED CATCH BASIN TYPE 1
- PROPOSED CATCH BASIN TYPE 2
- W — PROPOSED WATER MAIN
- G — PROPOSED GAS
- SD — PROPOSED STORM DRAIN
- UGE — PROPOSED UNDERGROUND ELECTRICAL
- UGT — PROPOSED TELECOM
- X — X — EXISTING FENCE
- G — EXISTING GAS
- FO — EXISTING FIBER OPTIC
- SD — EXISTING STORM DRAIN
- SS — EXISTING SANITARY SEWER
- W — EXISTING WATER LINE
- OHT — EXISTING OVERHEAD TELEPHONE
- OHTV — EXISTING OVERHEAD TELEVISION
- OHE — EXISTING OVERHEAD ELECTRIC
- UGT — EXISTING UNDERGROUND TELEPHONE
- UGE — EXISTING UNDERGROUND ELECTRIC

CONSTRUCTION NOTES:

1. 104.0 LF OF 8" D.I.
2. 11.6 LF OF 8" D.I.
3. 5.0 LF OF 8" D.I.

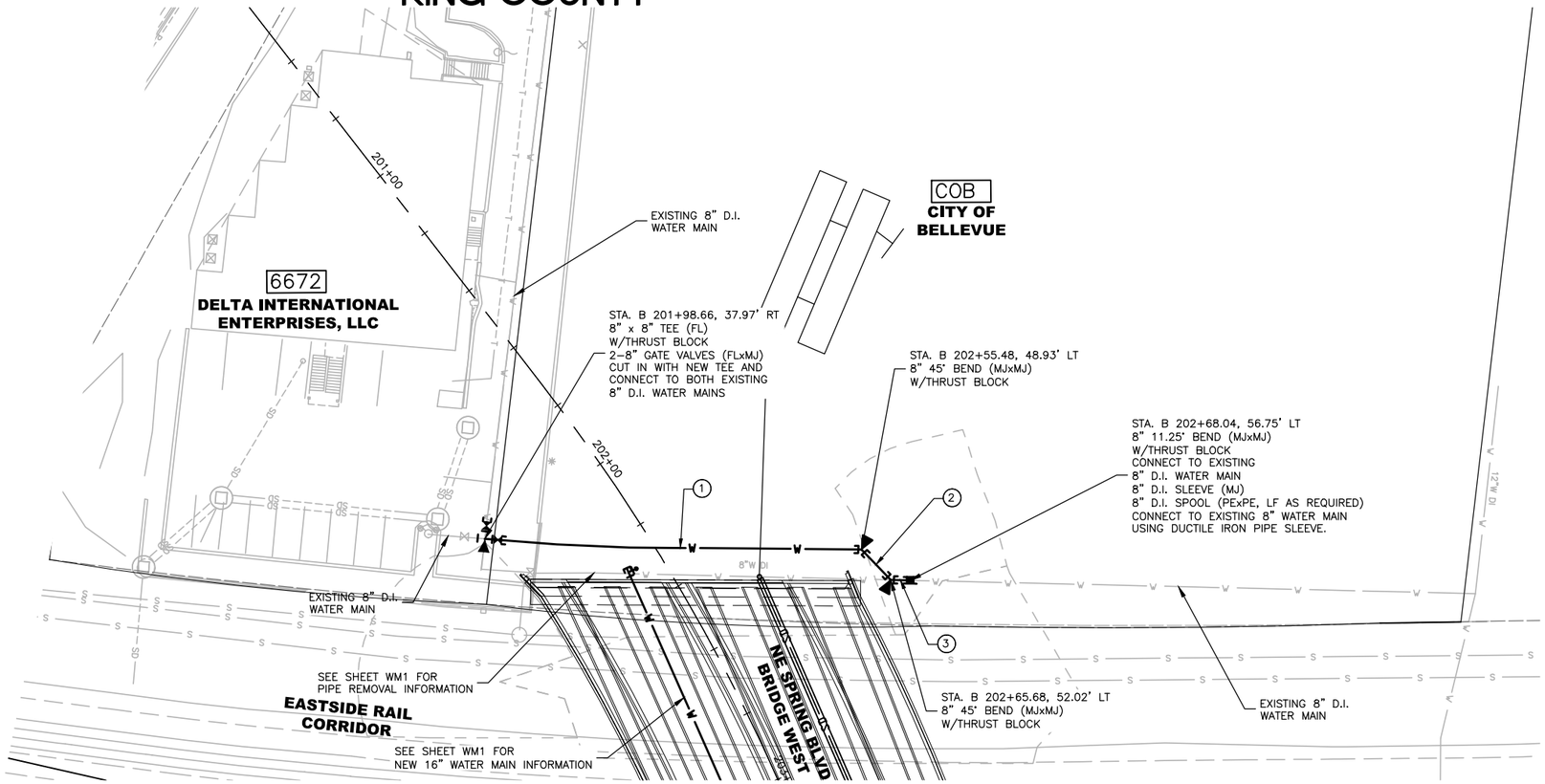

PLAN

SCALE: 20 10 0 20 40

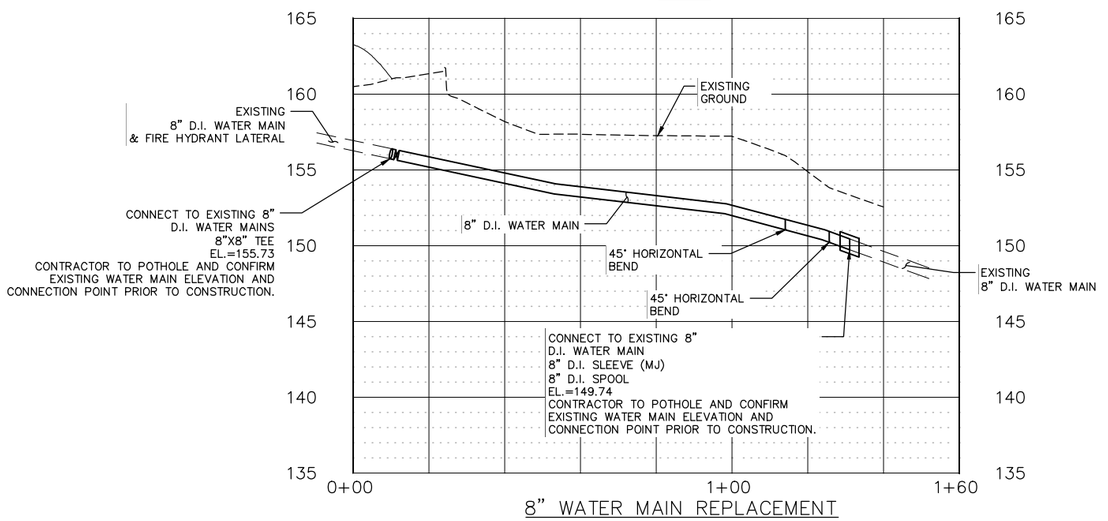

8" WATER MAIN REPLACEMENT

KEY PLAN

NO.	DATE	BY	APPR.	REVISIONS

Approved By

TRANSPORTATION DESIGN MANAGER — DATE
S. COSTA
PROJECT MANAGER — DATE

M. STARLING — DESIGNED BY — DATE
J. FRYE — DRAWN BY — DATE
G. ROYCROFT — CHECKED BY — DATE

City of Bellevue
TRANSPORTATION DEPARTMENT

HDR

NE SPRING BLVD - ZONE 1B
90% DESIGN

WATER MAIN PLAN
STA. B 200+50 TO STA. B 204+00

SHEET NAME: WM4

SHT 41 OF 184

90% SUBMITTAL NOT FOR CONSTRUCTION

SECTION 28, T. 25 N., R5E., W.M.
KING COUNTY

GENERAL NOTES:

1. UNLESS OTHERWISE NOTED, ALL DIMENSIONS ARE IN FEET.
2. THE CONTRACTOR SHALL POTHOLE ALL POTENTIAL CONFLICTS WITH UTILITIES TO VERIFY THE HORIZONTAL AND VERTICAL LOCATION OF THE EXISTING UTILITIES. WHERE THE VERTICAL DISTANCE BETWEEN UTILITIES IS LESS THAN 6 INCHES. THE CONTRACTOR SHALL PROVIDE AN O.D. X O.D. X 2.5 INCH ETHAFOAM PAD PER THE SPECIAL PROVISIONS 7-08.3(2). THE O.D. DIMENSION IS BASED ON "THE LARGEST DIAMETER PIPE IN CROSSING CONFLICT" FOR THAT PARTICULAR LOCATION.
3. CALL UTILITIES UNDERGROUND LOCATION CENTER AT 1-800-424-5555 48 HOURS PRIOR TO CONSTRUCTION.
4. ALL WM PIPE SHALL BE DUCTILE IRON PIPE, CLASS 52.
5. STATIONS AND OFFSETS PROVIDED FOR TEES, BENDS, AND METERS ALL REFERENCE TO THE CENTER OF THE APPURTENANCE LOCATION.

LEGEND

- WATER METER AND VAULT
- BLOW-OFF VALVE ASSEMBLY
- TEE & GATE VALVE
- FIRE HYDRANT
- D.I. X AC COUPLING
- D.I. PIPE SLEEVE
- REDUCER
- THRUST BLOCK
- FLEX-TEND FLEXIBLE EXPANSION JOINT
- PROPOSED CATCH BASIN TYPE 1
- PROPOSED CATCH BASIN TYPE 2
- W — PROPOSED WATER MAIN
- G — PROPOSED GAS
- SD — PROPOSED STORM DRAIN
- UGE — PROPOSED UNDERGROUND ELECTRICAL
- UGT — PROPOSED TELECOM
- X — X — EXISTING FENCE
- G — EXISTING GAS
- FO — EXISTING FIBER OPTIC
- SD — EXISTING STORM DRAIN
- SS — EXISTING SANITARY SEWER
- W — EXISTING WATER LINE
- OHT — EXISTING OVERHEAD TELEPHONE
- OHTV — EXISTING OVERHEAD TELEVISION
- OHE — EXISTING OVERHEAD ELECTRIC
- UGT — EXISTING UNDERGROUND TELEPHONE
- UGE — EXISTING UNDERGROUND ELECTRIC

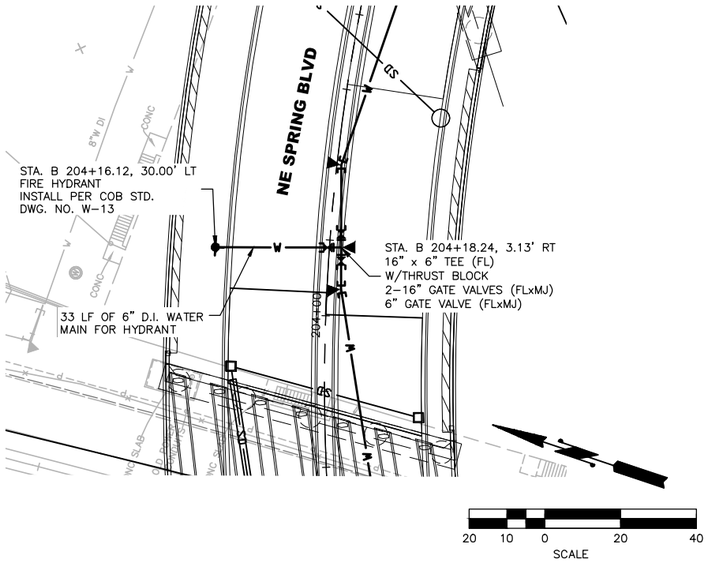

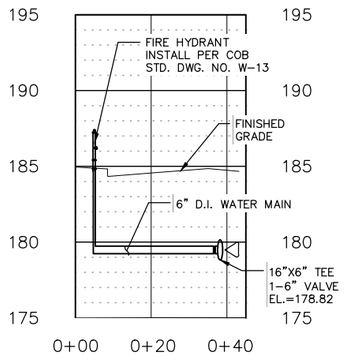

FIRE HYDRANT PROFILE -STA B 204+18

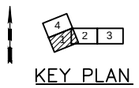

KEY PLAN

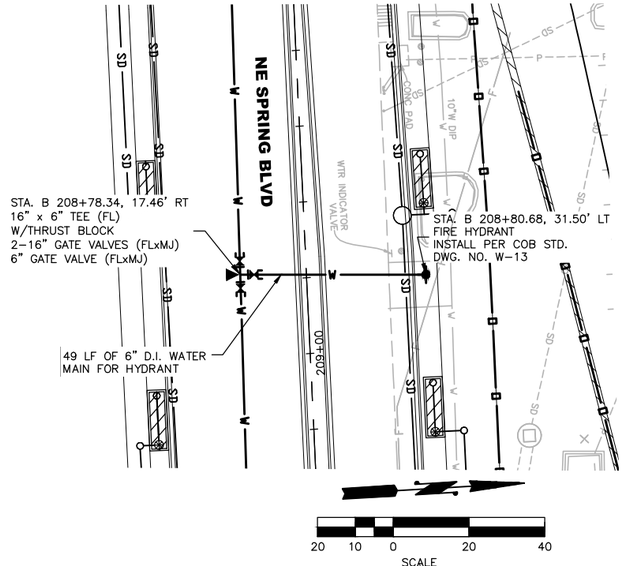

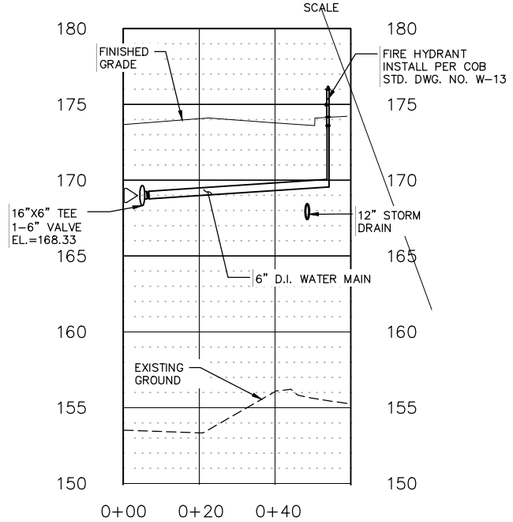

FIRE HYDRANT PROFILE - STA B 208+78

KEY PLAN

NO.	DATE	BY	APPR.	REVISIONS

Approved By

TRANSPORTATION DESIGN MANAGER — DATE
S. COSTA
PROJECT MANAGER — DATE

M. STARLING — DESIGNED BY — DATE
J. FRYE — DRAWN BY — DATE
G. ROYCROFT — CHECKED BY — DATE

City of Bellevue
TRANSPORTATION DEPARTMENT

HDR

NE SPRING BLVD - ZONE 1B
90% DESIGN

WATER MAIN PLAN
FIRE HYDRANT LATERALS

SHEET NAME **WM5**

SHT 42 OF 184

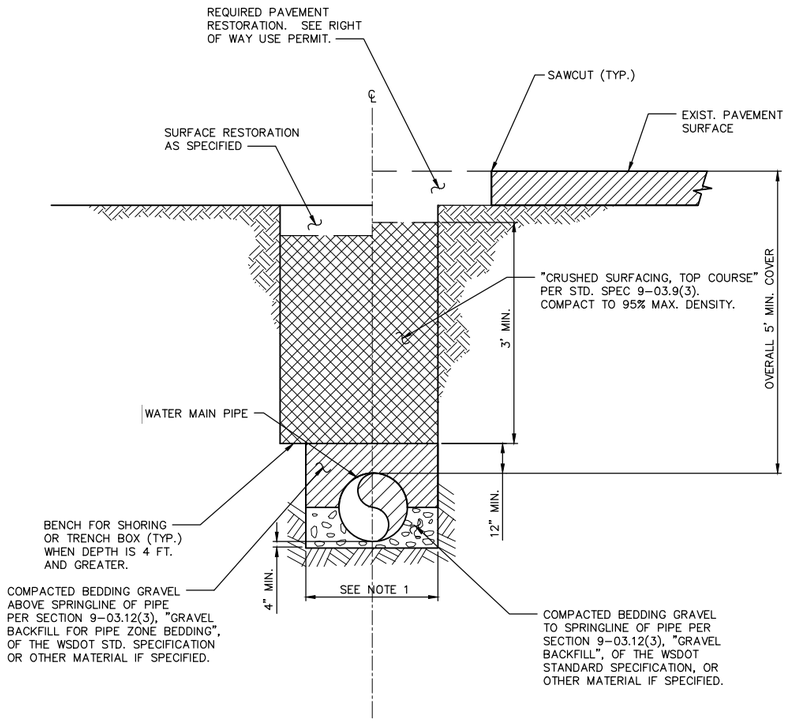

PAVED AREAS

NOTES:

1. MAXIMUM WIDTH OF TRENCH AT TOP OF PIPE:
   * 36" FOR PIPE UP TO AND INCLUDING 12" NOMINAL DIAMETER.
   * I.D. PLUS 18" FOR PIPE LARGER THAN 12" NOMINAL DIAMETER.
2. EXCAVATIONS SHALL COMPLY WITH THE SAFETY STANDARDS DESCRIBED IN CHAPTER 296-155, PART N OF THE WAC.
3. SEE "BEDDING, BACKFILL AND COMPACTION" IN CHAPTER W5 OF THE ENGINEERING STANDARDS FOR ADDITIONAL CONSTRUCTION REQUIREMENTS.

TYPICAL TRENCH DETAIL

NTS

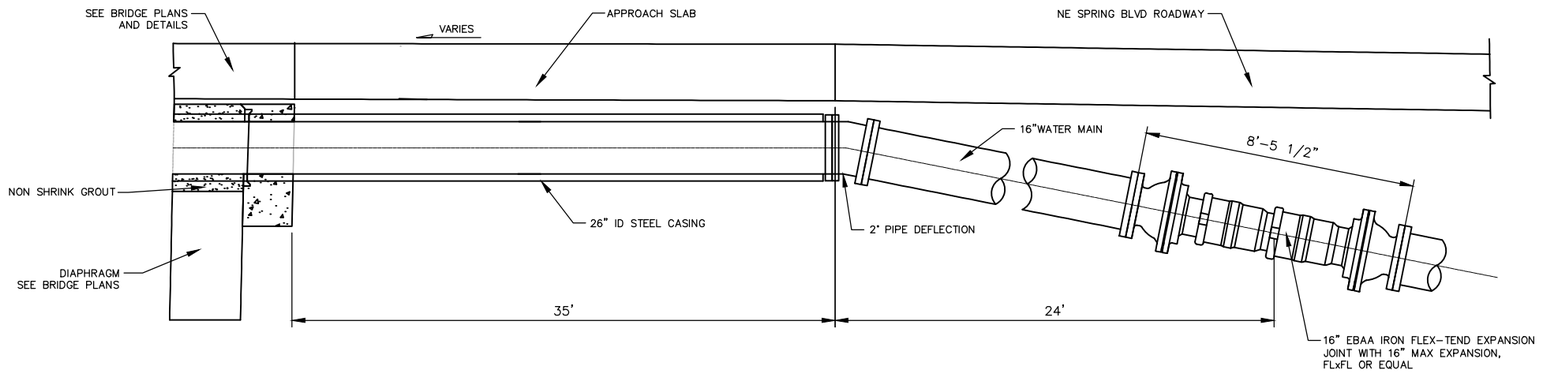

EAST BRIDGE FLEXIBLE JOINT

FLEX-TEND FLEXIBLE EXPANSION JOINT DETAILS (A)

N.T.S.

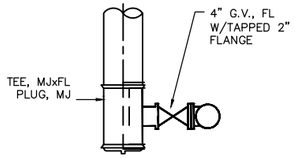

TOP VIEW

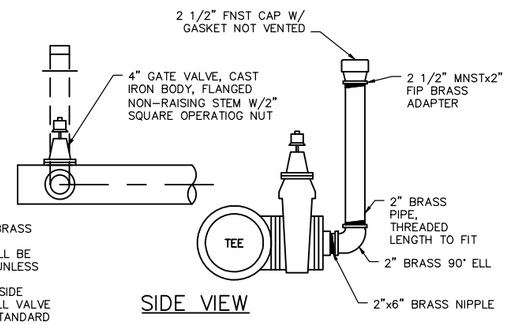

SIDE VIEW

NOTES:

1. ALL PIPE SHALL BE BRASS BEYOND GATE VALVE.
2. ALL ASSEMBLIES SHALL BE LOCATED IN STREET UNLESS OTHERWISE NOTED.
3. WHEN INSTALLED OUTSIDE PAVED AREAS, INSTALL VALVE MARKER POST PER STANDARD DETAILS NO. W-14 AND FIELD LOCATE ADJACENT TO METER BOX PAINTED WITH TWO COATS OF RUSTOLEUM HIGH GLOSS WHITE PAINT.

2" BLOW-OFF ASSEMBLY

2" BLOW-OFF VALVE ASSEMBLY DETAIL (B)

N.T.S.

J. MICHAEL STARLING — STATE OF WASHINGTON — 44740 — REGISTERED PROFESSIONAL ENGINEER

NO.	DATE	BY	APPR.	REVISIONS

Approved By

TRANSPORTATION DESIGN MANAGER — DATE
S. COSTA
PROJECT MANAGER — DATE

M. STARLING
DESIGNED BY — DATE
J. FRYE
DRAWN BY — DATE
G. ROYCROFT
CHECKED BY — DATE

City of Bellevue
TRANSPORTATION DEPARTMENT

HDR

NE SPRING BLVD - ZONE 1B
90% DESIGN

WATER MAIN DETAILS

SHEET NAME **WMD1**

SHT 43 OF 184

GENERAL NOTES:

1. UNLESS OTHERWISE NOTED, ALL DIMENSIONS ARE IN FEET.
2. SEE SHEET IRD1 FOR IRRIGATION LEGEND, ABBREVIATIONS, SCHEDULE AND NOTES.
3. SEE SHEETS IRD1 THROUGH IRD2 FOR IRRIGATION DETAILS.

SECTION 28, T. 25 N., R5E., W.M.
KING COUNTY

90% SUBMITTAL NOT FOR CONSTRUCTION

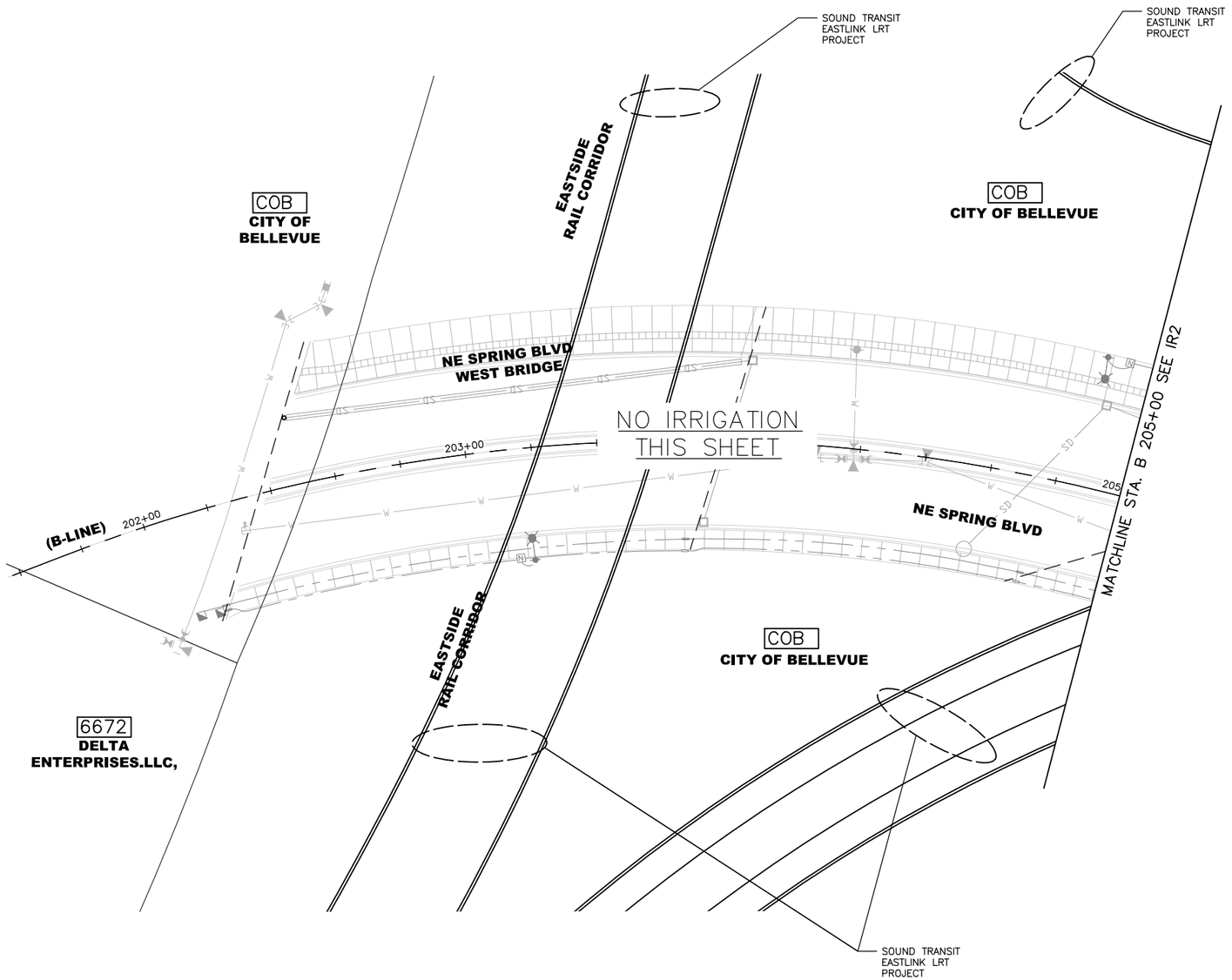

KEY PLAN

20 10 0 20 40
SCALE

STATE OF WASHINGTON
LICENSED
LANDSCAPE ARCHITECT

MATTHEW C. GURRAD
LICENSE NO. 1094
EXPIRES ON _____

NO.	DATE	BY	APPR.	REVISIONS

Approved By

TRANSPORTATION DESIGN MANAGER DATE
S. COSTA
PROJECT MANAGER DATE

M. GURRAD
DESIGNED BY DATE
J. FRYE
DRAWN BY DATE
G. LAI
CHECKED BY DATE

City of Bellevue
TRANSPORTATION DEPARTMENT

HDR

NE SPRING BLVD - ZONE 1B
90% DESIGN

IRRIGATION PLAN
BEGIN ZONE 1B TO STA. B 205+00

SHEET NAME **IR1**

SHT 44 OF 184

GENERAL NOTES:

1. UNLESS OTHERWISE NOTED, ALL DIMENSIONS ARE IN FEET.
2. SEE SHEET IRD1 FOR IRRIGATION LEGEND, ABBREVIATIONS, SCHEDULE AND NOTES.
3. SEE SHEETS IRD1 THROUGH IRD2 FOR IRRIGATION DETAILS.

SECTION 28, T. 25 N., R5E., W.M.
KING COUNTY

90% SUBMITTAL NOT FOR CONSTRUCTION

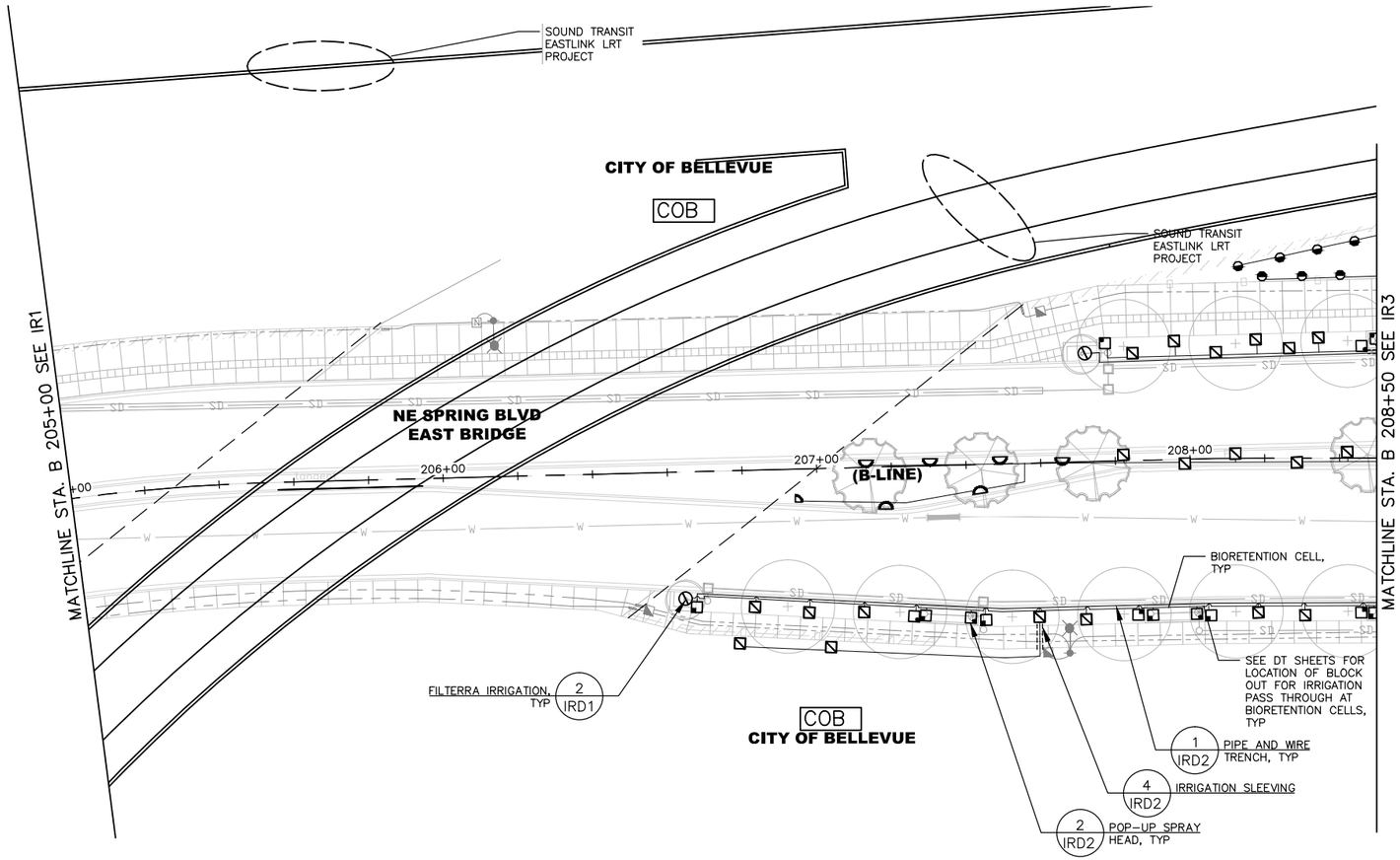

LEGEND:

SYMBOL	DESCRIPTION
	MP ROTATOR MP800SR 90-210 W/ HUNTER MPR40-15-CV
	MP ROTATOR MP800SR 90-210 W/ HUNTER MPR40-15-CV
	MP ROTATOR MP1000 90-210 W/ HUNTER MPR40-15-CV
	MP ROTATOR MP1000 90-210 W/ HUNTER MPR40-15-CV
	MP RIGHT STRIP MPRCS515 W/ HUNTER MPR40-12-CV
	MP LEFT STRIP MPLCS515 W/ HUNTER MPR40-12-CV
	FILTERRA IRRIGATION MP ROTATOR MP800SR 90-210 W/ HUNTER MPR40-15-CV
	IRRIGATION SLEEVING
	IRRIGATION LATERAL

IRRIGATION PIPE SIZE SCHEDULE

SYMBOL	DESCRIPTION	
	3/4"	SCHEDULE 40 PVC
	1"	SCHEDULE 40 PVC
	1 1/4"	SCHEDULE 40 PVC
	1 1/2"	SCHEDULE 40 PVC
	2"	SCHEDULE 40 PVC

KEY PLAN

SCALE 20 10 0 20 40

STATE OF WASHINGTON
LICENSED
LANDSCAPE ARCHITECT

MATTHEW C. GURRAD
LICENSE NO. 1094
EXPIRES ON _____

NO.	DATE	BY	APPR.	REVISIONS

Approved By

TRANSPORTATION DESIGN MANAGER DATE
S. COSTA
PROJECT MANAGER DATE

M. GURRAD DESIGNED BY DATE
J. FRYE DRAWN BY DATE
G. LAI CHECKED BY DATE

City of Bellevue
TRANSPORTATION DEPARTMENT

HDR

NE SPRING BLVD - ZONE 1B
90% DESIGN

IRRIGATION PLAN
STA. B 205+00 TO STA. B 208+50

SHEET NAME **IR2**

SHT 45 OF 184

GENERAL NOTES:

1. UNLESS OTHERWISE NOTED, ALL DIMENSIONS ARE IN FEET.
2. SEE SHEET IRD1 FOR IRRIGATION LEGEND, ABBREVIATIONS, SCHEDULE AND NOTES.
3. SEE SHEETS IRD1 THROUGH IRD2 FOR IRRIGATION DETAILS.

SECTION 28, T. 25 N., R5E., W.M.
KING COUNTY

90% SUBMITTAL NOT FOR CONSTRUCTION

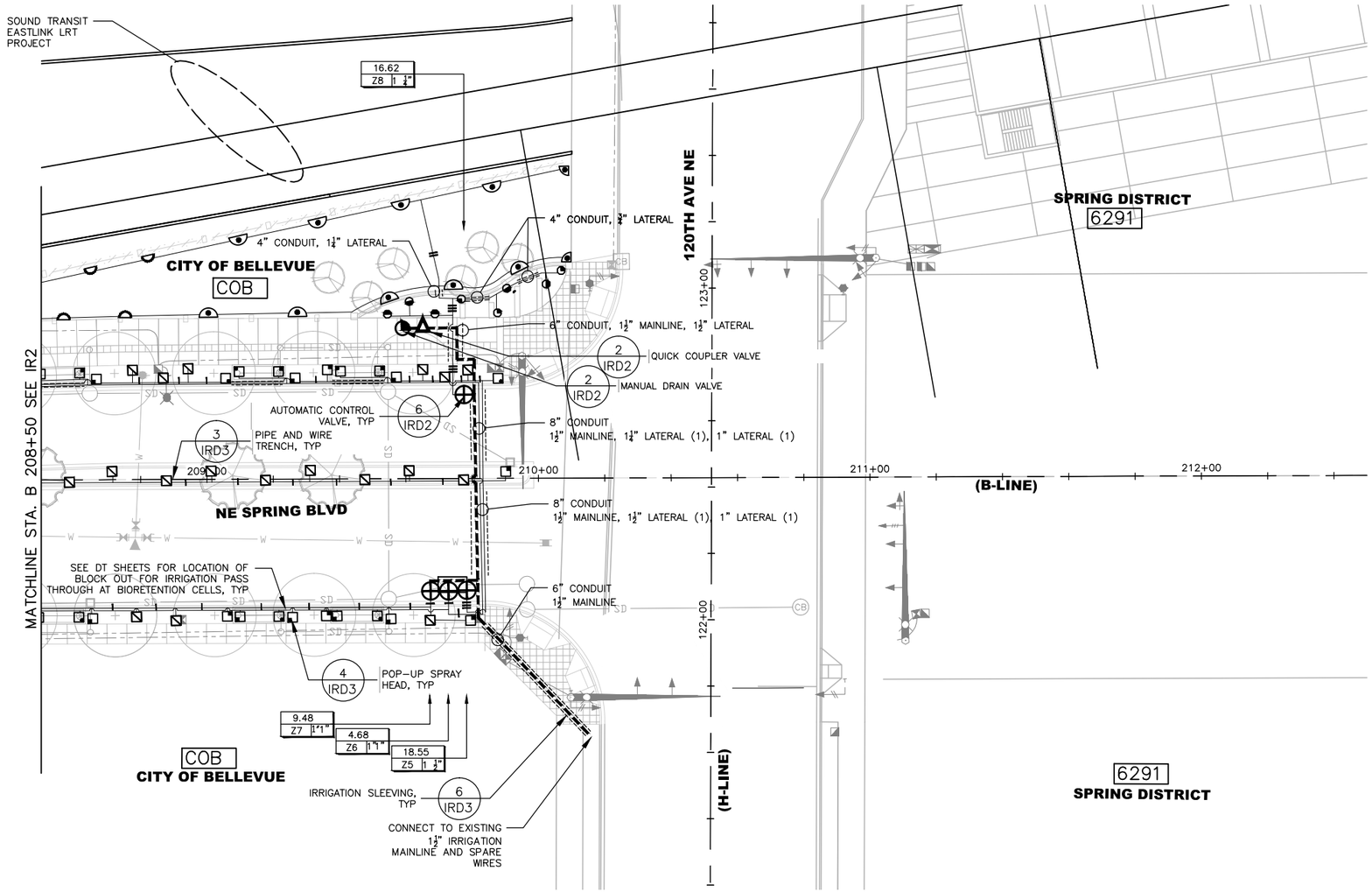

LEGEND:

SYMBOL	DESCRIPTION
	MP ROTATOR MP800SR 90–210 W/ HUNTER MPR40–15–CV
	MP ROTATOR MP800SR 90–210 W/ HUNTER MPR40–15–CV
	MP ROTATOR MP1000 90–210 W/ HUNTER MPR40–15–CV
	MP ROTATOR MP1000 90–210 W/ HUNTER MPR40–15–CV
	MP ROTATOR MP1000 360 W/ HUNTER MPR40–15–CV
	MP ROTATOR MP2000 90–210 W/ HUNTER MPR40–15–CV
	MP ROTATOR MP2000 90–210 W/ HUNTER MPR40–15–CV
	MP ROTATOR MP2000 360 W/ HUNTER MPR40–15–CV
	MP ROTATOR MP3000 90–210 W/ HUNTER MPR40–15–CV
	MP ROTATOR MP3000 90–210 W/ HUNTER MPR40–15–CV
	MP ROTATOR MP3000 210–360 W/ HUNTER MPR40–15–CV
	MP SIDE STRIP MPSS530 W/ HUNTER MPR40–12–CV
	MP SIDE STRIP MPRCS515 W/ HUNTER MPR40–12–CV
	MP RIGHT STRIP MPRCS515 W/ HUNTER MPR40–12–CV
	MP LEFT STRIP MPLCS515 W/ HUNTER MPR40–12–CV
	QUICK COUPLER VALVE
	AUTOMATIC CONTROL VALVE
	IRRIGATION SLEEVING
	IRRIGATION LATERAL
	IRRIGATION MAINLINE

IRRIGATION PIPE SIZE SCHEDULE

SYMBOL	DESCRIPTION	
	3/4"	SCHEDULE 40 PVC
	1"	SCHEDULE 40 PVC
	1 1/4"	SCHEDULE 40 PVC
	1 1/2"	SCHEDULE 40 PVC
	2"	SCHEDULE 40 PVC

KEY PLAN

20 10 0 20 40
SCALE

STATE OF WASHINGTON LICENSED LANDSCAPE ARCHITECT

MATTHEW C. GURRAD
LICENSE NO. 1094
EXPIRES ON _____

NO.	DATE	BY	APPR.	REVISIONS

Approved By

TRANSPORTATION DESIGN MANAGER DATE
S. COSTA
PROJECT MANAGER DATE

M. GURRAD DESIGNED BY DATE
J. FRYE DRAWN BY DATE
G. LAI CHECKED BY DATE

City of Bellevue
TRANSPORTATION DEPARTMENT

HDR

NE SPRING BLVD - ZONE 1B
90% DESIGN

IRRIGATION PLAN
STA. B 208+50 TO END ZONE 1B

SHEET NAME IR3

SHT 46 OF 184

IRRIGATION SCHEDULE

POP-UP SPRAY HEADS -OR- 5 IRD3 / 6 IRD3
SPRAY HEAD ON RISER

SYMBOL	DESCRIPTION	RADIUS	PRESSURE	GPM + 20%
	MP ROTATOR MP800SR 90-210 W/ HUNTER MPR40-15-CV	8'	40	0.19
	MP ROTATOR MP800SR 90-210 W/ HUNTER MPR40-15-CV	8'	40	0.38
	MP ROTATOR MP1000 90-210 W/ HUNTER MPR40-15-CV	14'	40	0.23
	MP ROTATOR MP1000 90-210 W/ HUNTER MPR40-15-CV	14'	40	0.44
	MP ROTATOR MP1000 360 W/ HUNTER MPR40-15-CV	14'	40	0.90
	MP ROTATOR MP2000 90-210 W/ HUNTER MPR40-15-CV	20'	40	0.48
	MP ROTATOR MP2000 90-210 W/ HUNTER MPR40-15-CV	19'	40	0.89
	MP ROTATOR MP2000 360 W/ HUNTER MPR40-15-CV	19'	40	1.76
	MP ROTATOR MP3000 90-210 W/ HUNTER MPR40-15-CV	30'	40	1.03
	MP ROTATOR MP3000 90-210 W/ HUNTER MPR40-15-CV	30'	40	2.18
	MP ROTATOR MP3000 210-360 W/ HUNTER MPR40-15-CV	30'	40	4.3
	MP SIDE STRIP MPSS530 W/ HUNTER MPR40-12-CV	5'X30'	40	0.53
	MP SIDE STRIP MPRCS515 W/ HUNTER MPR40-12-CV	5'X15'	40	0.26
	MP RIGHT STRIP MPRCS515 W/ HUNTER MPR40-12-CV	5'X15'	40	0.26
	MP LEFT STRIP MPLCS515 W/ HUNTER MPR40-12-CV	5'X15'	40	0.26
	MP ROTATOR MP800SR 90-210 W/ HUNTER MPR40-15-CV	8'	40	0.38

AUTOMATIC CONTROL VALVE SCHEDULE

VALVE #	SIZE	GPM
Z5	1 1/2"	18.55
Z6	1"	4.68
Z7	1"	9.48
Z8	1 1/2"	16.62

LATERAL PIPE SIZE LEGEND

3/4" — 1 1/4" — 2"
1" — 1 1/2"

ABBREVIATIONS

#	NUMBER
%	PERCENTAGE
&	AND
@	AT
APPROX	APPROXIMATE
℄	CENTER LINE
CONC	CONCRETE
CY	CUBIC YARDS
DIA	DIAMETER
DWG/ DWGS	DRAWING(S)
ENG	ENGINEER
EX	EXISTING
GPM	GALLONS PER MINUTE
HT	HEIGHT
IRRIG	IRRIGATION
LF	LINEAR FEET
MAX	MAXIMUM
MRF'S	MANUFACTURERS
MIN	MINIMUM
POC	POINT OF CONNECTION
PSI	POUNDS PER SQUARE INCH
PVC	POLYVINYL CHLORIDE
PRV	PRESSURE REGULATING VALVE
ROW	RIGHT OF WAY
SPECS	SPECIFICATIONS
STA	STATION
TYP	TYPICAL
WM	WATER METER
W/	WITH

4 IRD2 — SLEEVE
IRRIGATION SLEEVING (SCHED. 40 PVC, 6" DIA UNLESS LABELED OTHERWISE)

1 IRD2 — LATERAL LINE (SCHEDULE 40 PVC) SEE LATERAL PIPE SIZE LEGEND FOR SIZE

1 IRD2 — MAINLINE, (SCHED. 40 PVC) W/ SIZE

1 IRD1 — QUICK COUPLING VALVES AND COUPLERS. 1" BUCKNER QB5 LRC-10 QUICK COUPLING VALVE

VALVE CIRCUIT NO. — GPM / VALVE SIZE

6 IRD2 — BRASS AUTOMATIC CONTROL VALVES : WEATHERMATIC 8200 SERIES (SIZE PER AUTOMATIC CONTROL VALVE SCHEDULE)

5 IRD2 — CS — CURB STOP VALVE, MUELLER ORISEAL II

3 IRD2 — 3/4" DRAIN VALVE. PROVIDE OWNER W/ TWO (2) VALVE KEYS, MUELLER

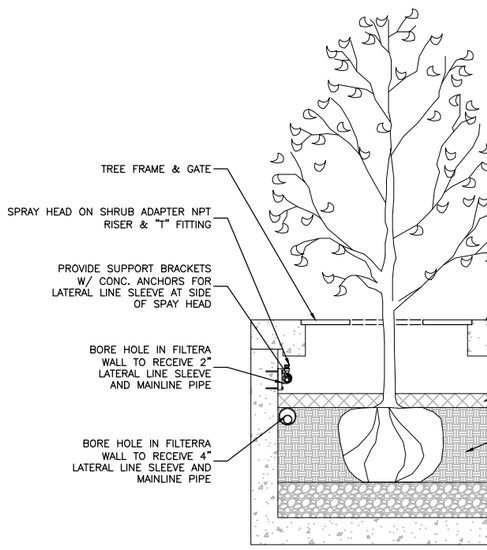

1 FILTERRA IRRIGATION
N.T.S

IRRIGATION NOTES

1. LOCATE QUICK COUPLING VALVE & AUTOMATIC CONTROL VALVES IN SHRUB/GROUNDCOVER AREAS AT POINT OF EASY ACCESS. ENGINEER TO REVIEW & APPROVE FINAL LOCATION OF ALL QUICK COUPLERS & AUTOMATIC CONTROL VALVES PRIOR TO INSTALLATION.
2. IRRIGATION SLEEVE, PIPE & TUBING SHALL BE ADJUSTED IN THE FIELD TO AVOID CONFLICTS WITH EXISTING SITE CONDITIONS, PLANT MATERIALS & ANY OTHER ITEMS DEEMED NECESSARY BY THE ENGINEER.
3. ESTIMATED STATIC P.S.I. ALONG NEW WATER MAIN AT IRRIGATION METER IS 95 PSI AND 65 GPM PROVIDED BY CITY OF BELLEVUE UTILITIES ON 1/24/2014. PRIOR TO INSTALLATION OF IRRIGATION SYSTEM, CONTRACTOR SHALL FIELD VERIFY EXISTING P.S.I. NOTIFY ENGINEER OF ANY DISCREPANCIES BETWEEN THE DESIGN P.S.I. & EXISTING P.S.I. PRIOR TO PROCEEDING WITH WORK.
4. SYSTEM DESIGNED TO 90 PSI AT IRRIGATION METER, 50 PSI AT AUTOMATIC CONTROL VALVE.
5. IRRIGATION CONTRACTOR SHALL COORDINATE IRRIGATION SLEEVE LOCATIONS WITH GENERAL CONTRACTOR.
6. DRAWING IS SCHEMATIC. ACTUAL LOCATIONS MAY VARY DUE TO PLANT MATERIALS, UTILITIES OR EXISTING CONDITIONS. IRRIGATION LATERAL LINES OR PRESSURE MAINLINES ARE SHOWN DIAGRAMMATICALLY. PLACEMENT OF LINES SHOULD BE ASSUMED TO BE IN PLANTING AREAS OR IN CONDUITS. EXACT LOCATION OF ALL EQUIPMENT SHALL BE FIELD VERIFIED TO AVOID CONFLICTS. HEAD PLACEMENT IS NOT DIAGRAMMATIC AND SHALL BE PLACED WITHIN +/- 6" OF LOCATION SHOWN ON PLANS.
7. ALL IRRIGATION HEAD NOZZLES SHALL BE MATCHED PRECIPITATION RATE (MPR) NOZZLES.
8. CONTRACTOR IS RESPONSIBLE FOR LOCATING UTILITIES PRIOR TO BEGINNING CONSTRUCTION.
9. ALL IRRIGATION SLEEVE TO BE STAKED IN THE FIELD & LOCATED ON DIMENSIONED "AS-BUILT" DRAWING TO ALLOW FUTURE LOCATION & USE.
10. AIR BLOW IRRIGATION SYSTEM THROUGH QUICK COUPLERS & DRAIN/SHUT-OFF VALVES TO WINTERIZE IRRIGATION SYSTEM TO BE INCLUDED IN FIRST AND SECOND YEAR PLANT ESTABLISHMENT PERIOD.
11. INSTALL LATERAL LINE AND/OR MAINLINE INSIDE SLEEVE PRIOR TO PAVING. FIELD VERIFY SLEEVE INSTALLATION LOCATIONS W/ ENGINEER PRIOR TO BEGINNING CONSTRUCTION.
12. PROVIDE TWO SYSTEM WIDE SPARE IRRIGATION CONTROL WIRES TO ALL AUTOMATIC CONTROL VALVE BOXES IN ADDITION TO THOSE NOTED ON DWG'S.
13. EXISTING IRRIGATION SYSTEMS LOCATED BACK OF SIDEWALK MAY BE IMPACTED BY CONSTRUCTION. CONTRACTOR SHALL RESTORE EXISTING IRRIGATION SYSTEMS IMPACTED BY CONSTRUCTION TO PRE-CONSTRUCTION CONDITION, PER "PROPERTY RESTORATION" FORCE ACCOUNT. SEE SPECS. FOR APPROXIMATE LOCATION OF EXISTING IRRIGATION SYSTEMS.
14. NOTIFY ENGINEER OF WORKING DAYS PRIOR TO COMPLETING ANY TIE-IN'S TO EXISTING IRRIGATION SYSTEMS FOR ENGINEER APPROVAL.

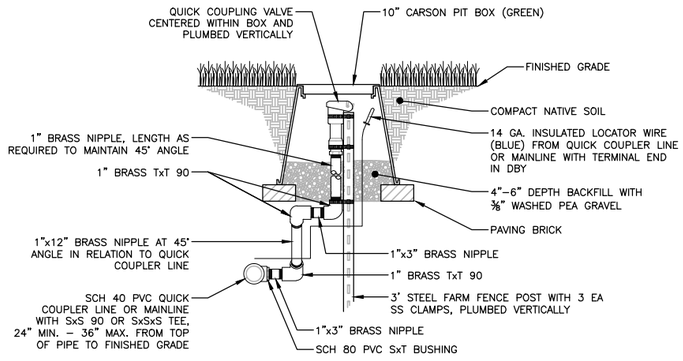

2 QUICK COUPLER VALVE
N.T.S

STATE OF WASHINGTON
LICENSED
LANDSCAPE ARCHITECT

MATTHEW C. GURRAD
LICENSE NO. 1094
EXPIRES ON _____

NO.	DATE	BY	APPR.	REVISIONS

Approved By

TRANSPORTATION DESIGN MANAGER — DATE
S. COSTA
PROJECT MANAGER — DATE

M. GURRAD — DESIGNED BY — DATE
J. FRYE — DRAWN BY — DATE
G. LAI — CHECKED BY — DATE

City of Bellevue
TRANSPORTATION DEPARTMENT

HDR

NE SPRING BLVD - ZONE 1B
90% DESIGN

IRRIGATION DETAILS

SHEET NAME IRD1

SHT 47 OF 184

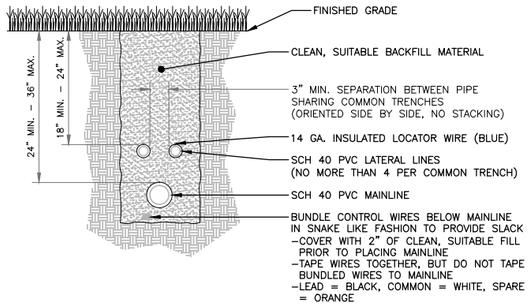

1 PIPE AND WIRE TRENCH

N.T.S

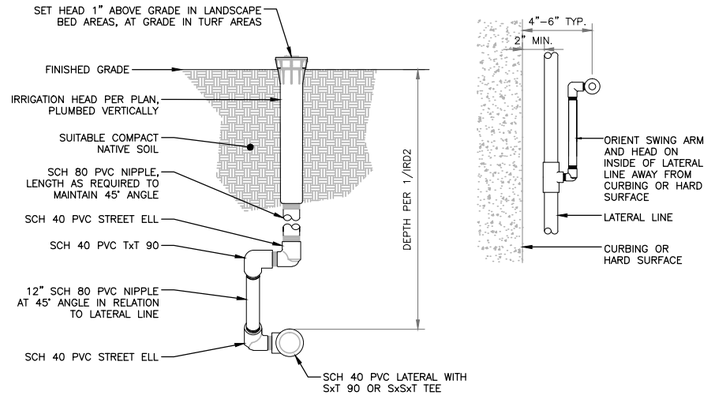

2 POP-UP SPRAY HEAD

N.T.S

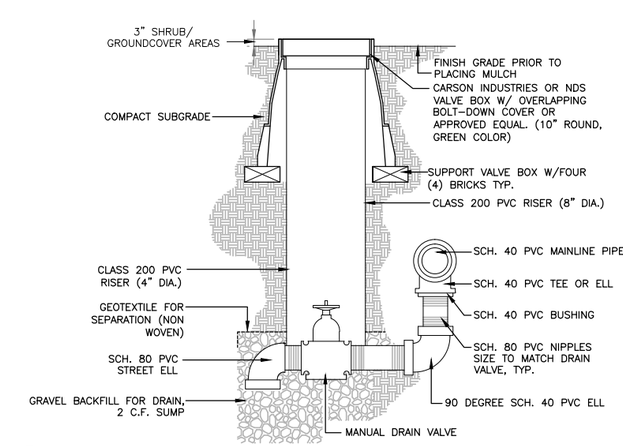

3 MANUAL DRAIN VALVE

N.T.S

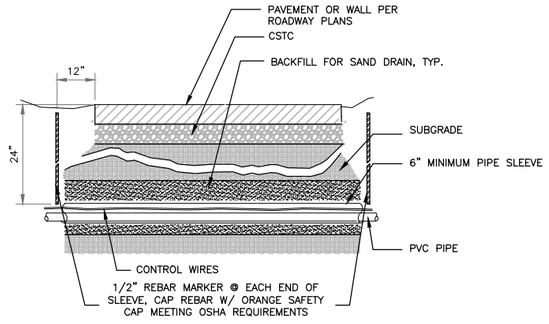

4 IRRIGATION SLEEVING

N.T.S

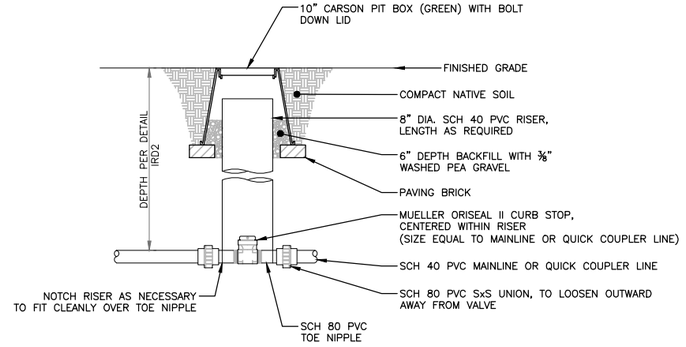

5 CURB STOP VALVE

N.T.S

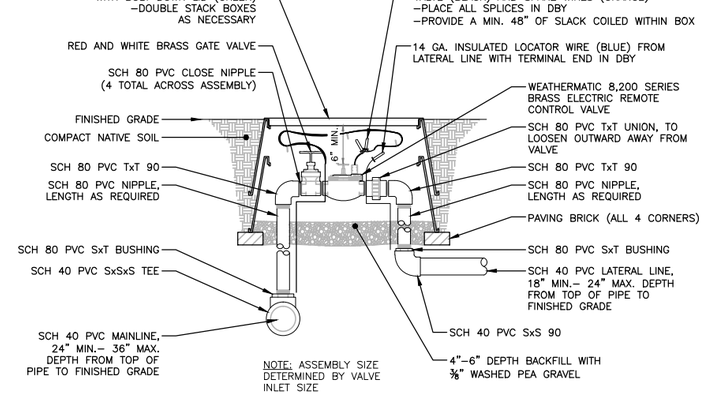

6 AUTOMATIC CONTROL VALVE

N.T.S

STATE OF WASHINGTON
LICENSED
LANDSCAPE ARCHITECT

MATTHEW C. GURRAD
LICENSE NO. 1094
EXPIRES ON _____

NO.	DATE	BY	APPR.	REVISIONS

Approved By

TRANSPORTATION DESIGN MANAGER DATE
S. COSTA
PROJECT MANAGER DATE

M. GURRAD	
DESIGNED BY	DATE
J. FRYE	
DRAWN BY	DATE
G. LAI	
CHECKED BY	DATE

City of Bellevue
TRANSPORTATION DEPARTMENT

HDR

NE SPRING BLVD - ZONE 1B
90% DESIGN

IRRIGATION DETAILS

SHEET NAME **IRD2**

SHT 48 OF 184

GENERAL NOTES:

1. UNLESS OTHERWISE NOTED, ALL DIMENSIONS ARE IN FEET.
2. SEE SHEET LSD1 FOR LANDSCAPE AND URBAN DESIGN LEGEND, ABBREVIATIONS, SCHEDULE AND NOTES.

SECTION 28, T. 25 N., R5E., W.M.
KING COUNTY

90% SUBMITTAL NOT FOR CONSTRUCTION

LANDSCAPE LEGEND

SYM	QTY	DESCRIPTION
	–	PATTERNED CONCRETE MEDIAN
▲	39	BOSTON IVY

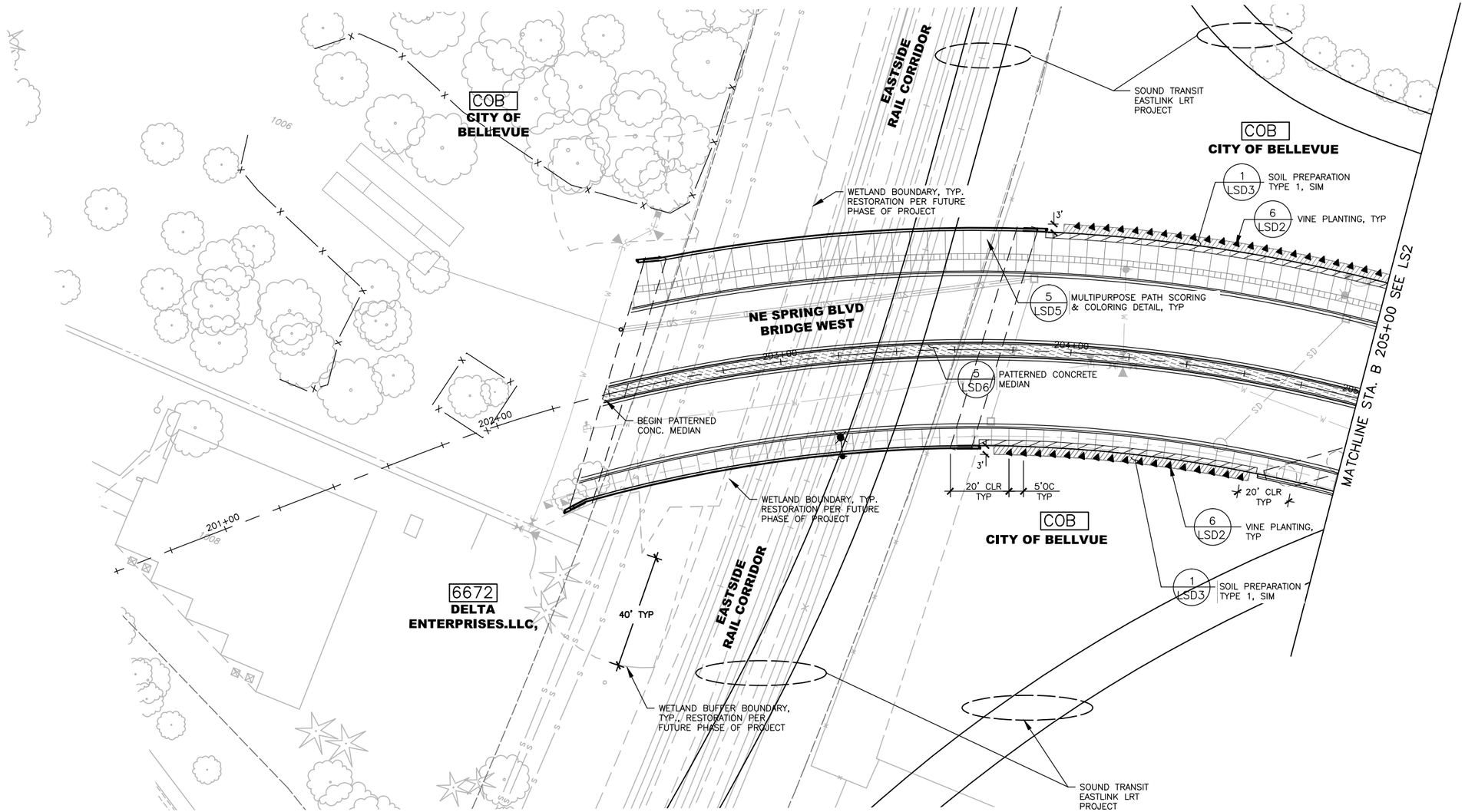

KEY PLAN

20 10 0 20 40
SCALE

STATE OF WASHINGTON
LICENSED
LANDSCAPE ARCHITECT

MATTHEW C. GURRAD
LICENSE NO. 1094
EXPIRES ON _____

NO.	DATE	BY	APPR.	REVISIONS

Approved By

TRANSPORTATION DESIGN MANAGER DATE
S. COSTA
PROJECT MANAGER DATE

M. GURRAD
DESIGNED BY DATE
J. FRYE
DRAWN BY DATE
G. LAI
CHECKED BY DATE

City of Bellevue
TRANSPORTATION DEPARTMENT

HDR

NE SPRING BLVD - ZONE 1B
90% DESIGN

LANDSCAPE & URBAN DESIGN PLAN
BEGIN ZONE 1B TO STA. B 205+00

SHEET NAME
LS1

SHT 49 OF 184

GENERAL NOTES:

1. UNLESS OTHERWISE NOTED, ALL DIMENSIONS ARE IN FEET.
2. SEE SHEET LSD1 FOR LANDSCAPE AND URBAN DESIGN LEGEND, ABBREVIATIONS, SCHEDULE AND NOTES.

SECTION 28, T. 25 N., R5E., W.M.
KING COUNTY

90% SUBMITTAL NOT FOR CONSTRUCTION

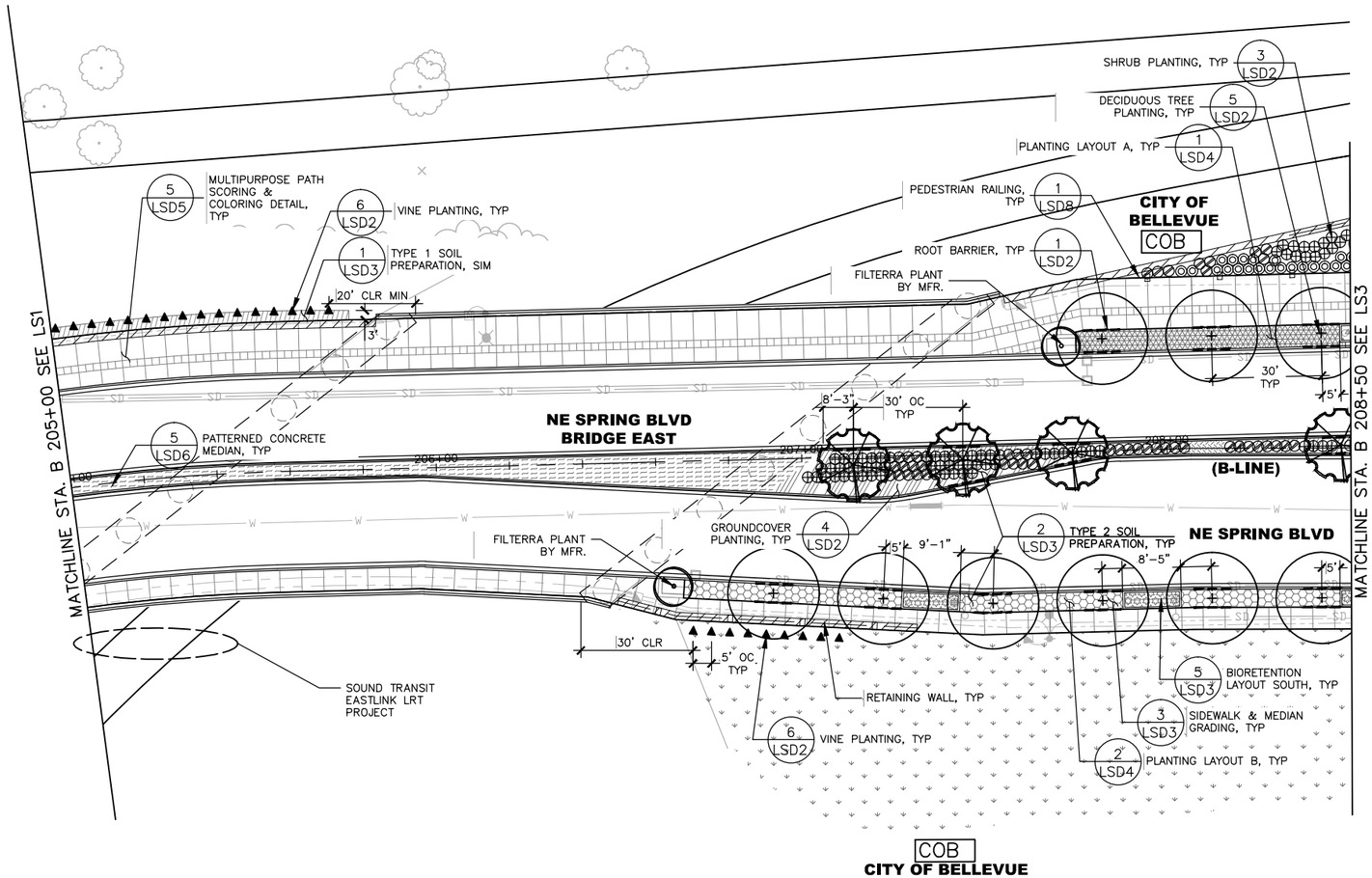

LANDSCAPE LEGEND

SYM	QTY	COMMON NAME
	9	MAIDENHAIR TREE
	4	SWEETGUM TREE
	2	VENUS DOGWOOD
	36	RUGOSA ROSE
	58	JAPANESE MOCK ORANGE
	19	EPIMEDIUM
		PLANTING LAYOUT A
	15	FOUNTAIN GRASS
	68	LOWFAST COTONEASTER
	8	HAPPY RETURNS DAYLILY
	106	CREEPING OREGON GRAPE
	20	DAVID VIBURNUM
	13	RUGOSA ROSE. 'WHITE PAVEMENT'
	13	RUGOSA ROSE 'SHOWY PAVEMENT'
		PLANTING LAYOUT B
	15	BEARS BREECH
	30	ASTILBE
	25	WOODS SPURGE
	60	CURLY RED LEUCOTHOE
	15	SPREADING LILYTURF
	3	FRAGRANT SWEETBOX
	138	SPREADING ENGLISH YEW
		BIORETENTION SOUTH
	44	NEW ZEALAND SEDGE
	10	KELSEY DOGWOOD
	72	COMMON RUSH
	0.25	SEEDING, FERTILIZING & MULCHING
	9	HAMELN FOUNTAIN GRASS
	283	LOWFAST CONTONEASTER
	25	BOSTON IVY
		PATTERNED CONCRETE MEDIAN
		ROOT BARRIER

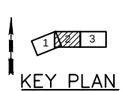

KEY PLAN

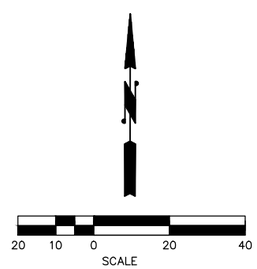

STATE OF WASHINGTON
LICENSED
LANDSCAPE ARCHITECT

MATTHEW C. GURRAD
LICENSE NO. 1094
EXPIRES ON _____

NO.	DATE	BY	APPR.	REVISIONS

Approved By

TRANSPORTATION DESIGN MANAGER DATE
S. COSTA
PROJECT MANAGER DATE

M. GURRAD DESIGNED BY DATE
J. FRYE DRAWN BY DATE
G. LAI CHECKED BY DATE

City of Bellevue
TRANSPORTATION DEPARTMENT

HDR

NE SPRING BLVD - ZONE 1B
90% DESIGN

LANDSCAPE & URBAN DESIGN PLAN
STA. B 205+00 TO STA. B 208+50

SHEET NAME **LS2**

SHT 50 OF 184

GENERAL NOTES:

1. UNLESS OTHERWISE NOTED, ALL DIMENSIONS ARE IN FEET.
2. SEE SHEET LSD1 FOR LANDSCAPE AND URBAN DESIGN LEGEND, ABBREVIATIONS, SCHEDULE AND NOTES.

SECTION 28, T. 25 N., R5E., W.M.
KING COUNTY

90% SUBMITTAL NOT FOR CONSTRUCTION

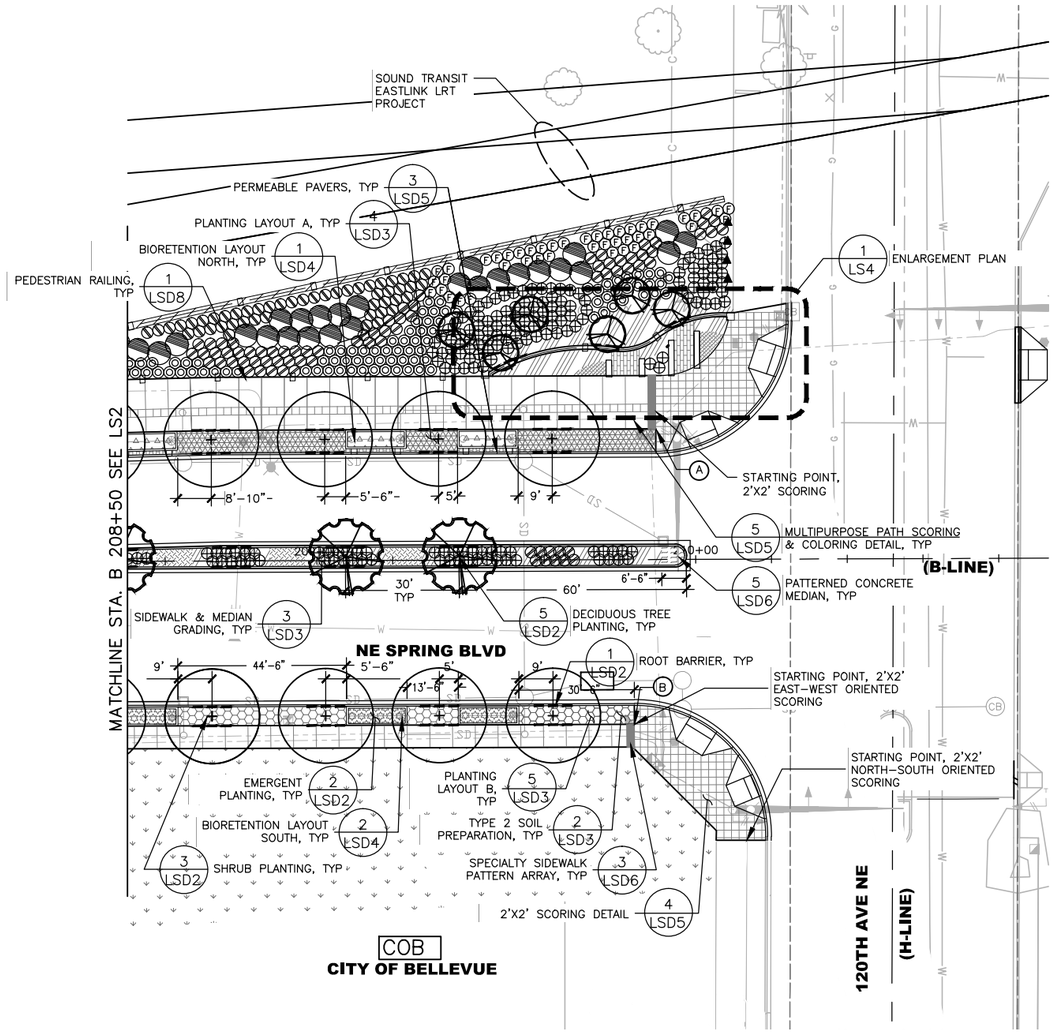

LANDSCAPE LEGEND

SYM	QTY	DESCRIPTION
	8	MAIDENHAIR TREE
	2	SWEETGUM TREE
	6	APPLE SERVICEBERRY
	76	RUGOSA ROSE
	173	JAPANESE MOCK ORANGE
	86	EPIMEDIUM
	26	CALIFORNIA WAX MYRTLE
	49	EVERGREEN HUCKLEBERRY
	43	CURLY RED LEUCOTHOE
		PLANTING LAYOUT A
	19	FOUNTAIN GRASS
	88	LOWFAST COTONEASTER
	10	HAPPY RETURNS DAYLILY
	138	CREEPING OREGON GRAPE
	26	DAVID VIBURNUM
	16	RUGOSA ROSE 'WHITE PAVEMENT'
	16	RUGOSA ROSE 'SHOWY PAVEMENT'
		PLANTING LAYOUT B
	9	BEARS BREECH
	18	ASTILBE
	15	WOODS SPURGE
	36	CURLY RED LEUCOTHOE
	9	SPREADING LILYTURF
	2	FRAGRANT SWEETBOX
	83	SPREADING ENGLISH YEW

SYM	QTY	DESCRIPTION
		BIORETENTION SOUTH
	66	ZEALAND SEDGE
	15	KELSEY DOGWOOD
	108	COMMON RUSH
		BIORETENTION NORTH
	60	DOUGLAS IRIS
	51	ORANGE NEW ZEALAND SEDGE
	114	CARMENS JAPANESE RUSH
	0.15	SEEDING, FERTILIZING & MULCHING
	24	DWARF FOUNTAIN GRASS
	137	LOWFAST CONTONEASTER
	37	HAMELN FOUNTAIN GRASS
	–	PATTERNED CONCRETE MEDIAN
	–	PERMEABLE PAVERS
	–	ROOT BARRIER
	–	SPECIALITY SIDEWALK PATTERN ARRAY

KEY PLAN

20 10 0 20 40
SCALE

STATE OF WASHINGTON
LICENSED
LANDSCAPE ARCHITECT

MATTHEW C. GURRAD
LICENSE NO. 1094
EXPIRES ON _____

NO.	DATE	BY	APPR.	REVISIONS

Approved By

TRANSPORTATION DESIGN MANAGER — DATE
S. COSTA
PROJECT MANAGER — DATE

M. GURRAD — DESIGNED BY — DATE
J. FRYE — DRAWN BY — DATE
G. LAI — CHECKED BY — DATE

City of Bellevue
TRANSPORTATION DEPARTMENT

HDR

NE SPRING BLVD - ZONE 1B
90% DESIGN

LANDSCAPE & URBAN DESIGN PLAN
STA. B 208+50 TO END ZONE 1B

SHEET NAME **LS3**

SHT 51 OF 184

GENERAL NOTES:

1. UNLESS OTHERWISE NOTED, ALL DIMENSIONS ARE IN FEET.
2. SEE SHEET LSD1 FOR LANDSCAPE AND URBAN DESIGN LEGEND, ABBREVIATIONS, SCHEDULE AND NOTES.
3. SEE SHEET LS3 FOR PLANTING PLAN

SECTION 28, T. 25 N., R5E., W.M.
KING COUNTY

90% SUBMITTAL NOT FOR CONSTRUCTION

LANDSCAPE LEGEND

SYM	DESCRIPTION
	PERMEABLE PAVERS
	SPECIALITY SIDEWALK PATTERN ARRAY

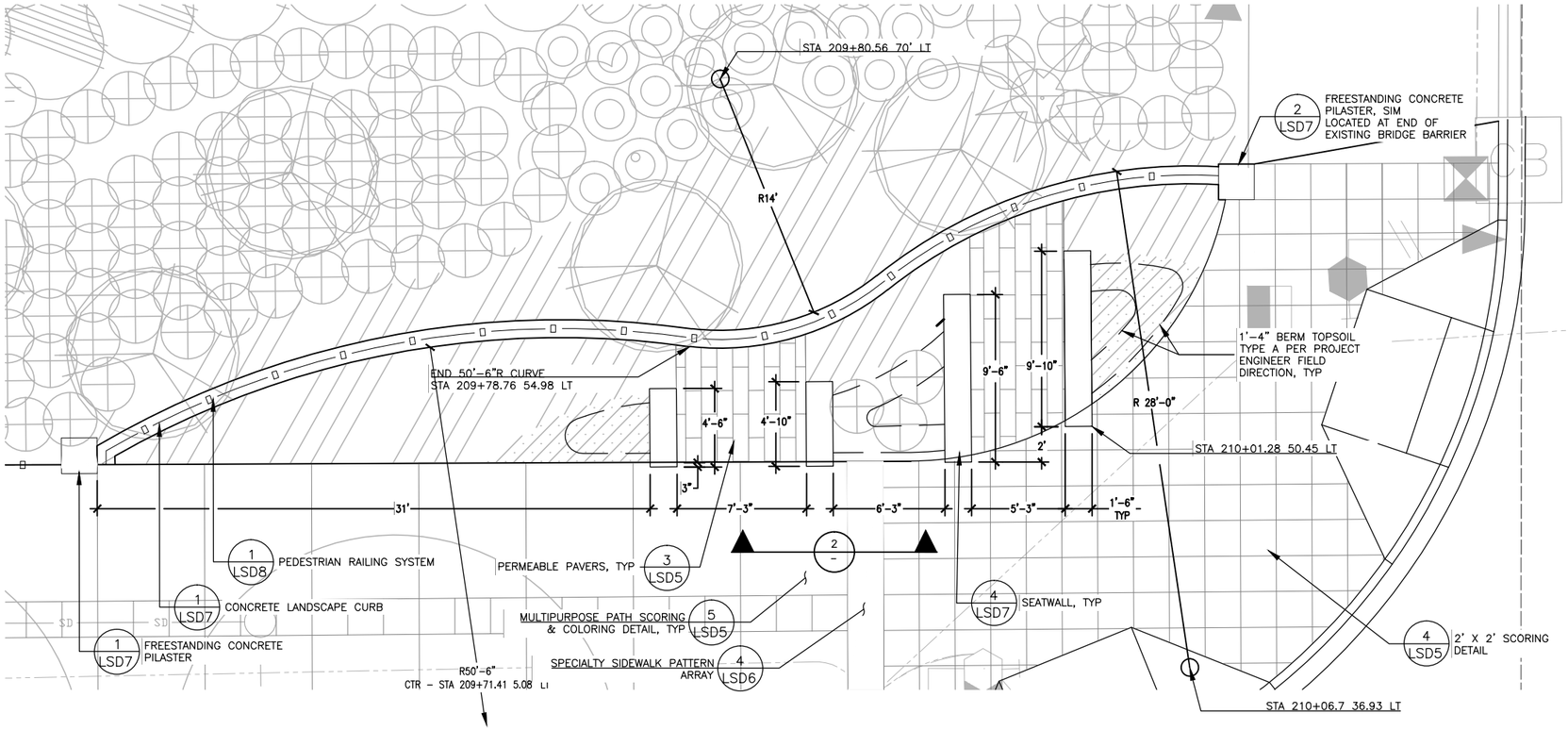

1 LANDSCAPE HARDSCAPE ENLARGEMENT PLAN
SCALE 1" = 4'-0"

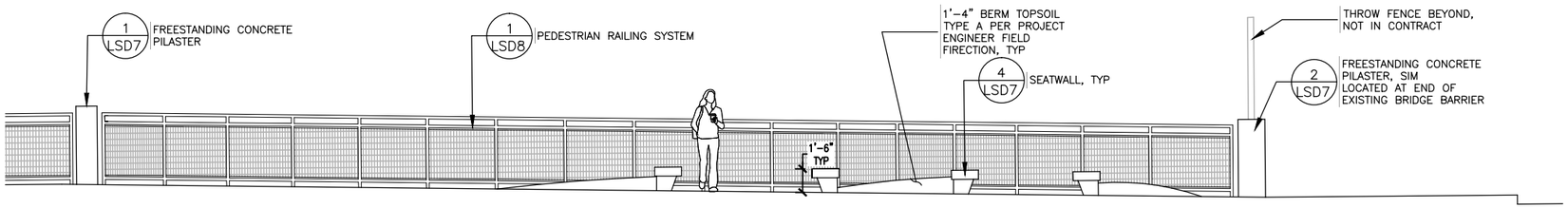

2 SECTION
SCALE 1" = 4'-0"

KEY PLAN

20 10 0 20 40
SCALE

STATE OF WASHINGTON
LICENSED
LANDSCAPE ARCHITECT

MATTHEW C. GURRAD
LICENSE NO. 1094
EXPIRES ON _____

NO.	DATE	BY	APPR.	REVISIONS

Approved By

TRANSPORTATION DESIGN MANAGER DATE
S. COSTA
PROJECT MANAGER DATE

M. GURRAD DESIGNED BY DATE
J. FRYE DRAWN BY DATE
G. LAI CHECKED BY DATE

City of Bellevue
TRANSPORTATION DEPARTMENT

HDR

NE SPRING BLVD - ZONE 1B
90% DESIGN

LANDSCAPE & URBAN DESIGN ENLARGEMENT PLAN

SHEET NAME **LS4**

SHT 52 OF 184

PLANTING SCHEDULE

SYM.	QTY.	SCIENTIFIC/COMMON NAME	SIZE/REMARKS
		TREES	
+	17	GINKO BILOBA 'MAGTAE'/ MAIDENHAIR TREE	3" CAL B&B; FULL, WELL BRANCHED & WELL ROOTED. STRAIGHT CENTRAL LEADER & SINGLE TRUNK. SYMMETRICAL BRANCHING HABIT. MIN. 6' BRANCHING HEIGHT. STREET TREE GRADE.
	6	LIQUIDAMBAR STYRACIFLUA 'WORPLESDON'/ SWEETGUM	3" CAL B&B; FULL, WELL BRANCHED & WELL ROOTED. STRAIGHT CENTRAL LEADER & SINGLE TRUNK. SYMMETRICAL BRANCHING HABIT.
	6	AMELANCHIER X GRANDIFLORA 'AUTUMN BRILLIANCE/ APPLE SERVICEBERRY	2" CAL, MULTI-STEM, THREE STEM MINIMUM, B&B; FULL, WELL BRANCHED & WELL ROOTED
	2	CORNUS X KOUSA 'VENUS / VENUS DOGWOOD	1 1/2" CAL, PROVIDED BY FILTERRA MFR.
		SHRUBS	
	26	MYRICA CALIFORNICA/ PACIFIC WAX MYRTLE	5 GAL. CONT.; FULL, WELL ROOTED & WELL BRANCHED, 5' OC.
	248	PITTOSPORUM TOBIRA 'WHEELER'S DWARF'/ JAPANESE MOCK ORANGE	3 GAL. CONT.; FULL, WELL ROOTED & WELL BRANCHED W/ 18" MIN. OFFSET FROM ADJACENT CURB OR PAVEMENT EDGE, 3' OC.
	61	ROSA RUGOSA 'SHOWY PAVEMENT'/ RUGOSA ROSE	2 GAL. CONT.; FULL, WELL ROOTED & WELL BRANCHED GRAFTED ON ROSA MULTIFLORA ROOTSTOCK. 18" MIN. OFFSET FROM ADJACENT CURB OR PAVEMENT EDGE. MIX TWO VARIETIES RANDOMLY.
	60	ROSA RUGOSA 'WHITE PAVEMENT'/ RUGOSA ROSE.	
	107	EPIMEDIUM RUBRUM / BARRENWORT	2 GAL CONT; FULL,WELL ROUTED SPACED 3' OC.
	49	VACCINIUM OVATUM / EVERGREEN HUCKLEBERRY	2 GAL CONT; FULL,WELL ROUTED SPACED 3' OC.
	43	LEUCOTHOE AXILLARIS 'CURLY RED'/ LEUCOTHOE	2 GAL CONT; FULL,WELL ROUTED SPACED 3' OC.
		ORNAMENTAL GRASSES	
	81	PENNISETUM ALOPECUROIDES 'HAMELN'/ FOUNTAIN GRASS	1 GAL. CONT.; FULL, WELL ROOTED. 24" OC TRIANGULAR SPACING
	15	PENNISETUM ALOPECUROIDES 'LITTLE BUNNY / LITTLE BUNNY DWARF FOUNTAIN GRASS	1 GAL. CONT.; FULL, WELL ROOTED. 18" OC TRIANGULAR SPACING
		GROUNDCOVERS	
	542	COTTONEASTER DAMMERI 'LOWFAST'/ LOWFAST COTTONEASTER	1 GAL. CONT.; FULL, WELL ROOTED. 24" OC TRIANGULAR SPACING
		VINES	
▲	60	PARTHENOCISSUS TRICUSPIDATA 'VEITCHII'/ BOSTON IVY	1 GAL. CONT., 5' OC. , PROVIDE 2 WATERING SUPPLEMENT PACKS FOR 1 GAL PLANT
		PLANTING MIX A	
	34	PENNISETUM ALOPECUROIDES 'HAMELN'/ FOUNTAIN GRASS	1 GAL. CONT.; FULL, WELL ROOTED, 18" OC.
	156	COTONEASTER DAMMERI 'LOWFAST'/ LOWFAST COTONEASTER	1 GAL. CONT.; FULL, WELL ROOTED, 18" OC TRIANGULAR SPACING
	17	HEMEROCALIS 'HAPPY RETURNS' / HAPPY RETURNS DAYLILY	1 GAL. CONT.; FULL, WELL ROOTED, 18" OC.
	244	MAHONIA REPENS / CREEPING OREGON GRAPE	2 GAL. CONT.; FULL, WELL ROOTED, 14" OC TRIANGULAR SPACING
	45	VIBURNUM DAVIDII/ DAVID VIBURNUM	2 GAL. CONT.; FULL, WELL ROOTED & WELL BRANCHED W/ 18" MIN. OFFSET FROM ADJACENT CURB OR PAVEMENT EDGE, 30" OC.
	28	ROSA RUGOSA 'SHOWY PAVEMENT'/ RUGOSA ROSE.	2 GAL. CONT.; FULL, WELL ROOTED & WELL BRANCHED GRAFTED ON ROSA MULTIFLORA ROOTSTOCK. 18" MIN. OFFSET FROM ADJACENT CURB OR PAVEMENT EDGE. MIX TWO VARIETIES RANDOMLY, 30" OC.
	23	ROSA RUGOSA 'WHITE PAVEMENT'/ RUGOSA ROSE	
	24	ACANTHUS MOLLIS / BEARS BREECH	1 GAL. CONT.; FULL, WELL ROOTED, 18" OC.
	39	ASTILBE CHINESIS VAR. / ASSORTED ASTILBE VARITIES	1 GAL. CONT.; FULL, WELL ROOTED, VARIETIES TO BE APPROVED BY ENGINEER PRIOR TO INSTALL., 18" OC.
	94	EUPHORBIA VAR ROBBIAE / WOODS SPURGE	1 GAL. CONT.; FULL, WELL ROOTED. 18" OC TRIANGULAR SPACING
	39	LECOUTHOE AXLILLARIS 'CURLY RED'/ CURLY RED LEUCOTHOE	2 GAL. CONT.; FULL, WELL ROOTED AND BRANCHED, 18" MIN. OFFSET FROM ADJACENT CURB OR PAVEMENT EDGE, 30" OC.
	219	LIRIOPE SPICATA / SPREADING LILYTURF	1 GAL. CONT.; FULL, WELL ROOTED. 16" OC TRIANGULAR SPACING.
	24	SARCOCCA RUSCIFOLIA / FRAGRANT SWEETBOX	3 GAL. CONT.; FULL, WELL ROOTED & WELL BRANCHED. 18" MIN. OFFSET FROM ADJACENT CURB OR PAVEMENT EDGE, 30" OC.
	47	TAXUS BACCATA 'REPANDENS'/ SPREADING ENGLISH YEW	5 GAL. CONT.; FULL, WELL ROOTED & WELL BRANCHED. 18" MIN. OFFSET FROM ADJACENT CURB OR PAVEMENT EDGE, 30" OC.
		BIORETENTION NORTH	
	60	IRIS DOUGLASIANA / DOUGLAS IRIS	1 GAL. CONT.; FULL, WELL ROOTED, 10" OC.
	51	CAREX TESTACEA / ORANGE NEW ZEALAND SEDGE	1 GAL. CONT.; FULL, WELL ROOTED,10" OC.
	114	JUNCUS PATENS 'CARMENS' / CARMENS JAPANESE RUSH	1 GAL. CONT.; FULL, WELL ROOTED, 10" OC.
		BIORETENTION SOUTH	
	110	CAREX TESTACEA / ORANGE NEW ZEALAND SEDGE	1 GAL. CONT.; FULL, WELL ROOTED, 10" OC.
	30	CORNUS SERICEA 'KELSEYII' / KELSEY DOGWOOD	1 GAL. CONT.; FULL, WELL ROOTED, 30" OC.
	180	JUNCUS EFFUSUS / COMMON RUSH	1 GAL. CONT.; FULL, WELL ROOTED, 10" OC.
		SEEDING	
	0.4	SEEDING, FERTILIZING AN MULCHING (ACRES)	

LANDSCAPE LEGEND

SYM.	DESCRIPTION
	PERMEABLE PAVERS
	PATTERNED CEMENT CONCRETE MEDIAN
	ROOT BARRIER
	SPECIALTY SIDEWALK PATTERN ARRAY

90% SUBMITTAL NOT FOR CONSTRUCTION

LANDSCAPE NOTES

1. PLANT MATERIAL LOCATIONS SHALL BE COORDINATED WITH IRRIGATION EQUIPMENT LOCATIONS TO AVOID ANY CONFLICTS.
2. LANDSCAPE CONTRACTOR SHALL BE RESPONSIBLE FOR ANY COORDINATION WITH SUBCONTRACTORS AS REQUIRED TO ACCOMPLISH PLANTING OPERATIONS.
3. LIMIT OF PROPERTY RESTORATION TREATMENT EQUAL TO TEMPORARY CONSTRUCTION EASEMENT AND/OR CUT AND FILL LIMIT – SEE RD DRAWINGS.
4. ANY DISCREPANCY W/ THE DRAWINGS AND/OR SPECS & SITE CONDITIONS SHALL BE BROUGHT TO THE ATTENTION OF THE ENGINEER PRIOR TO PROCEEDING W/ CONSTRUCTION.
5. THE CONTRACTOR IS RESPONSIBLE FOR LOCATING UTILITIES PRIOR TO BEGINNING CONSTRUCTION.
6. PLANT MATERIAL LOCATIONS SHALL BE COORDINATED W/ SPRINKLER IRRIGATION HEAD LOCATIONS TO AVOID ANY CONFLICTS.
7. CONTRACTOR SHALL FIELD STAKE TREE & SHRUB PLANTING LOCATIONS AND SPRAY PAINT GROUNDCOVER BEDS PRIOR TO PLANTING FOR ENGINEER REVIEW & APPROVAL.

ABBREVIATIONS

#	NUMBER	EQ	EQUAL
%	PERCENTAGE	EX	EXISTING
&	AND	5	EXPANSION JOINT
@	AT	GAL	GALLON
AC	ACRE	HSS	HOLLOW STEEL SECTION
ALG	ALIGN	HT	HEIGHT
APPROX	APPROXIMATE	LF	LINEAR FEET
B&B	BALLED AND BURLAPPED	MAX	MAXIMUM
C	CENTER LINE	MRF'S	MANUFACTURERS
CAL	CALIPER	MIN	MINIMUM
CONC	CONCRETE	OC	ON CENTER
CNJ	CONSTRUCTION JOINT	QTY	QUANTITY
CNT	CONTAINER	ROW	RIGHT OF WAY
℄	CONTROL JOINT	SPECS	SPECIFICATIONS
CTR	CENTER	SIM	SIMILAR
CY	CUBIC YARDS	SQ	SQUARE
DIA, ø	DIAMETER	SS	STAINLESS STEEL
DWG/DWGS	DRAWING(S)	STA	STATION
ELEV	ELEVATION	STL	STEEL
ENG	ENGINEER	TYP	TYPICAL
		W/	WITH

STATE OF WASHINGTON
LICENSED
LANDSCAPE ARCHITECT

MATTHEW C. GURRAD
LICENSE NO. 1094
EXPIRES ON _____

NO.	DATE	BY	APPR.	REVISIONS

Approved By

TRANSPORTATION DESIGN MANAGER DATE
S. COSTA
PROJECT MANAGER DATE

M. GURRAD
DESIGNED BY DATE
J. FRYE
DRAWN BY DATE
G. LAI
CHECKED BY DATE

City of Bellevue
TRANSPORTATION DEPARTMENT

HDR

NE SPRING BLVD - ZONE 1B
90% DESIGN

LANDSCAPE SCHEDULE, NOTES, ABBREVIATIONS & LEGEND

SHEET NAME **LSD1**

SHT 53 OF 184

GENERAL NOTES:
1. OTHERWISE NOTED, ALL DIMENSIONS ARE IN FEET AND INCHES.

90% SUBMITTAL NOT FOR CONSTRUCTION

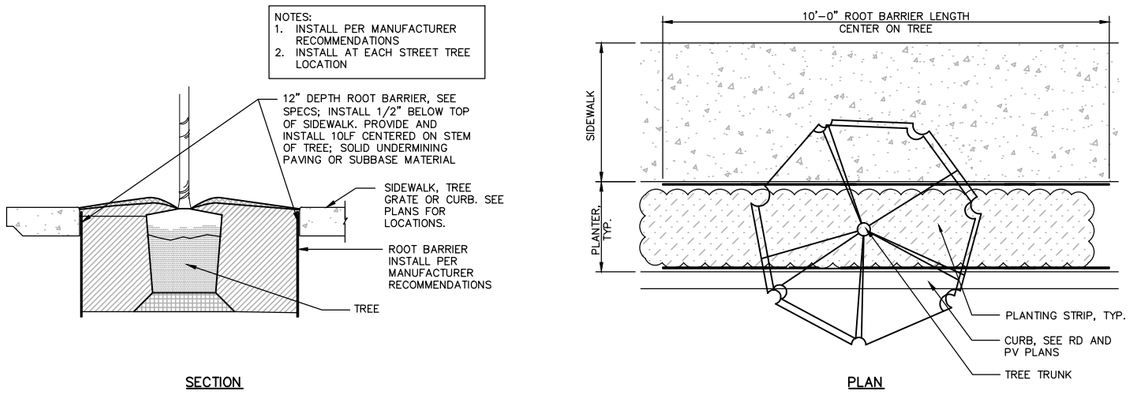

1 ROOT BARRIER
NOT TO SCALE

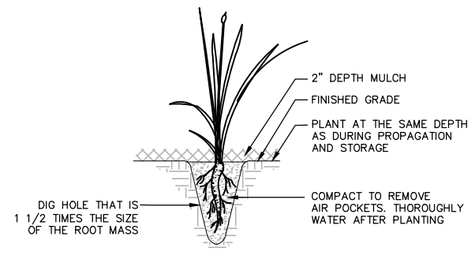

2 EMERGENT PLANTING
NOT TO SCALE

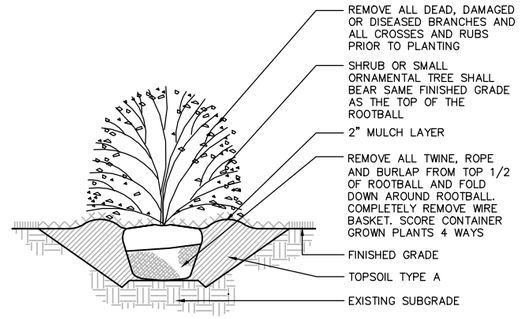

3 SHRUB PLANTING
NOT TO SCALE

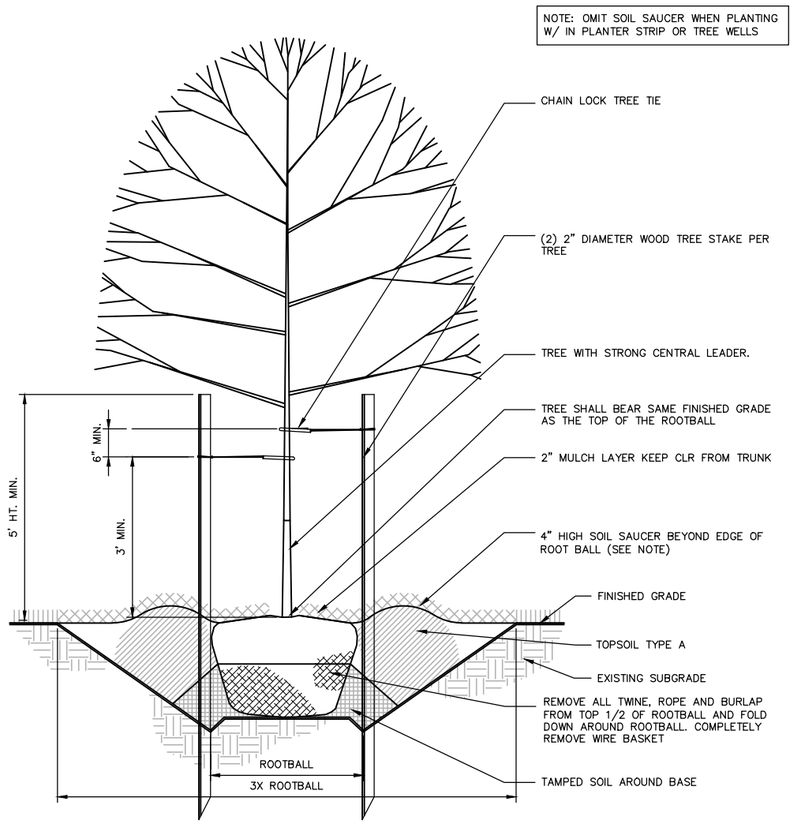

5 DECIDUOUS TREE PLANTING
NOT TO SCALE

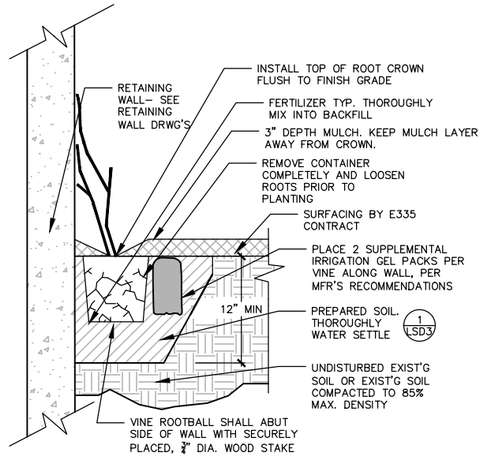

6 VINE PLANTING
NOT TO SCALE

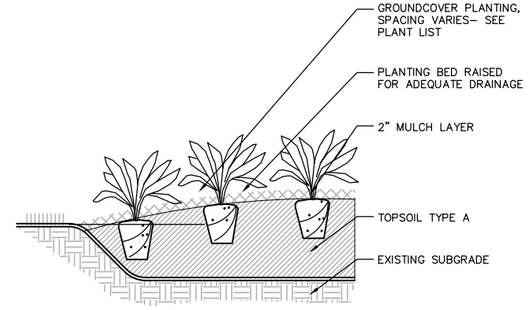

4 GROUNDCOVER PLANTING
NOT TO SCALE

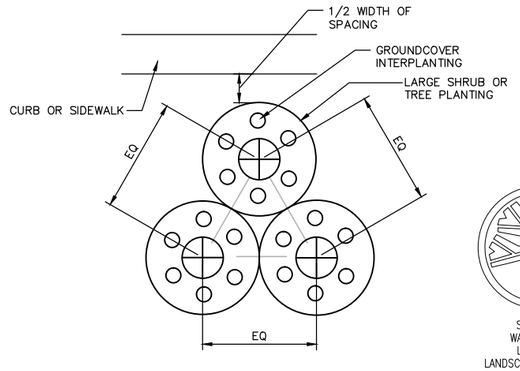

7 TRIANGULAR PLANT SPACING & INTERPLANTING
NOT TO SCALE

STATE OF WASHINGTON
LICENSED
LANDSCAPE ARCHITECT

MATTHEW C. GURRAD
LICENSE NO. 1094
EXPIRES ON _____

NO.	DATE	BY	APPR.	REVISIONS

Approved By

TRANSPORTATION DESIGN MANAGER — DATE
S. COSTA
PROJECT MANAGER — DATE

M. GURRAD — DESIGNED BY — DATE
J. FRYE — DRAWN BY — DATE
G. LAI — CHECKED BY — DATE

City of Bellevue
TRANSPORTATION DEPARTMENT

HDR

NE SPRING BLVD - ZONE 1B
90% DESIGN

LANDSCAPE DETAILS

SHEET NAME LSD2

SHT 54 OF 184

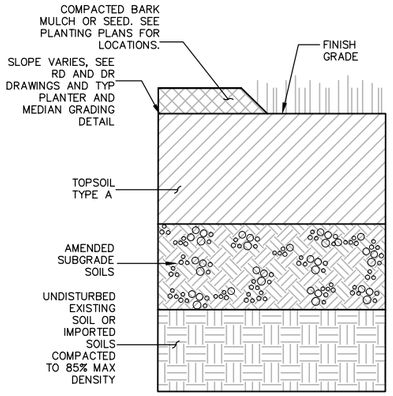

PLANTING AREA PREPARATION CONSTRUCTION SEQUENCE:

1. AFTER CONCRETE AND OTHER INFRASTRUCTURE WORK IS COMPLETED, ESTABLISH SUBGRADE 18" BELOW ADJACENT CURB OR PAVING IN MULCH AREAS AND 15" BELOW IN SEED AREAS.
2. REMOVE ALL DEBRIS INCLUDING STUMPS, STICKS, ROOTS AND ROCKS OVER 1" AND DISPOSE OFF SITE. ENG SHALL REVIEW AND APPROVE SUBGRADE PRIOR TO PROCEEDING WITH WORK.
3. PLACE 3" COMPACTED DEPTH OF FINE COMPOST, TILL INTO EXISTING SUBGRADE TO A DEPTH OF 6". COMPACT TO 85% MAXIMUM DRY DENSITY.
4. PLACE 12" DEPTH TOPSOIL TYPE A. COMPACT TO 85% MAXIMUM DRY DENSITY. ENG SHALL REVIEW AND APPROVE TOPSOIL INSTALLATION PRIOR TO PROCEEDING WITH WORK.
5. INSTALL 2" DEPTH OF COMPACTED BARK MULCH OR SEED PER PLANS.

1 TYPE 1 SOIL PREPARATION (BACK OF SIDEWALK)

NOT TO SCALE

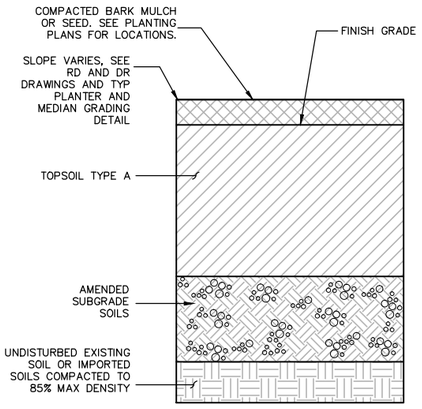

PLANTING AREA PREPARATION CONSTRUCTION SEQUENCE:

1. AFTER CONCRETE AND OTHER INFRASTRUCTURE WORK IS COMPLETED, ESTABLISH SUBGRADE 24" BELOW ADJACENT CURB OR PAVING IN MULCH AREAS.
2. REMOVE ALL DEBRIS INCLUDING STUMPS, STICKS, ROOTS AND ROCKS OVER 1" AND DISPOSE OFF SITE. ENG SHALL REVIEW AND APPROVE SUBGRADE PRIOR TO PROCEEDING WITH WORK.
3. PLACE 3" COMPACTED DEPTH OF FINE COMPOST, TILL INTO EXISTING SUBGRADE TO A DEPTH OF 6". COMPACT TO 85% MAXIMUM DRY DENSITY.
4. PLACE 21" DEPTH TOPSOIL TYPE A. COMPACT TO 85% MAXIMUM DRY DENSITY. ENG SHALL REVIEW AND APPROVE TOPSOIL INSTALLATION PRIOR TO PROCEEDING WITH WORK.
5. INSTALL 2" DEPTH OF COMPACTED BARK MULCH.

2 TYPE 2 SOIL PREPARATION (PLANTER STRIP)

NOT TO SCALE

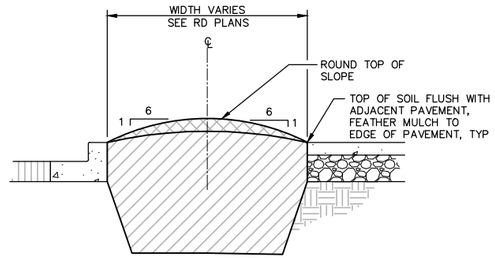

3 SIDEWALK AND MEDIAN GRADING

NOT TO SCALE

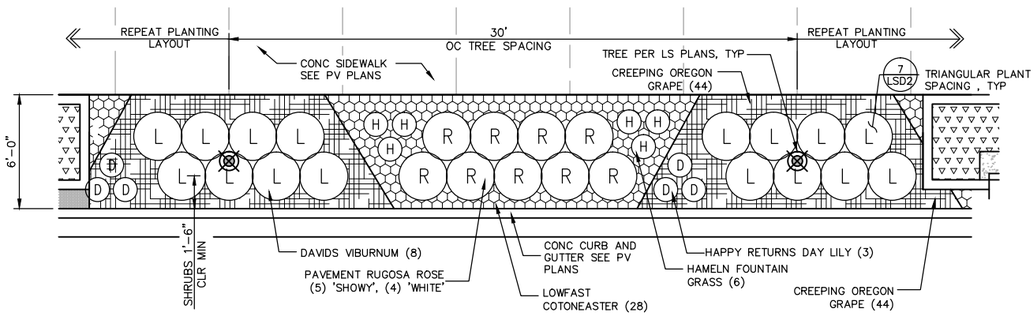

4 PLANTING LAYOUT A

SCALE 1/4" = 1'-0"

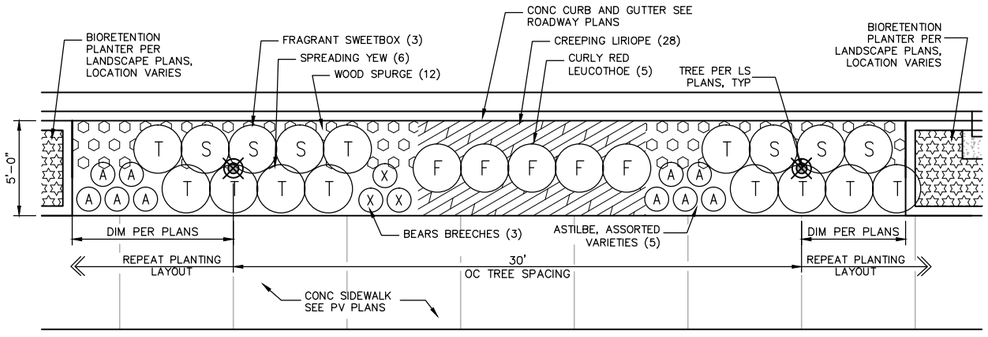

5 PLANTING LAYOUT B

SCALE 1/4" = 1'-0"

STATE OF WASHINGTON
LICENSED
LANDSCAPE ARCHITECT

MATTHEW C. GURRAD
LICENSE NO. 1094
EXPIRES ON _____

NO.	DATE	BY	APPR.	REVISIONS

Approved By

TRANSPORTATION DESIGN MANAGER — DATE
S. COSTA
PROJECT MANAGER — DATE

M. GURRAD
DESIGNED BY — DATE
J. FRYE
DRAWN BY — DATE
G. LAI
CHECKED BY — DATE

City of Bellevue
TRANSPORTATION DEPARTMENT

HDR

NE SPRING BLVD - ZONE 1B
90% DESIGN

LANDSCAPE DETAILS
SOIL PREPARATION & BIORETENTION LAYOUTS

SHEET NAME **LSD3**

SHT 55 OF 184

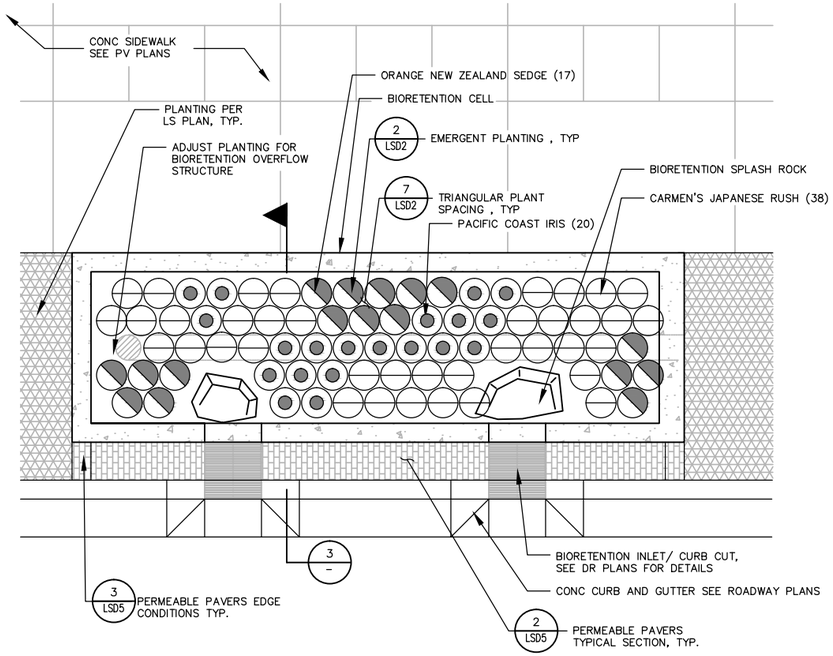

1 BIORETENTION LAYOUT NORTH - ENLARGEMENT

SCALE 1/2" = 1' 0"

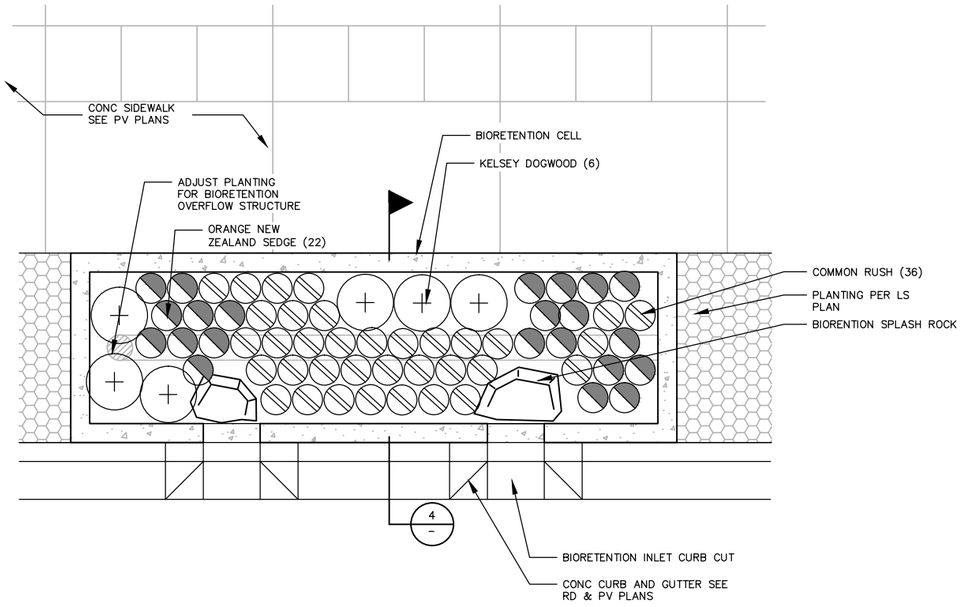

2 BIORETENTION LAYOUT SOUTH - ENLARGEMENT

SCALE 1/2" = 1' 0"

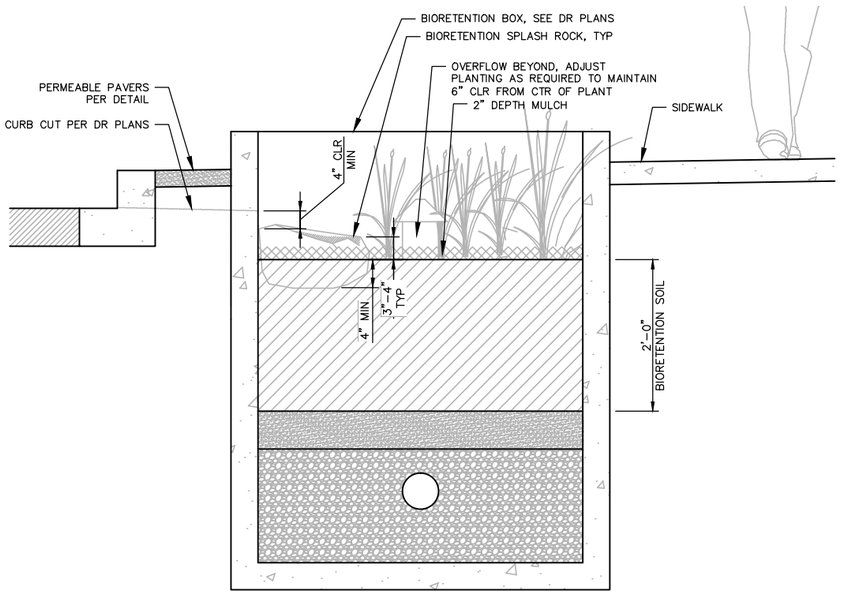

3 BIORETENTION LAYOUT SOUTH - SECTION

SCALE 1" = 1' 0"

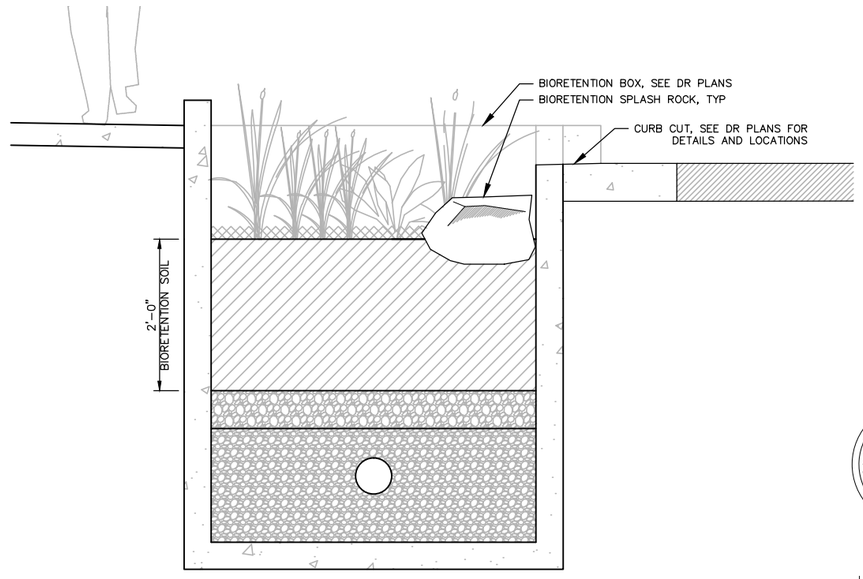

4 BIORETENTION LAYOUT SOUTH - SECTION

SCALE 1" = 1' 0"

STATE OF
WASHINGTON
LICENSED
LANDSCAPE ARCHITECT

MATTHEW C. GURRAD
LICENSE NO. 1094
EXPIRES ON _____

NO.	DATE	BY	APPR.	REVISIONS

Approved By

TRANSPORTATION DESIGN MANAGER — DATE
S. COSTA
PROJECT MANAGER — DATE

M. GURRAD
DESIGNED BY — DATE
J. FRYE
DRAWN BY — DATE
G. LAI
CHECKED BY — DATE

City of Bellevue
TRANSPORTATION DEPARTMENT

HDR

NE SPRING BLVD - ZONE 1B
90% DESIGN

LANDSCAPE DETAILS
TYPICAL PLANTING LAYOUTS

SHEET NAME **LSD4**

SHT 56 OF 184

90% SUBMITTAL NOT FOR CONSTRUCTION

GENERAL NOTES:

1. OTHERWISE NOTED, ALL DIMENSIONS ARE IN FEET AND INCHES.

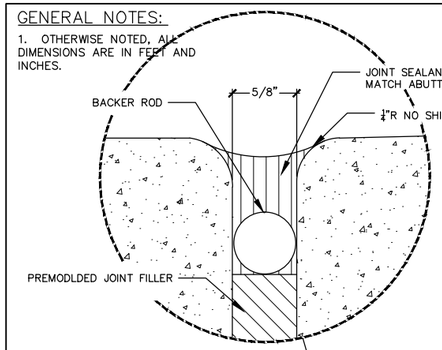

EXPANSION JOINT DETAIL

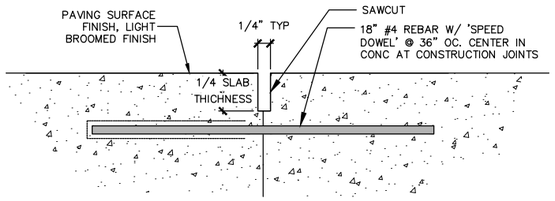

CONSTRUCTION JOINT

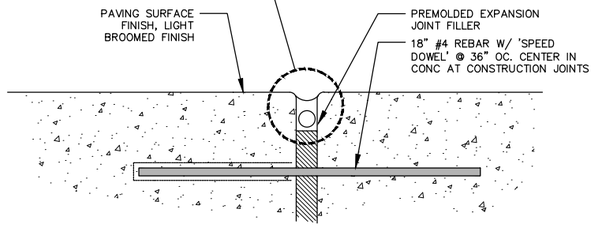

EXPANSION JOINT

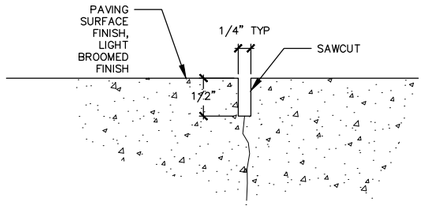

CONTROL JOINT

1 CEMENT CONCRETE SIDEWALK JOINTS

1/4" = 1'-0"

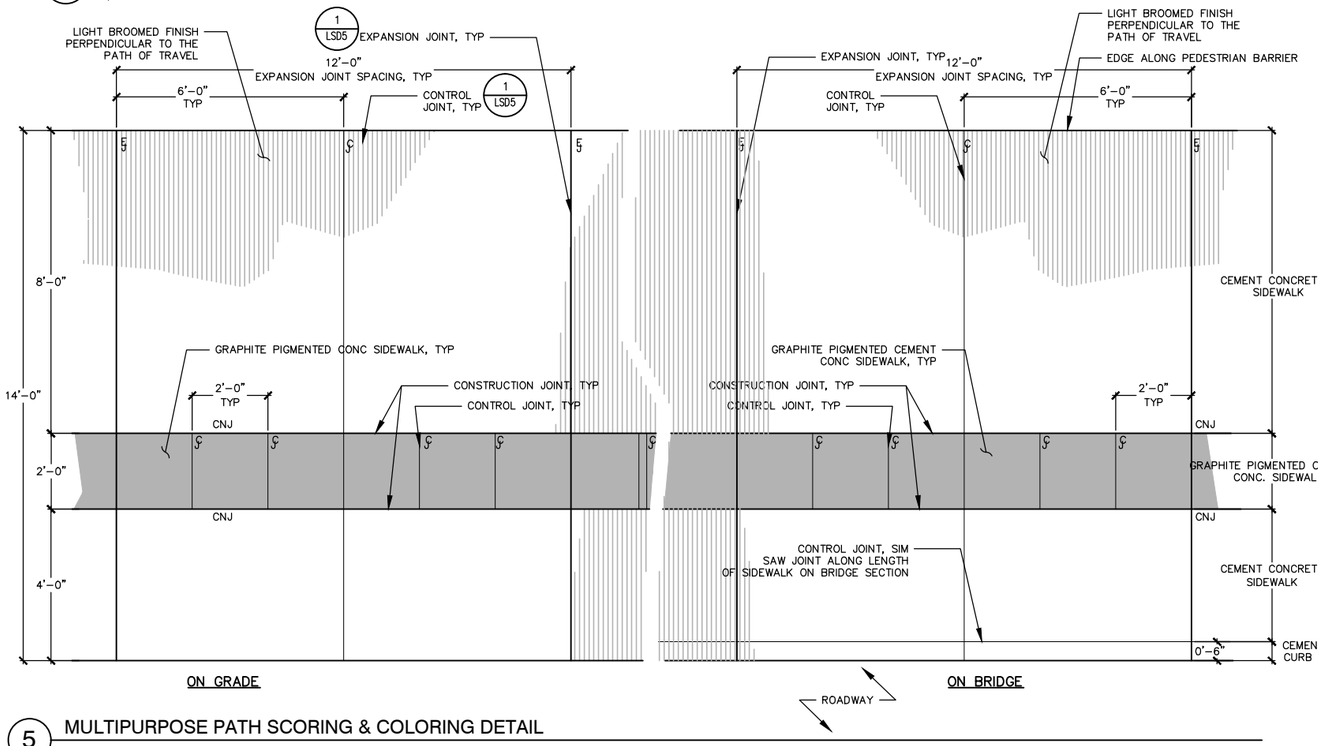

5 MULTIPURPOSE PATH SCORING & COLORING DETAIL

SCALE: 1/2" = 1' 0"

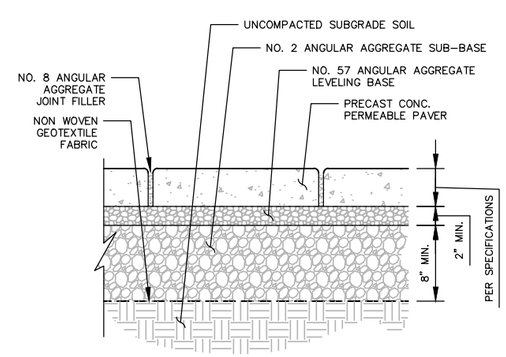

2 PERMEABLE PAVERS - TYPICAL SECTION

SCALE: 1 1/2"= 1' 0"

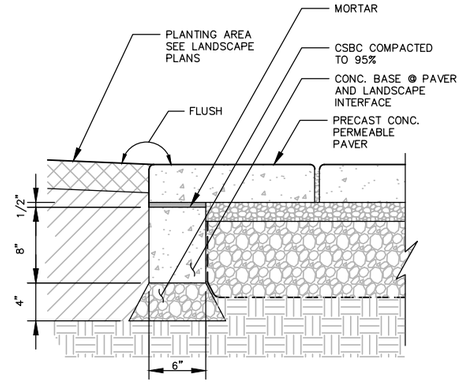

3 PERMEABLE PAVERS - EDGE CONDITION

SCALE: 1 1/2"= 1' 0"

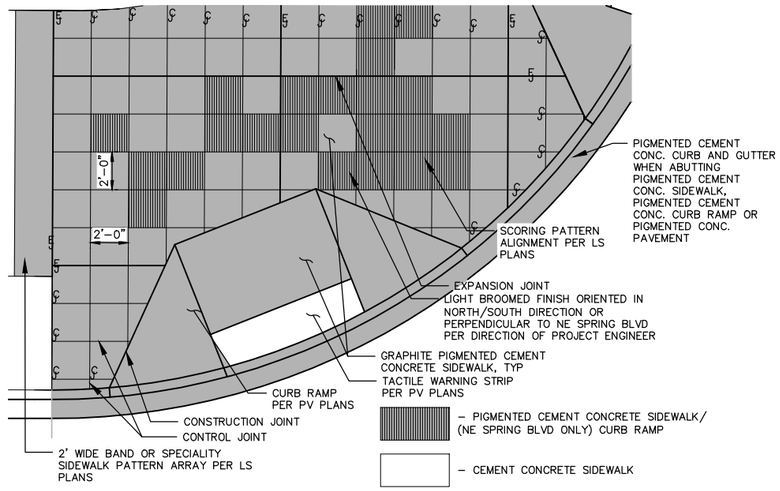

4 2' X 2' SCORING DETAIL

SCALE: 1/4" = 1' 0"

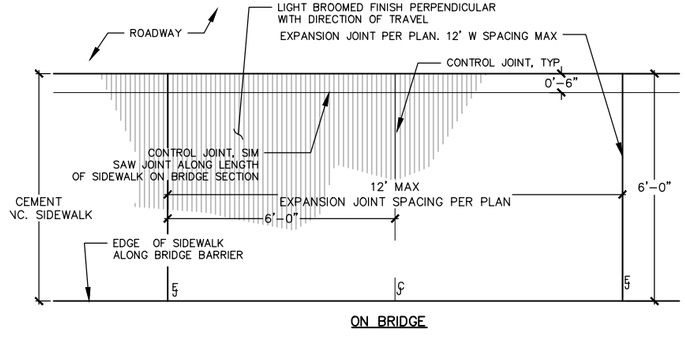

6 6' SCORING DETAIL

SCALE: 1/4" = 1' 0"

STATE OF WASHINGTON
LICENSED
LANDSCAPE ARCHITECT

MATTHEW C. GURRAD
LICENSE NO. 1094
EXPIRES ON _____

NO.	DATE	BY	APPR.	REVISIONS

Approved By

TRANSPORTATION DESIGN MANAGER — DATE
S. COSTA
PROJECT MANAGER — DATE

M. GURRAD — DESIGNED BY — DATE
J. FRYE — DRAWN BY — DATE
G. LAI — CHECKED BY — DATE

City of Bellevue
TRANSPORTATION DEPARTMENT

HDR

NE SPRING BLVD - ZONE 1B
90% DESIGN

URBAN DESIGN DETAILS
SPECIALTY PAVING

SHEET NAME LSD5

SHT 57 OF 184

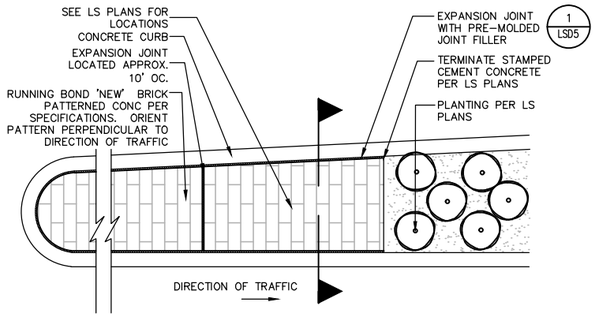

PLAN VIEW

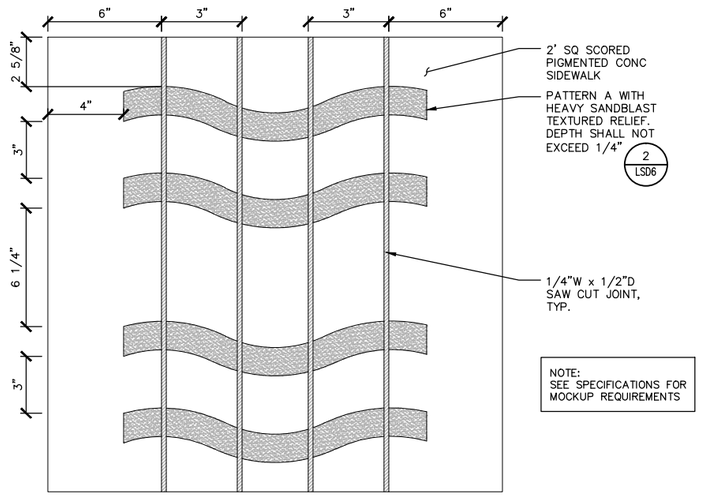

1 SPECIALTY SIDEWALK PATTERN LAYOUT
3" = 1'-0"

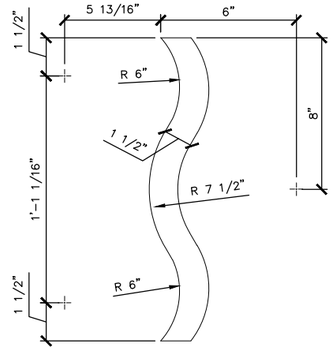

2 PATTERN A
3" = 1'-0"

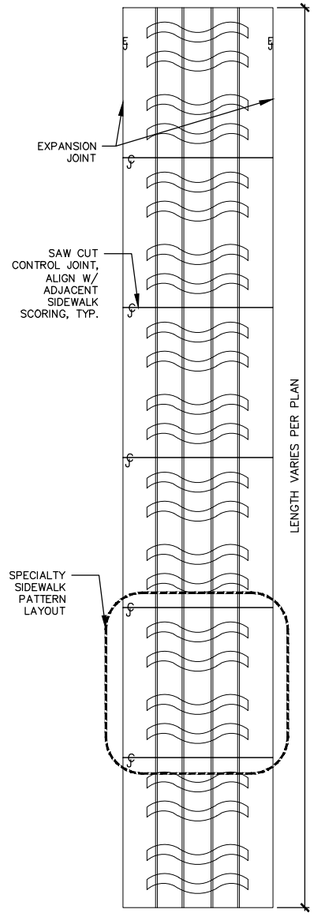

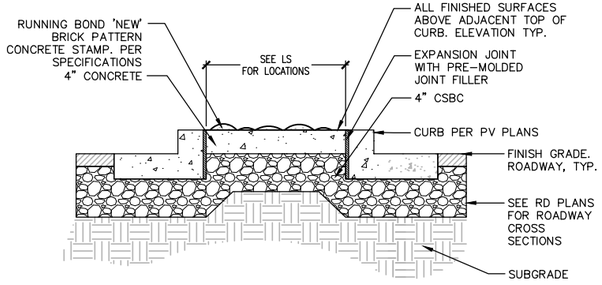

SECTION ON GRADE

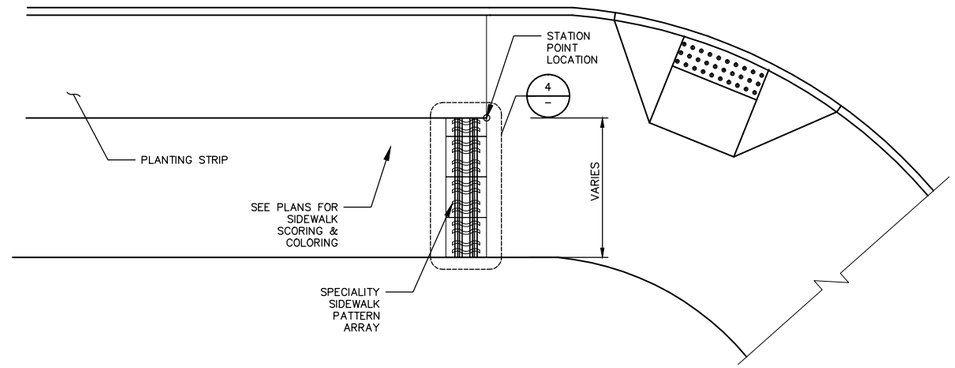

4 SPECIALTY SIDEWALK PATTERN ARRAY LAYOUT DIAGRAM
1/4" = 1'-0"

5 SPECIALTY SIDEWALK PATTERN ARRAY
1" = 1'-0"

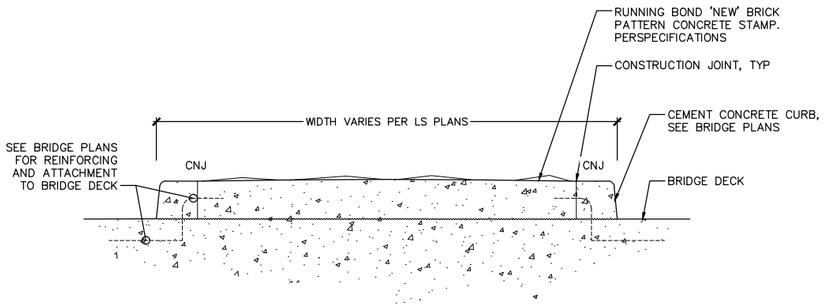

SECTION ON BRIDGE

3 PATTERNED CONCRETE MEDIAN
NOT TO SCALE

	STATION LOCATION	QTY (SF)
A	B-LINE 209+86.56 LT	28
B	B-LINE 209+83.70 RT	12

6 SPECIALTY SIDEWALK PATTERN LOCATION TABLE
NOT TO SCALE

STATE OF WASHINGTON
LICENSED
LANDSCAPE ARCHITECT

MATTHEW C. GURRAD
LICENSE NO. 1094
EXPIRES ON _____

NO.	DATE	BY	APPR.	REVISIONS

Approved By

TRANSPORTATION DESIGN MANAGER S. COSTA DATE
PROJECT MANAGER DATE

M. GURRAD DESIGNED BY DATE
J. FRYE DRAWN BY DATE
G. LAI CHECKED BY DATE

City of Bellevue
TRANSPORTATION DEPARTMENT

HDR

NE SPRING BLVD - ZONE 1B
90% DESIGN

URBAN DESIGN DETAILS
SPECIALTY PAVING

SHEET NAME LSD6

SHT 58 OF 184

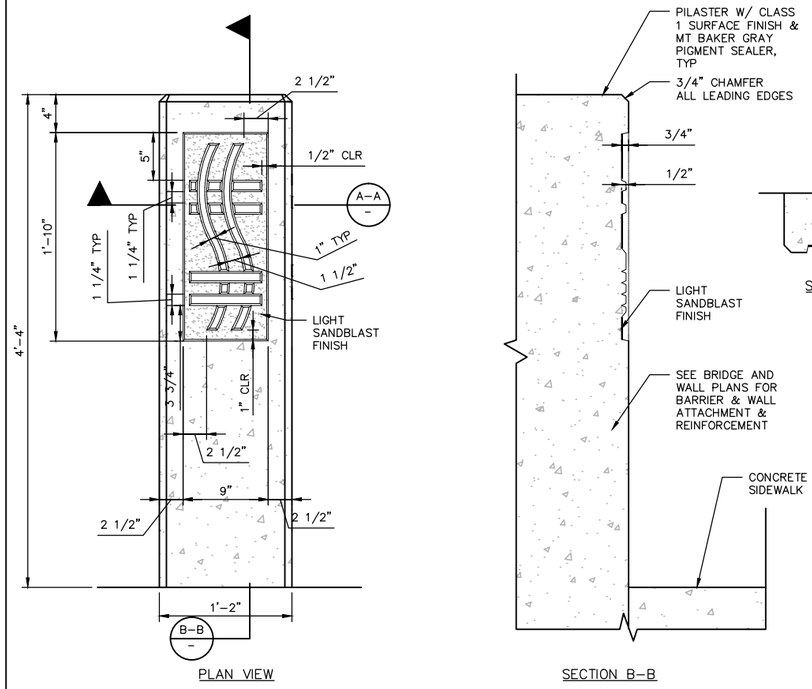

1 CONCRETE PILASTER @ BARRIER

SCALE 1 1/2" = 1'–0"

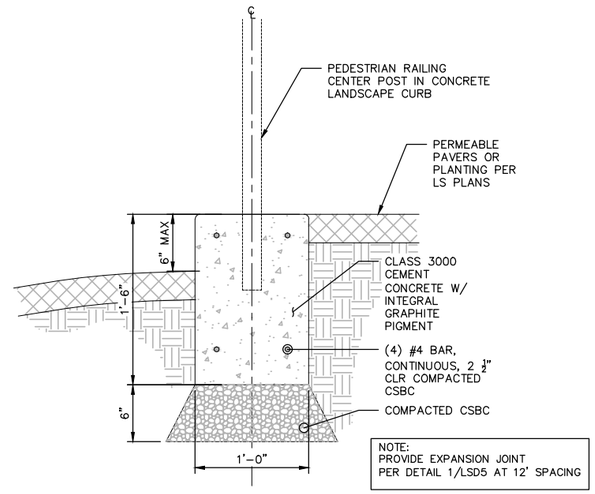

2 CONCRETE LANDSCAPE CURB

SCALE 1 1/2" = 1'–0"

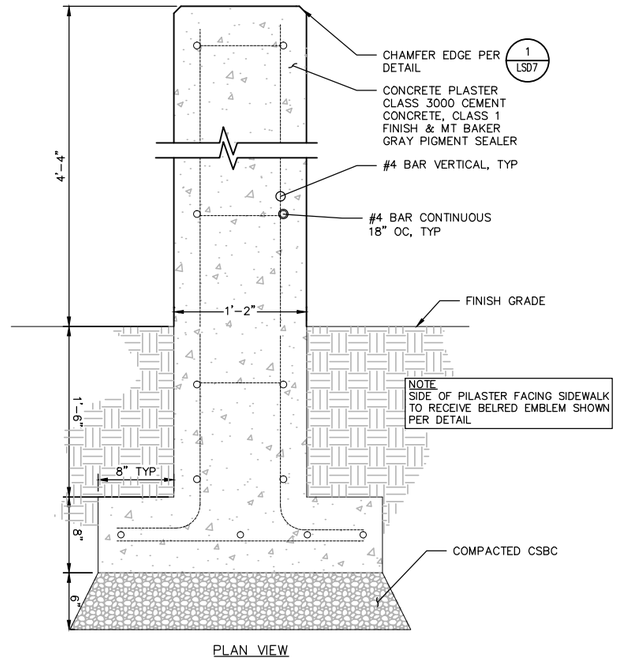

3 FREESTANDING CONCRETE PILASTER

SCALE 1 1/2" = 1'–0"

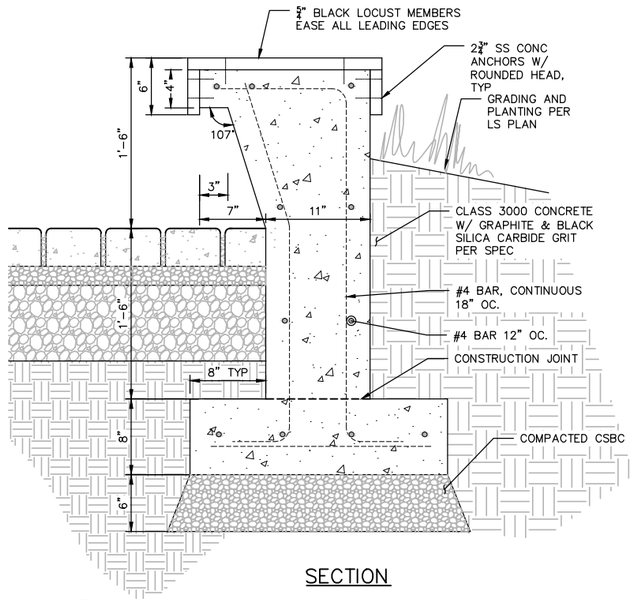

4 SEATWALL, TYP

SCALE 1 1/2" = 1'–0"

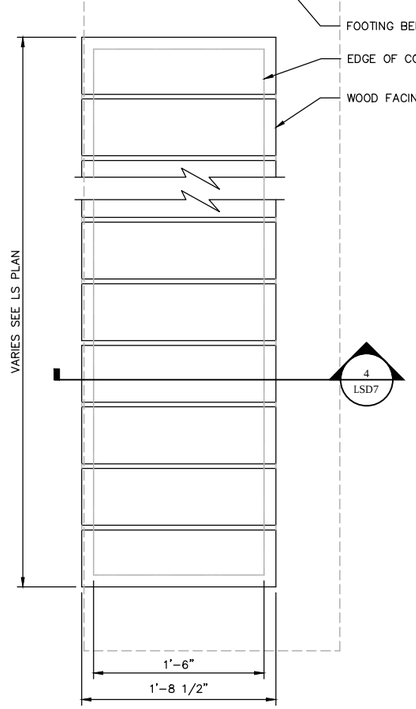

STATE OF WASHINGTON
LICENSED
LANDSCAPE ARCHITECT

MATTHEW C. GURRAD
LICENSE NO. 1094
EXPIRES ON _____

NO.	DATE	BY	APPR.	REVISIONS

Approved By

TRANSPORTATION DESIGN MANAGER — DATE
S. COSTA
PROJECT MANAGER — DATE

M. GURRAD
DESIGNED BY — DATE
J. FRYE
DRAWN BY — DATE
G. LAI
CHECKED BY — DATE

City of Bellevue
TRANSPORTATION DEPARTMENT

HDR

NE SPRING BLVD - ZONE 1B
90% DESIGN

URBAN DESIGN DETAILS
WALL FINISH & BARRIER TREATMENTS

SHEET NAME **LSD7**

SHT 59 OF 184

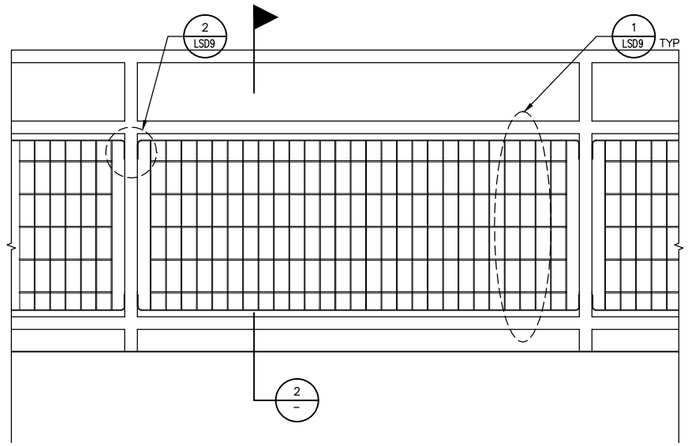

1 PEDESTRIAN RAILING SYSTEM
NOT TO SCALE

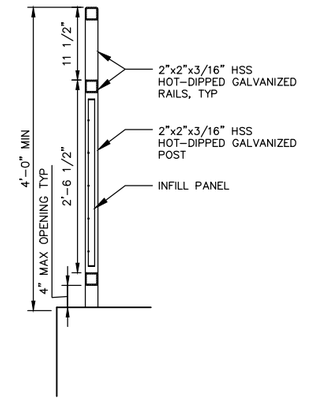

2 SECTION
PEDESTRIAN RAILING SYSTEM
NOT TO SCALE

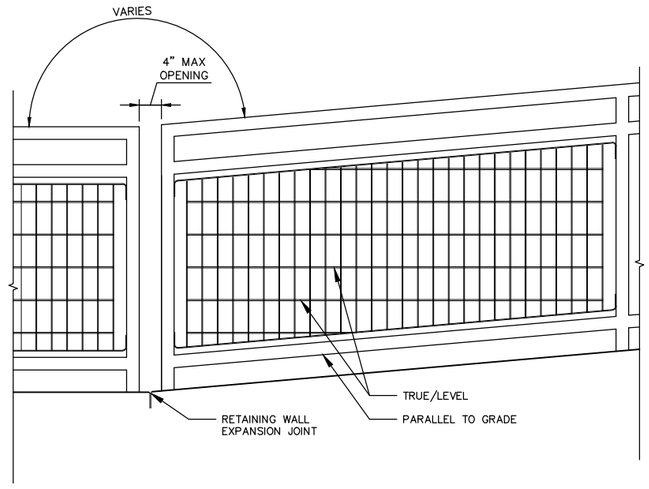

3 TYPICAL ELEVATION @ GRADE CHANGE
OR WALL EXPANSION JOINT
NOT TO SCALE

STATE OF WASHINGTON
LICENSED
LANDSCAPE ARCHITECT

MATTHEW C. GURRAD
LICENSE NO. 1094
EXPIRES ON _____

NO.	DATE	BY	APPR.	REVISIONS

Approved By

TRANSPORTATION DESIGN MANAGER DATE
S. COSTA
PROJECT MANAGER DATE

M. GURRAD
DESIGNED BY DATE
J. FRYE
DRAWN BY DATE
G. LAI
CHECKED BY DATE

City of Bellevue
TRANSPORTATION DEPARTMENT

HDR

NE SPRING BLVD - ZONE 1B
90% DESIGN

URBAN DESIGN DETAILS
PEDESTRIAN RAILINGS

SHEET NAME LSD8

SHT 60 OF 184

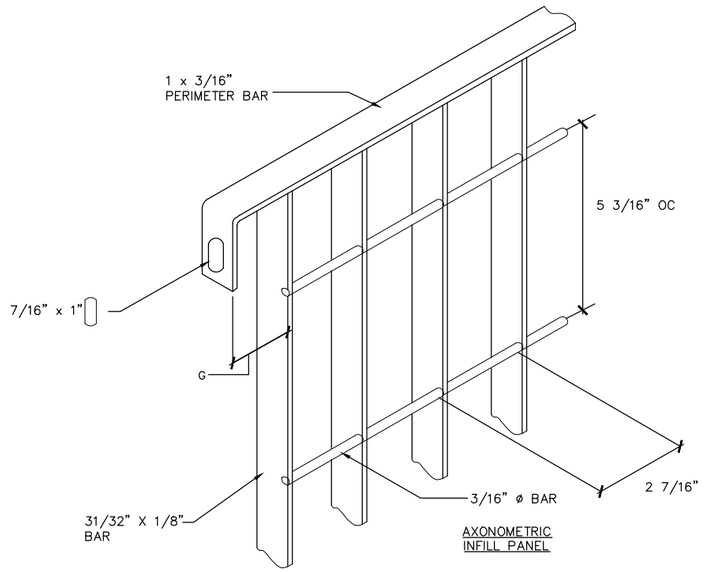

AXONOMETRIC
INFILL PANEL

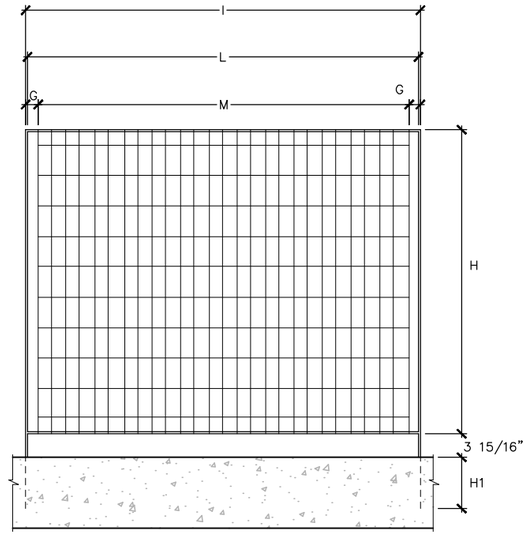

ELEVATION

H	PANEL HEIGHT	PER DETAIL 2/LSD8
H1	ANCHOR LENGTH*	8" DEPTH
I	POST WIDTH	78–3/4" MAXIMUM
L	PANEL WIDTH	78–7/16" MAXIMUM
M	WIDTH OF GRILLE	73–11/32" MAXIMUM
G	LUG PROJECTION	2–7/16" MAXIMUM
	POST SIZE*	2" X 2" SQUARE TUBE OVER 96" HIGH

*FINAL DETERMINATION OF ANCHOR LENGTH AND POST SIZE IS BASED ON PANEL SIZE, SITE CONDITIONS AND DESIGN CONSIDERATION.

NOTES:
1. INSTALLATION TO BE COMPLETED IN ACCORDANCE WITH MANUFACTURER'S SPECIFICATIONS.
2. DO NOT SCALE DRAWINGS.
3. ALL STEEL RAILING COMPONENTS TO BE HOT–DIPPED GALVANIZED.

1 TYPICAL PANEL COMPONENTS

NOT TO SCALE

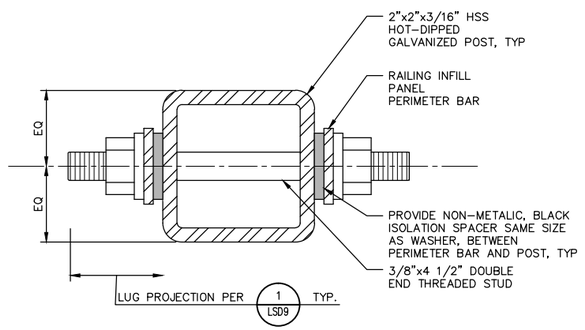

2 PANEL MOUNTING DETAIL

1" = 1"

STATE OF
WASHINGTON
LICENSED
LANDSCAPE ARCHITECT

MATTHEW C. GURRAD
LICENSE NO. 1094
EXPIRES ON _____

NO.	DATE	BY	APPR.	REVISIONS

Approved By

TRANSPORTATION DESIGN MANAGER S. COSTA DATE

PROJECT MANAGER DATE

M. GURRAD
DESIGNED BY DATE
J. FRYE
DRAWN BY DATE
G. LAI
CHECKED BY DATE

City of Bellevue
TRANSPORTATION DEPARTMENT

HDR

NE SPRING BLVD - ZONE 1B
90% DESIGN

URBAN DESIGN DETAILS
PEDESTRIAN RAILING

SHEET NAME LSD9

SHT 61 OF 184

90% SUBMITTAL NOT FOR CONSTRUCTION

RETAINING WALL ABBREVIATIONS:

A.P. – ANGLE POINT
CDF – CONTROLED DENSITY FILL
CIP – CAST–IN–PLACE
CLR./CLR – CLEAR
CONC. – CONCRETE
DIA./DIA – DIAMETER
E.J. – EXPANSION JOINT
ELEV. – ELEVATION
KSI = KIPS PER SQUARE INCH
LOL – LAYOUT LINE
LT – LEFT
N.T.S. – NOT TO SCALE
REINF. – REINFORCING
RT – RIGHT
SE WALL/ SEW – STRUCTURAL EARTH WALL
SPA./SPA – SPACE
STA./STA – STATION
TYP./TYP – TYPICAL
U.N.O. – UNLESS NOTED OTHERWISE
V.A.P. – VERTICAL ANGLE POINT

RETAINING WALL GENERAL NOTES:

1. STRUCTURES HAVE BEEN DESIGNED IN ACCORDANCE WITH THE REQUIREMENTS OF THE AASHTO LRFD BRIDGE DESIGN SPECIFICATIONS SEVENTH EDITION 2014 AND INTERIMS THROUGH 2015.
2. ALL MATERIALS AND WORKMANSHIP SHALL BE IN ACCORDANCE WITH THE REQUIREMENTS OF THE WSDOT STATE DEPARTMENT OF TRANSPORTATION STANDARD SPECIFICATIONS FOR ROAD, BRIDGE, AND MUNICIPAL CONSTRUCTION, DATED 2014, & AS MODIFIED OR SUPPLEMENTED BY THE SPECIAL PROVISIONS AND AMENDMENTS.
3. REINFORCING STEEL SHALL BE DEFORMED BARS AND SHALL CONFORM TO THE REQUIREMENTS OF AASHTO M 31 GRADE 60 OR ASTM A706 (Fy=60 KSI).
4. UNLESS OTHERWISE SHOWN IN THE PLANS, THE CONCRETE COVER MEASURED FROM THE FACE OF THE CONCRETE TO THE FACE OF ANY REINFORCING STEEL SHALL BE 2".
5. UNLESS OTHERWISE NOTED, ALL DIMENSIONS ARE IN FEET AND INCHES.
6. ALL DIMENSIONS ARE HORIZONTAL AND VERTICAL, UNLESS OTHERWISE SHOWN
7. ALL CONCRETE SHALL BE CONC. CLASS 4000 U.N.O.
8. THE GROUND LINE AT TOP OF WALL IS NOT MEANT TO BE STRAIGHT–LINED WHERE THE PROFILE INCLUDES A VERTICAL CURVE. THE CONTRACTOR SHALL DETERMINE THE FINISHED GROUND LINES BETWEEN THOSE GIVEN IN THE PLANS, FROM THE ROADWAY PROFILE AND SUPERELEVATION DIAGRAMS.
9. EXISTING GROUND LINE IS APPROXIMATE AND SHALL BE VERIFIED BY THE CONTRACTOR IN THE FIELD PRIOR TO CONSTRUCTION.
10. WALL QUANTITIES SHOWN ON THE PLANS ARE FOR THE CONVENIENCE OF THE CONTRACTOR IN DETERMINING THE VOLUME OF WORK INVOLVED FOR EACH RETAINING WALL. THE CONTRACTOR SHALL USE THE QUANTITIES SHOWN AT HIS OWN RISK.

STRUCTURAL EARTH WALL NOTES:

1. SE WALLS SHALL BE DESIGNED BY THE CONTRACTOR. WORKING DRAWINGS AND CALCULATIONS SHALL BE SUBMITTED REVIEW IN ACCORDANCE WITH THE SPECIFICATIONS.
2. THE CONTRACTOR SHALL BE RESPONSIBLE FOR ALL WORK INCIDENTAL TO THE CONSTRUCTION OF THE WALL WHICH INCLUDES AT MINIMUM, BUT NOT LIMITED TO, THE DESIGN, FURNISHING, AND INSTALLATION OF THE FOLLOWING ITEMS:
   - PRECAST CONCRETE PANEL LAYOUT TO THE LIMITS SHOWN ON THE PLANS
   - SOIL REINFORCING (LENGTH, MATERIAL, CONNECTIONS, # OF LIFTS, ETC)
   - SOIL REINFORCING AROUND OBSTRUCTIONS.
   - LAYOUT OF THE WALL UNDERDRAIN PIPES & CONNECTION TO THE SITE STORM DRAIN SYSTEM.
   - LEVELING PAD INSTALLATION, PER WALL MANUFACTURER'S RECOMMENDATIONS AND THE SPECIFICATIONS.
   - CONCRETE CAP BLOCK, CIP LEVELING STRIP, AND CIP COPING.
   - PEDESTRIAN RAILING, GUARDRAILS, CONCRETE BARRIERS, AND CONCRETE BARRIER WITH MOMENT SLABS. (SHAPE, STYLE, SIZE, & LOCATION SHALL CONFORM TO THE PLANS.)
3. STRUCTURAL EARTH WALLS SHALL HAVE PRECAST CONCRETE FACING PANELS UNLESS NOTED OTHERWISE ON THE PLANS.
4. PRECAST CONCRETE FACING PANELS SHALL BE 5 FEET SQUARE, EXCEPT FOR PARTIAL PANELS AT THE TOP, BOTTOM, AND ENDS OF THE WALL AS REQUIRED.
5. WALL UNDERDRAIN PIPE SHALL CONSIST OF A 6–INCH DIAMETER (MINIMUM) PERFORATED PVC PIPE.
6. CONNECT WALL UNDERDRAIN PIPE TO SITE STORM DRAIN SYSTEM. SEE DRAINAGE PLANS FOR DETAILS.
7. ELEVATIONS AT BOTTOM OF WALL MAY BE ADJUSTED TO FIT PRECAST CONCRETE PANELS, BUT SHALL BE NO HIGHER THAN SHOWN.

STRUCTURAL EARTH WALL NOTES CONTINUED:

8. PRECAST CONCRETE FACING PANELS SHALL HAVE A MIN. 28–DAY COMPRESSIVE STRENGTH OF 4000 PSI.
9. CONCRETE SURFACE FINISH FOR THE FRONT FACE OF PRCAST CONCRETE PANLS SHALL BE AS SHOWN ON THE PLANS AND A UNIFORM FINISH ON THE REAR FACE. THE REAR FACE OF THE PANELS SHALL BE ROUGHLY SCREEDED TO ELIMINATE OPEN POCKETS OF AGGREGATE AND SURFACE DISTORTIONS IN EXCESS OF ¼".
10. ALL FASTENERS, PLATES, BARS, REINFORCING STRIPS, REINFORCING MESH, TIE STRIPS AND CONNECTOR PINS SHALL BE GALVANIZED IN ACCORDANCE WITH AASHTO M111, AASTHO M 232 AND ASTM A–123.

SOLDIER PILE WALL STRUCTURE NOTES:

1. SOLDIER PILE SHAFTS SHALL BE FILLED WITH CONTROLLED DENSITY FILL (CDF) WHEN PLACED IN THE DRY. USE PUMPABLE LEAN CONCRETE WHEN PLACED IN THE WET.
2. SOLDIER PILES SHALL BE PAINTED TO THE LIMITS SHOWN IN THE PLANS WITH 1 COAT OF INORGANIC ZINC PRIMER IN ACCORDANCE WITH THE STANDARD SPECIFICATIONS.
3. W SECTION STEEL SOLDIER PILES SHALL CONFORM TO ASTM A992. HP STEEL SOLDIER PILE SECTIONS SHALL CONFORM TO ASTM A572 GRADE 50.
4. ALL WELDING SHALL BE DONE TO MINIMIZE DISTORTION. THE WELDING SEQUENCES AND PROCEDURES TO BE USED SHALL BE SUBMITTED TO THE ENGINEER FOR APPROVAL PRIOR TO THE START OF WELDING.
5. TIMBER LAGGING SHALL BE DESIGNED BY THE CONTRACTOR AND SUBMITTED TO THE ENGINEER FOR APPROVAL IN ACCORDANCE WITH STANDARD SPECIFICATION SECTION 6–16.3(6).
6. PREFABRICATED DRAINAGE MATS SHALL BE 4'–0" WIDE BY FULL LAGGED HEIGHT AND CENTERED BETWEEN SOLDIER PILE FLANGES. TAPE EDGES TO PREVENT CONCRETE INFILTRATION.

CONSTRUCTION NOTES FOR WP SHEETS:

1. EXISTING UNDERGROUND UTILITIES, STORM DRAIN, WATER LINE, SEWER LINE, POWER LINE, ETC. SEE RESPECTIVE DISCIPLINE SHEETS FOR DETAILS ON REMOVAL OR RELOCATION.
2. STORM DRAIN LINE, CATCH BASIN, PLANTER BOX, INLET STRUCTURE, OR DETENTION VAULT, SEE DRAINAGE SHEETS FOR DETAILS.
3. UNDERGROUND UTILITIES OR UTILITY VAULTS. SEE UTILITY SHEETS FOR DETAILS.
4. LIGHTING, ELECTRICAL OR SIGNAGE, SEE ILLUMINATION AND SIGNING SHEETS.
5. WATER LINE, SEE WATER MAIN SHEETS FOR DETAILS.
6. SEW PEDESTRIAN BARRIER WITH MOMENT SLAB.
7. APPROXIMATE LIMITS OF WALL REINF.
8. APPROXIMATE LOCATION OF WALL UNDERDRAIN.
9. APPROXIMATE LOCATION OF REINFORCED SOIL FILL.

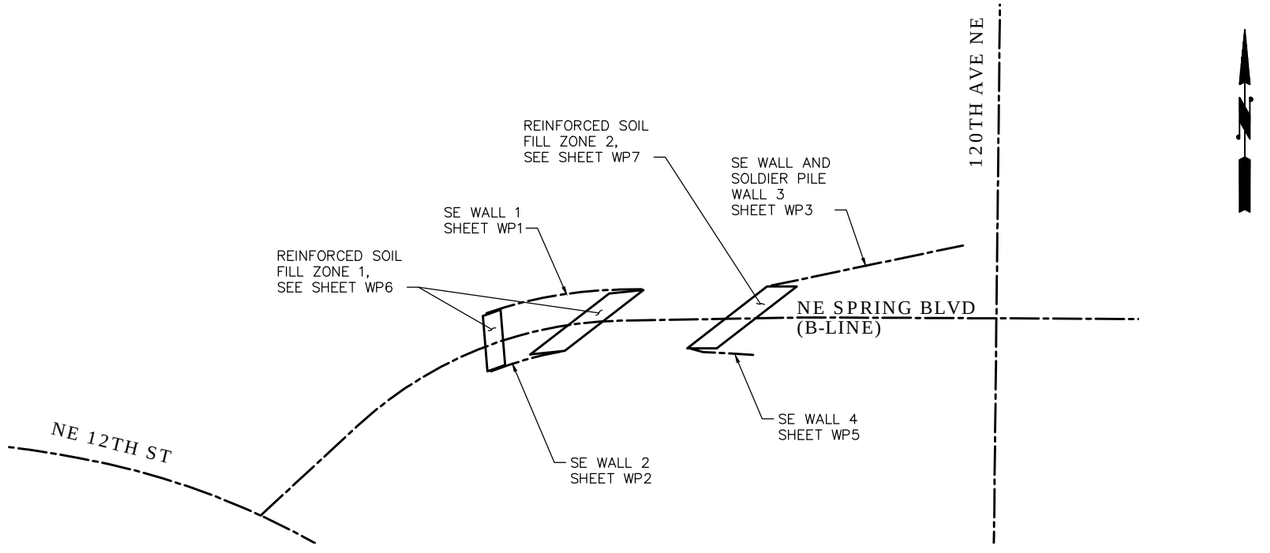

RETAINING WALL KEY PLAN ZONE 1B
N.T.S.

NO.	DATE	BY	APPR.	REVISIONS

Approved By

TRANSPORTATION DESIGN MANAGER DATE
S. COSTA
PROJECT MANAGER DATE

J. VO — DESIGNED BY DATE
L. KELLER — DRAWN BY DATE
J. LEM — CHECKED BY DATE

City of Bellevue
TRANSPORTATION DEPARTMENT

HDR

NE SPRING BLVD - ZONE 1B
90% DESIGN

RETAINING WALL NOTES & KEY PLAN

SHEET NAME WPN1

SHT 62 OF 185

SECTION 28, T. 25 N., R5E., W.M.
KING COUNTY

90% SUBMITTAL NOT FOR CONSTRUCTION

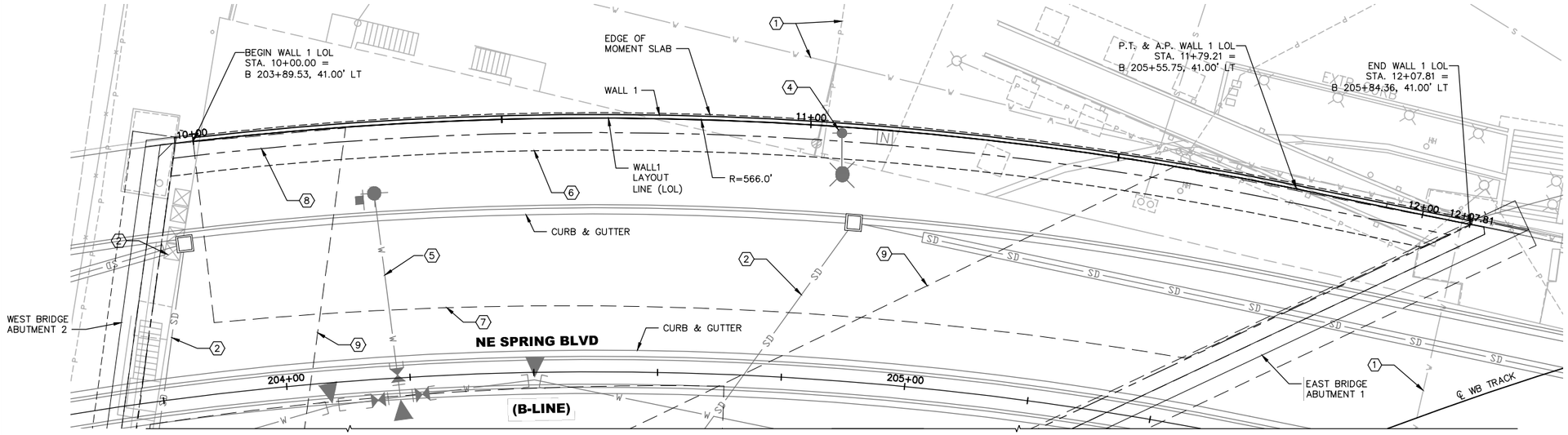

WALL 1 PLAN – STRUCTURAL EARTH WALL

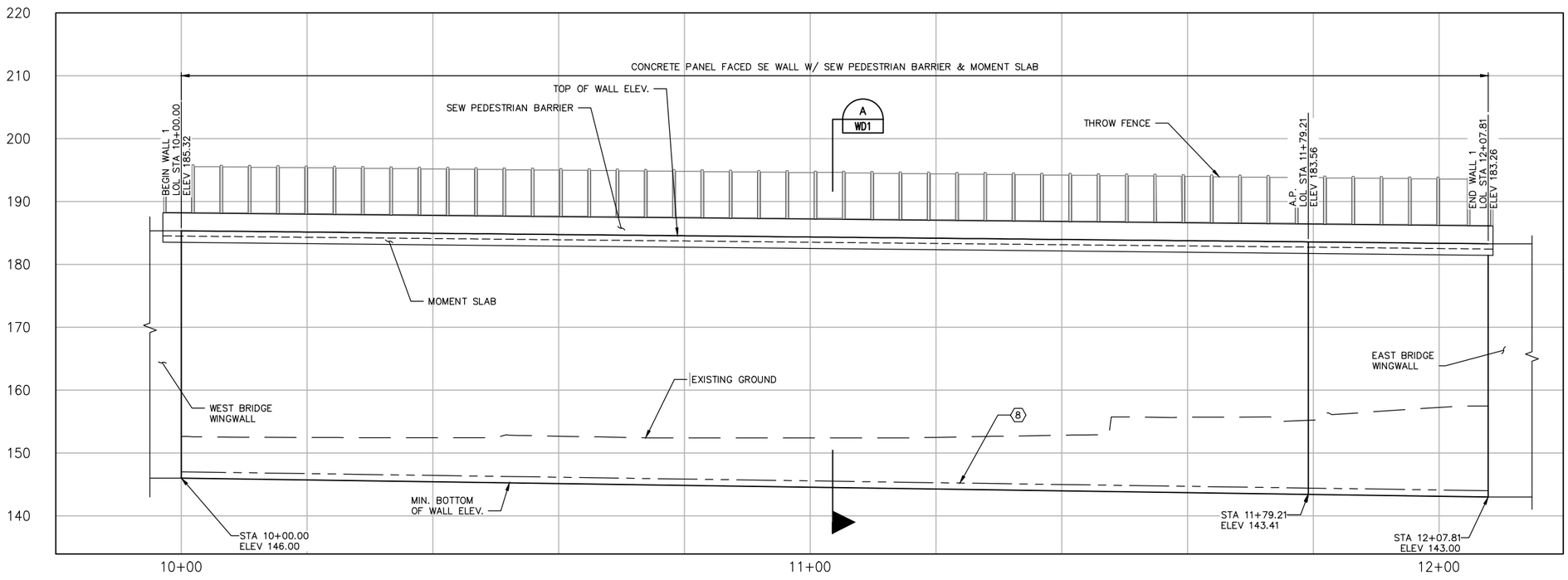

WALL 1 REFLECTED DEVELOPED ELEVATION – STRUCTURAL EARTH WALL

NOTES

1. LIMITS OF WALL REINF. SHOWN IS FOR REFERENCE ONLY. THE WALL REINF. LAYOUT SHALL BE DESIGNED BY THE CONTRACTOR. WALL LIMITS SHOWN IS APPROXIMATE AT 0.75*H OR 6FT, WHICH EVER IS GREATER, WHERE H=WALL DESIGN HEIGHT.
2. CONTRACTOR SHALL VERIFY ALL EXISTING UTILITIES, WATERLINES, STORM DRAINS, SEWER LINES, ETC. PRIOR TO CONSTRUCTION.
3. THE QUANTITIES ARE LISTED BELOW ONLY FOR THE CONVENIENCE OF THE CONTRACTOR IN DETERMINING THE VOLUME OF WORK INVOLVED FOR THIS RETAINING WALL. DEDUCTIONS OF QUANTITIES FOR OVERLAPPING WALL LIMITS HAVE NOT BEEN ACCOUNTED FOR. THE CONTRACTOR SHALL USE THE QUANTITIES AT HIS OWN RICK.
4. THE DESIGN AND LAYOUT OF THE SE WALL PANEL REINFORCEMENT SHALL BE COORDINATED WITH THE REINFORCED SOIL FILL.
5. SEE ALIGNMENT PLAN AND PROFILE SHEETS FOR NE SPRING BLVD ALIGNMENT AND CURVE DATA.

WALL 1 – APPROXIMATE QUANTITIES	
STRUCTURAL EARTH WALL (S.F.)	8280
WALL UNDERDRAIN (L.F.)	208
STRUCTURAL EXCAVATION CL. A INCL. HAUL (C.Y.)	1913
GRAVEL BORROW FOR STRUCTURAL EARTH WALL INCL. HAUL (C.Y.)	8214
SEW PEDESTRAIN BARRIER (L.F.)	208

* EARTH WORK QUANTITIES DO NOT SUBTRACT OUT OVERLAP WITH THE REINF. SOIL FILL.

CONSTRUCTION NOTES:

1. EXISTING UNDERGROUND UTILITIES, STORM DRAIN, WATER LINE, SEWER LINE, POWER LINE, ETC. SEE RESPECTIVE DISCIPLINE SHEETS FOR DETAILS ON REMOVAL OR RELOCATION.
2. STORM DRAIN LINE, CATCH BASIN, PLANTER BOX, INLET STRUCTURE, OR DETENTION VAULT, SEE DRAINAGE SHEETS FOR DETAILS.
4. LIGHTING, ELECTRICAL OR SIGNAGE, SEE ILLUMINATION AND SIGNING SHEETS.
5. WATER LINE, SEE WATER MAIN SHEETS FOR DETAILS.
6. SEW PEDESTRIAN BARRIER WITH MOMENT SLAB.
7. APPROXIMATE LIMITS OF WALL REINF.
8. APPROXIMATE LOCATION OF WALL UNDERDRAIN.
9. APPROXIMATE LOCATION OF REINFORCED SOIL FILL.

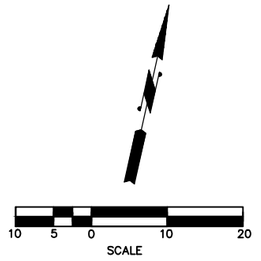

ROBERT D. RICHMOND
STATE OF WASHINGTON
33999
REGISTERED
PROFESSIONAL ENGINEER

NO.	DATE	BY	APPR.	REVISIONS

Approved By

TRANSPORTATION DESIGN MANAGER — DATE
S. COSTA
PROJECT MANAGER — DATE

J. VO — DESIGNED BY — DATE
L. KELLER — DRAWN BY — DATE
J. LEM — CHECKED BY — DATE

City of Bellevue
TRANSPORTATION DEPARTMENT

HDR

NE SPRING BLVD - ZONE 1B
90% DESIGN

STRUCTURAL EARTH WALL 1
PANEL FACED - PLAN & ELEVATION

SHEET NAME **WP1**

SHT 63 OF 184

SECTION 28, T. 25 N., R5E., W.M.
KING COUNTY

90% SUBMITTAL NOT FOR CONSTRUCTION

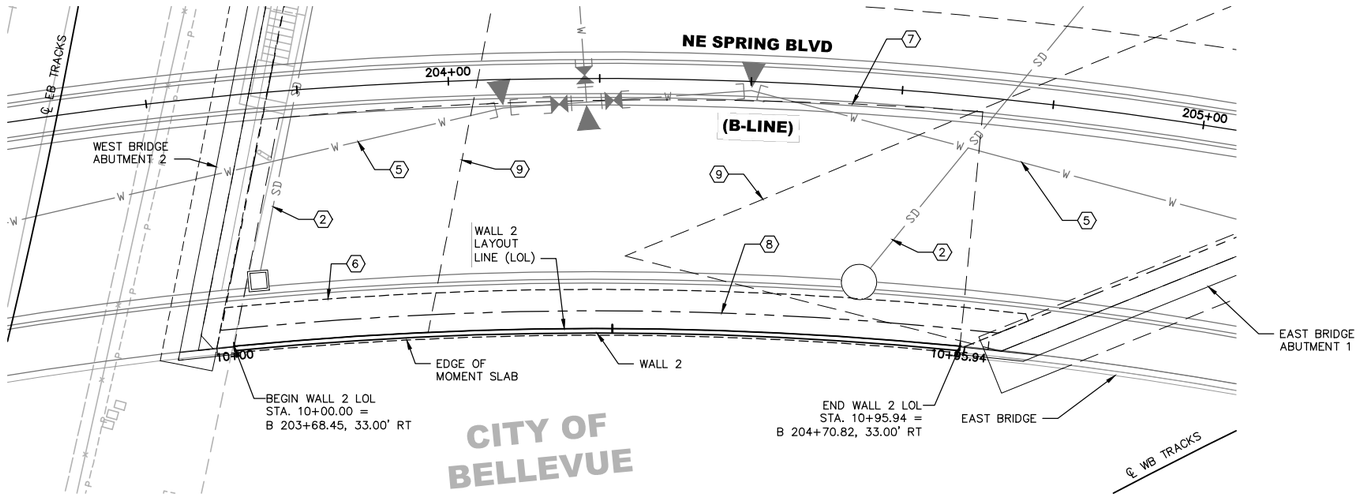

WALL 2 PLAN – STRUCTURAL EARTH WALL

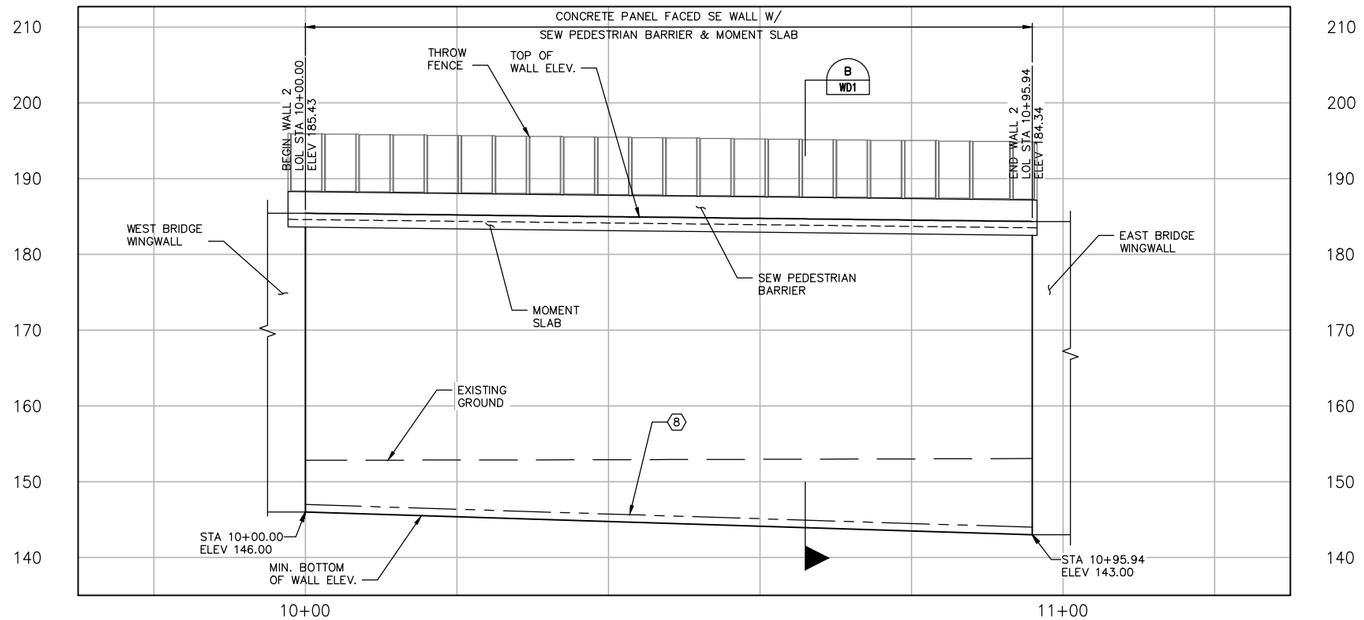

WALL 2 DEVELOPED ELEVATION – STRUCTURAL EARTH WALL

NOTES

1. UNLESS NOTED OTHERWISE ALL DIMENSIONS ARE IN FEET AND INCHES.
2. LIMITS OF WALL REINF. SHOWN IS FOR REFERENCE ONLY. THE WALL REINF. LAYOUT SHALL BE DESIGNED BY THE CONTRACTOR. WALL LIMITS SHOWN IS APPROXIMATE AT 0.75*H OR 6FT, WHICH EVER IS GREATER, WHERE H=WALL DESIGN HEIGHT.
3. CONTRACTOR SHALL VERIFY ALL EXISTING UTILTIES, WATERLINES, STORM DRAINS, SEWER LINES, ETC. PRIOR TO CONSTRUCTION.
4. THE QUANTITIES ARE LISTED BELOW ONLY FOR THE CONVENIENCE OF THE CONTRACTOR IN DETERMINING THE VOLUME OF WORK INVOLVED FOR THIS RETAINING WALL. DEDUCTIONS OF QUANTITIES FOR OVERLAPPING WALL LIMITS HAVE NOT BEEN ACCOUNTED FOR. THE CONTRACTOR SHALL USE THE QUANTITIES AT HIS OWN RISK.
5. THE DESIGN AND LAYOUT OF THE SE WALL PANEL REINFORCEMENT SHALL BE COORDINATED WITH THE REINFORCED SOIL FILL.
6. SEE ALIGNMENT PLAN AND PROFILE SHEETS FOR NE SPRING BLVD ALIGNMENT AND CURVE DATA.

WALL 2 – APPROXIMATE QUANTITIES	
STRUCTURAL EARTH WALL (S.F.)	3880
WALL UNDERDRAIN (L.F.)	96
STRUCTURAL EXCAVATION CL. A INCL. HAUL (C.Y.)	866
GRAVEL BORROW FOR STRUCTURAL EARTH WALL INCL. HAUL (C.Y.)	4051
SEW PEDESTRAIN BARRIER (L.F.)	96

* EARTH WORK QUANTITIES DO NOT SUBTRACT OUT OVERLAP WITH THE REINF. SOIL FILL.

CONSTRUCTION NOTES:

(2) STORM DRAIN LINE, CATCH BASIN, PLANTER BOX, INLET STRUCTURE, OR DETENTION VAULT, SEE DRAINAGE SHEETS FOR DETAILS.

(5) WATER LINE, SEE WATER MAIN SHEETS FOR DETAILS.

(6) SEW PEDESTRIAN BARRIER WITH MOMENT SLAB.

(7) APPROXIMATE LIMITS OF WALL REINF.

(8) APPROXIMATE LOCATION OF WALL UNDERDRAIN.

(9) APPROXIMATE LOCATION OF REINFORCED SOIL FILL.

10 5 0 10 20
SCALE

NO.	DATE	BY	APPR.	REVISIONS

Approved By

TRANSPORTATION DESIGN MANAGER DATE
S. COSTA
PROJECT MANAGER DATE

J. VO — DESIGNED BY DATE
L. KELLER — DRAWN BY DATE
J. LEM — CHECKED BY DATE

City of Bellevue
TRANSPORTATION DEPARTMENT

HDR

NE SPRING BLVD - ZONE 1B
90% DESIGN

STRUCTURAL EARTH WALL 2
PANEL FACED - PLAN & ELEVATION

SHEET NAME **WP2**

SHT 64 OF 184

SECTION 28, T. 25 N., R5E., W.M.
KING COUNTY

90% SUBMITTAL NOT FOR CONSTRUCTION

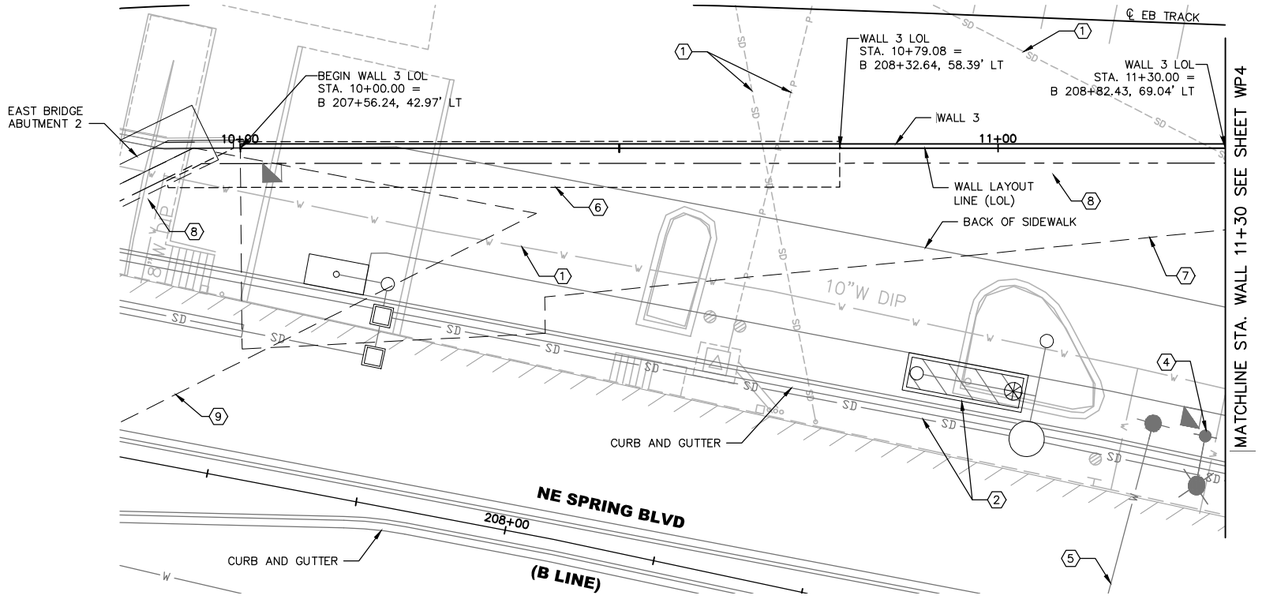

WALL 3 PLAN – STRUCTURAL EARTH WALL & SOLDIER PILE WALL

NOTES

1. UNLESS NOTED OTHERWISE ALL DIMENSIONS ARE IN FEET AND INCHES.
2. LIMITS OF WALL REINF. SHOWN IS FOR REFERENCE ONLY. THE WALL REINF. LAYOUT SHALL BE DESIGNED BY THE CONTRACTOR. WALL LIMITS SHOWN IS APPROXIMATE AT 0.75*H OR 6FT, WHICH EVER IS GREATER, WHERE H=WALL DESIGN HEIGHT.
3. CONTRACTOR SHALL VERIFY ALL EXISTING UTILITIES, WATERLINES, STORM DRAINS, SEWER LINES, ETC. PRIOR TO CONSTRUCTION.
4. THE QUANTITIES ARE LISTED BELOW ONLY FOR THE CONVENIENCE OF THE CONTRACTOR IN DETERMINING THE VOLUME OF WORK INVOLVED FOR THIS RETAINING WALL. DEDUCTIONS OF QUANTITIES FOR OVERLAPPING WALL LIMITS HAVE NOT BEEN ACCOUNTED FOR. THE CONTRACTOR SHALL USE THE QUANTITIES AT HIS OWN RISK.
5. THE DESIGN AND LAYOUT OF THE SE WALL PANEL REINFORCEMENT SHALL BE COORDINATED WITH THE REINFORCED SOIL FILL.
6. SEE ALIGNMENT PLAN AND PROFILE SHEETS FOR NE SPRING BLVD ALIGNMENT AND CURVE DATA.

SE WALL 3 – APPROXIMATE QUANTITIES	
STRUCTURAL EARTH WALL (S.F.)	4130
SOLDIER PILE WALL (S.F.)	1009
WALL UNDERDRAIN (L.F.)	258
STRUCTURAL EXCAVATION CL. A INCL. HAUL (C.Y.)	695
GRAVEL BORROW FOR STRUCTURAL EARTH WALL INCL. HAUL (C.Y.)	2699
SEW PEDESTRAIN BARRIER (L.F.)	80
PEDESTRAIN RAILING (L.F.)	178

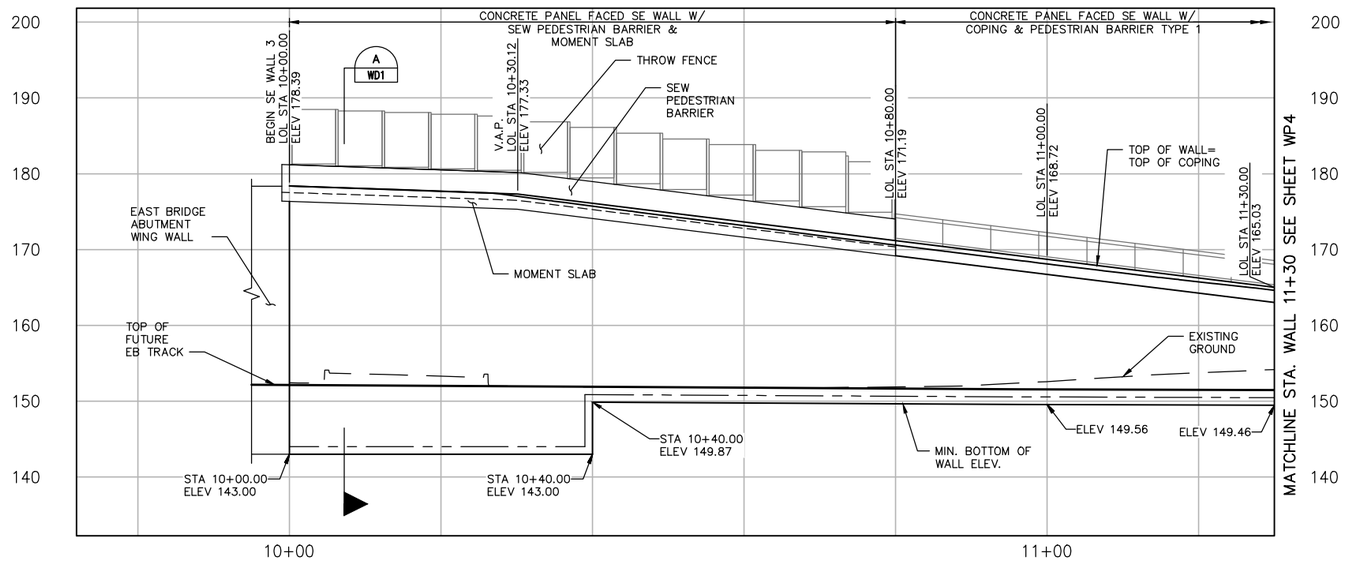

WALL 3 REFLECTED DEVELOPED ELEVATION – STRUCTURAL EARTH WALL & SOLDIER PILE WALL

CONSTRUCTION NOTES:

1. EXISTING UNDERGROUND UTILITIES, STORM DRAIN, WATER LINE, SEWER LINE, POWER LINE, ETC. SEE RESPECTIVE DISCIPLINE SHEETS FOR DETAILS ON REMOVAL OR RELOCATION.
2. STORM DRAIN LINE, CATCH BASIN, PLANTER BOX, INLET STRUCTURE, OR DETENTION VAULT, SEE DRAINAGE SHEETS FOR DETAILS.
4. LIGHTING, ELECTRICAL OR SIGNAGE, SEE ILLUMINATION AND SIGNING SHEETS.
5. WATER LINE, SEE WATER MAIN SHEETS FOR DETAILS.
6. SEW PEDESTRIAN BARRIER WITH MOMENT SLAB.
7. APPROXIMATE LIMITS OF WALL REINF.
8. APPROXIMATE LOCATION OF WALL UNDERDRAIN.
9. APPROXIMATE LOCATION OF REINFORCED SOIL FILL.

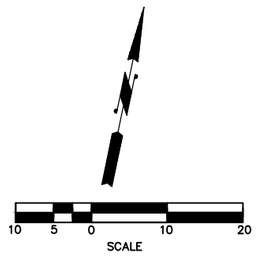

NO.	DATE	BY	APPR.	REVISIONS

Approved By

TRANSPORTATION DESIGN MANAGER — DATE
S. COSTA
PROJECT MANAGER — DATE

J. VO — DESIGNED BY — DATE
L. KELLER — DRAWN BY — DATE
J. LEM — CHECKED BY — DATE

City of Bellevue
TRANSPORTATION DEPARTMENT

HDR

NE SPRING BLVD - ZONE 1B
90% DESIGN

STRUCTURAL EARTH WALL - PANEL FACED & SOLDIER PILE WALL 3 - PLAN & ELEVATION

SHEET NAME **WP3**

SHT 65 OF 184

SECTION 28, T. 25 N., R5E., W.M.
KING COUNTY

90% SUBMITTAL NOT FOR CONSTRUCTION

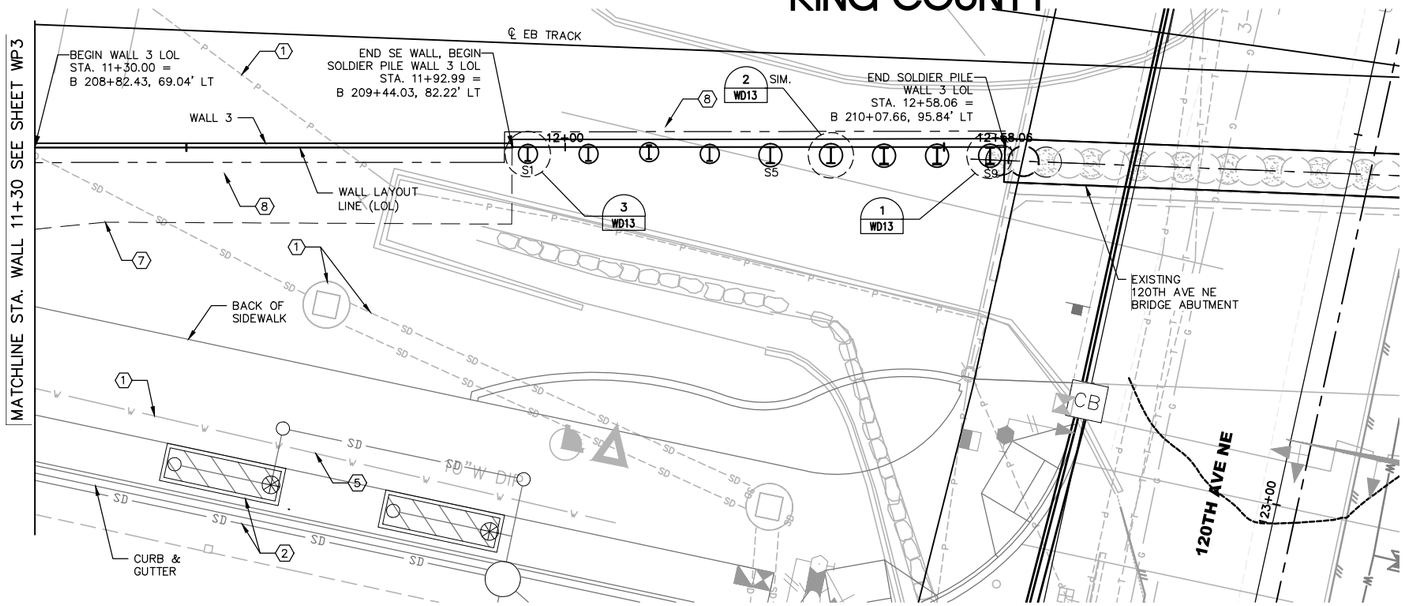

WALL 3 PLAN – STRUCTURAL EARTH WALL & SOLDIER PILE WALL

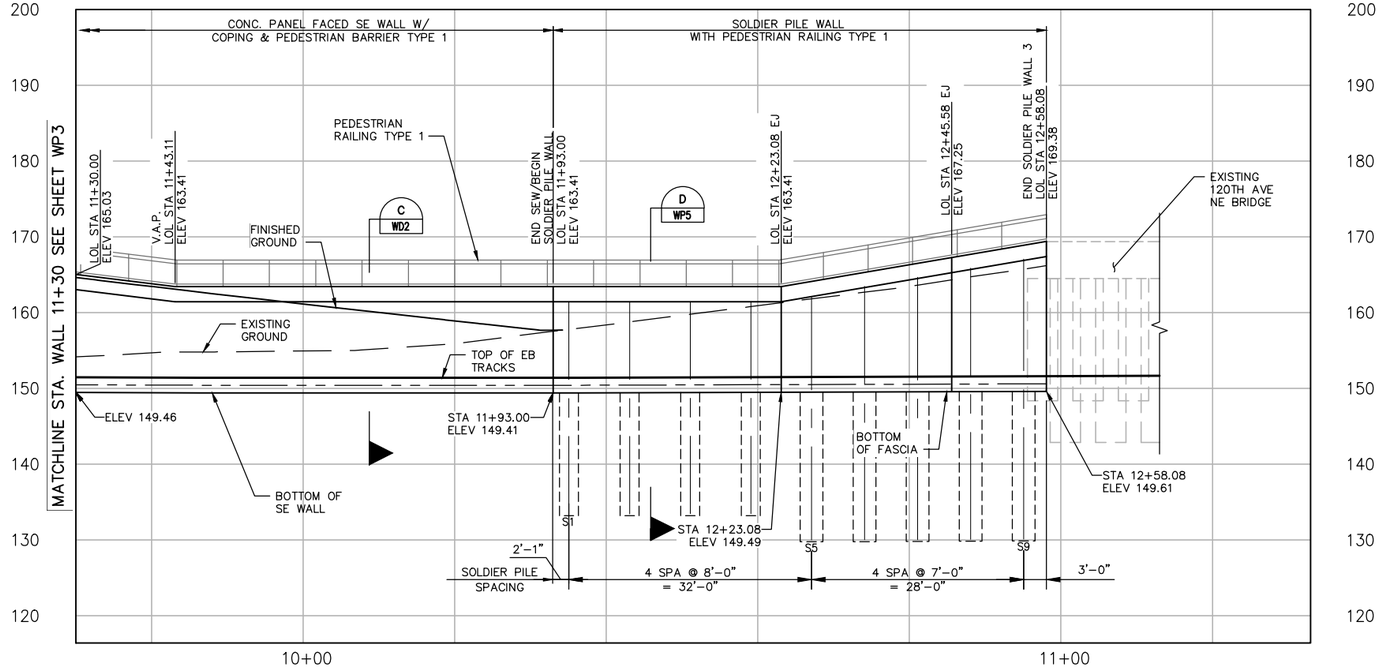

WALL 3 REFLECTED DEVELOPED ELEVATION – STRUCTURAL EARTH WALL & SOLDIER PILE WALL

NOTES

1. LIMITS OF WALL REINF. SHOWN IS FOR REFERENCE ONLY. THE WALL REINF. LAYOUT SHALL BE DESIGNED BY THE CONTRACTOR. WALL LIMITS SHOWN IS APPROXIMATE AT 0.75*H OR 6FT, WHICH EVER IS GREATER, WHERE H=WALL DESIGN HEIGHT.
2. CONTRACTOR SHALL VERIFY ALL EXISTING UTILITIES, WATERLINES, STORM DRAINS, SEWER LINES, ETC. PRIOR TO CONSTRUCTION.
3. THE QUANTITIES ARE LISTED BELOW ONLY FOR THE CONVENIENCE OF THE CONTRACTOR IN DETERMINING THE VOLUME OF WORK INVOLVED FOR THIS RETAINING WALL. DEDUCTIONS OF QUANTITIES FOR OVERLAPPING WALL LIMITS HAVE NOT BEEN ACCOUNTED FOR. THE CONTRACTOR SHALL USE THE QUANTITIES AT HIS OWN RISK.
4. THE DESIGN AND LAYOUT OF THE SE WALL PANEL REINFORCEMENT SHALL BE COORDINATED WITH THE REINFORCED SOIL FILL.
5. SEE ALIGNMENT PLAN AND PROFILE SHEETS FOR NE SPRING BLVD ALIGNMENT AND CURVE DATA.

SE WALL 3 – APPROXIMATE QUANTITIES	
STRUCTURAL EARTH WALL (S.F.)	4130
SOLDIER PILE WALL (S.F.)	1009
WALL UNDERDRAIN (L.F.)	258
STRUCTURAL EXCAVATION CL. A INCL. HAUL (C.Y.)	695
GRAVEL BORROW FOR STRUCTURAL EARTH WALL INCL. HAUL (C.Y.)	2699
SEW PEDESTRAIN BARRIER (L.F.)	80
PEDESTRAIN RAILING (L.F.)	178

CONSTRUCTION NOTES:

(1) EXISTING UNDERGROUND UTILITIES, STORM DRAIN, WATER LINE, SEWER LINE, POWER LINE, ETC. SEE RESPECTIVE DISCIPLINE SHEETS FOR DETAILS ON REMOVAL OR RELOCATION.

(2) STORM DRAIN LINE, CATCH BASIN, PLANTER BOX, INLET STRUCTURE, OR DETENTION VAULT, SEE DRAINAGE SHEETS FOR DETAILS.

(4) LIGHTING, ELECTRICAL OR SIGNAGE, SEE ILLUMINATION AND SIGNING SHEETS.

(5) WATERLINE, SEE WATER MAIN SHEETS FOR DETAILS.

(7) APPROXIMATE LIMITS OF WALL REINF.

(8) APPROXIMATE LOCATION OF WALL UNDERDRAIN.

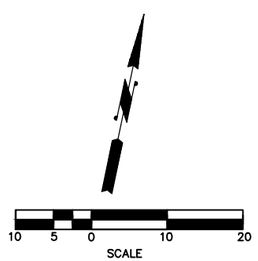

ROBERT D. RAMSDEN
STATE OF WASHINGTON
33999
REGISTERED
PROFESSIONAL ENGINEER

NO.	DATE	BY	APPR.	REVISIONS

Approved By

TRANSPORTATION DESIGN MANAGER DATE
S. COSTA
PROJECT MANAGER DATE

J. VO DESIGNED BY DATE
L. KELLER DRAWN BY DATE
J. LEM CHECKED BY DATE

City of Bellevue
TRANSPORTATION DEPARTMENT

HDR

NE SPRING BLVD - ZONE 1B
90% DESIGN

STRUCTURAL EARTH WALL - PANEL FACED & SOLDIER PILE WALL 3 - PLAN & ELEVATION

SHEET NAME **WP4**

SHT 66 OF 184

SECTION 28, T. 25 N., R5E., W.M.
KING COUNTY

90% SUBMITTAL NOT FOR CONSTRUCTION

NOTES:

1. SEE SHEET WPN1 FOR RETAINING WALL NOTES.
2. SEE LANDSCAPE AND URBAN DESIGN DETAIL SHEETS FOR PEDESTRIAN RAILING TYPE 1 DETAILS.
3. SEE WD SHEETS FOR ADDITIONAL INFORMATION AND SOLDIER PILE WALL DETAILS.
4. SOLDIER PILE RETAINING WALL SHALL BE MEASURED AND PAID BY THE SQUARE FEET OF COMPLETED WALL FASCIA. SEE SPECIAL PROVISIONS FOR DETAILS.
5. THE MATERIAL QUANTITIES SHOWN ON THE PLANS ARE FOR THE CONVENIENCE OF THE CONTRACTOR IN DETERMINING THE VOLUME OF WORK INVOLVED FOR THIS WALL. THE QUANTITIES SHOWN ARE AN ESTIMATION ONLY AND SHALL BE USED BY THE CONTRACTOR AT HIS OWN RISK.
6. FOR ADDITIONAL SOLDIER PILE DETAILS NOT SHOWN SEE SHEETS WD11 THRU WD13.

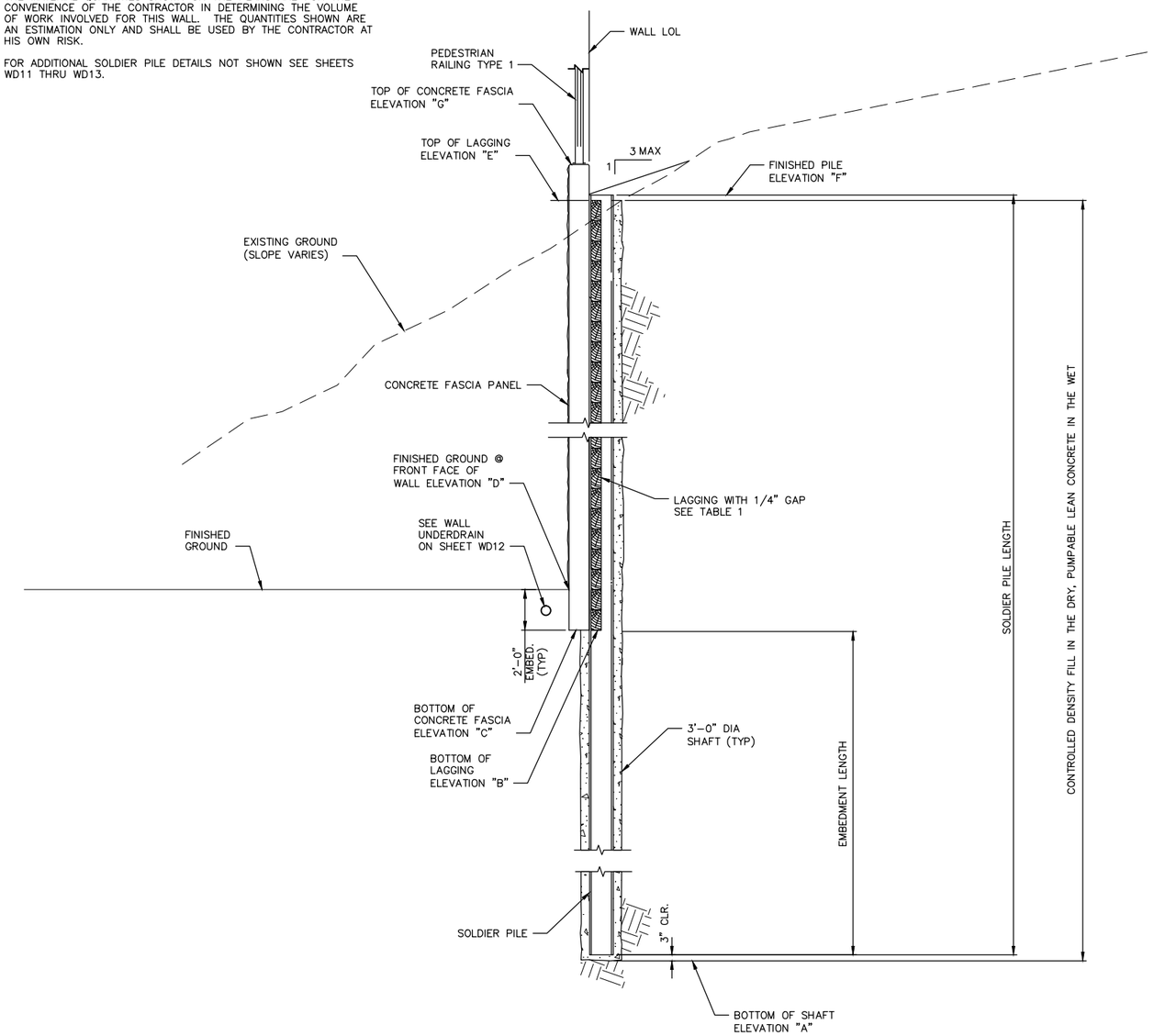

SOLDIER PILE WALL TYPICAL CROSS SECTION (D / WP4)
NOT TO SCALE

WALL 3 – SOLDIER PILE WALL SCHEDULE											
SOLDIER PILE NO.	WALL STATION	SOLDIER PILE SECTION	BOTTOM OF SHAFT ELEVATION "A" (FT)	BOTTOM OF LAGGING ELEVATION "B" (FT)	BOTTOM OF CONCRETE FASCIA ELEVATION "C" (FT)	FINISHED GROUND AT FACE OF WALL ELEVATION "D" (FT)	TOP OF LAGGING ELEVATION "E" (FT)	FINISHED PILE ELEVATION "F" (FT)	TOP OF CONCRETE FASCIA ELEVATION "G" (FT)	PILE LENGTH (FT)	SHAFT DIAMETER (FT)
S1	11+95.08	W18x97	133.2	149.4	149.4	151.4	158.8	161.4	163.4	28.0	3.0
S2	12+03.08	W18x97	133.2	149.4	149.4	151.4	159.8	161.4	163.4	28.0	3.0
S3	12+11.08	W18x97	133.2	149.4	149.5	151.5	160.8	161.4	163.4	28.0	3.0
S4	12+19.08	W18x97	133.2	149.5	149.5	151.5	161.8	161.4	163.4	27.9	3.0
S5	12+27.08	W24x229	129.8	149.5	149.5	151.5	162.7	162.1	164.1	32.1	3.0
S6	12+34.08	W24x229	129.8	149.5	149.5	151.5	163.6	163.3	165.3	33.3	3.0
S7	12+41.08	W24x229	129.8	149.5	149.6	151.6	164.7	164.5	166.5	34.4	3.0
S8	12+48.08	W24x229	129.8	149.6	149.6	151.6	165.8	165.7	167.7	35.6	3.0
S9	12+55.08	W24x229	129.8	149.6	149.6	151.6	165.8	166.9	168.9	36.8	3.0

TABLE 1 – RECOMMENDED MIN (ROUGH–CUT) LAGGING THICKNESS		
LAGGING HEIGHT (ft)	CLEAR SPAN	
	5–8 ft	8–10 ft
0–25	3"	4"

LAGGING ELEMENTS SHALL BE DESIGNED BY THE CONTRACTOR AND MEET THE MINIMUM REQUIREMENTS ABOVE. SEE STANDARD SPECIFICATIONS FOR DETAILS.

SOLDIER PILE WALL 3 APPROXIMATE QUANTITIES	
SHAFT – 3.0 FT DIAMETER (FT)	275
FURNISHING SOLDIER PILE – W18x97 (FT)	112
FURNISHING SOLDIER PILE – W24x229 (FT)	173
LAGGING (SF)	831
PREFABRICATED DRAINAGE MAT (SY)	49
CONCRETE FASCIA PANEL (SF)	1010

QUANTITIES SHOWN ARE APPROXIMATE. SEE NOTES.

ROBERT D. RICHARDSON — STATE OF WASHINGTON — 13999 — REGISTERED PROFESSIONAL ENGINEER

NO.	DATE	BY	APPR.	REVISIONS

Approved By

TRANSPORTATION DESIGN MANAGER — DATE
S. COSTA
PROJECT MANAGER — DATE

J. VO — DESIGNED BY — DATE
L. KELLER — DRAWN BY — DATE
J. LEM — CHECKED BY — DATE

City of Bellevue
TRANSPORTATION DEPARTMENT

HDR

NE SPRING BLVD - ZONE 1B
90% DESIGN

SOLDIER PILE RETAINING WALL 3
TYPICAL SECTION & SCHEDULE

SHEET NAME: **WP5**

SHT 67 OF 184

SECTION 28, T. 25 N., R5E., W.M.
KING COUNTY

90% SUBMITTAL NOT FOR CONSTRUCTION

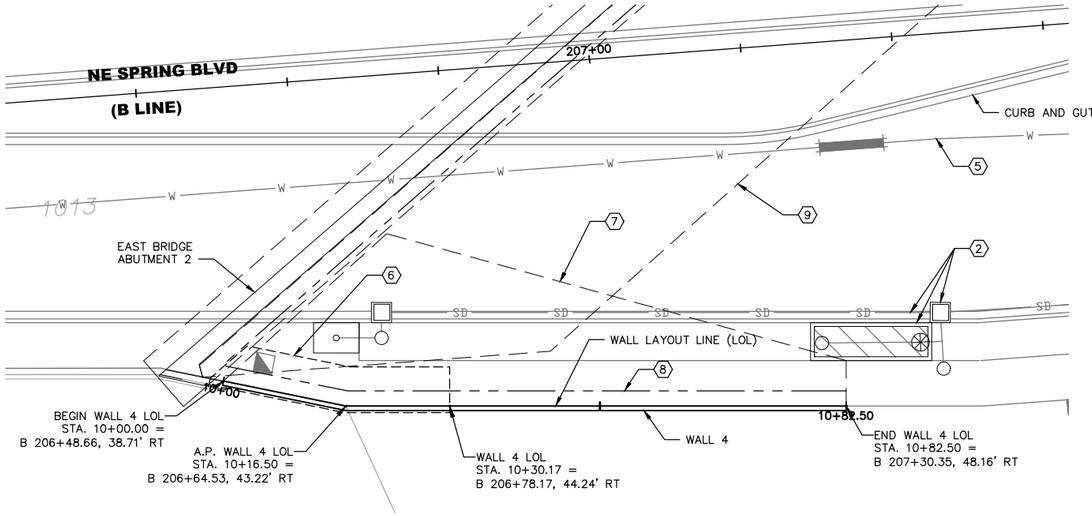

WALL 4 PLAN – STRUCTURAL EARTH WALL

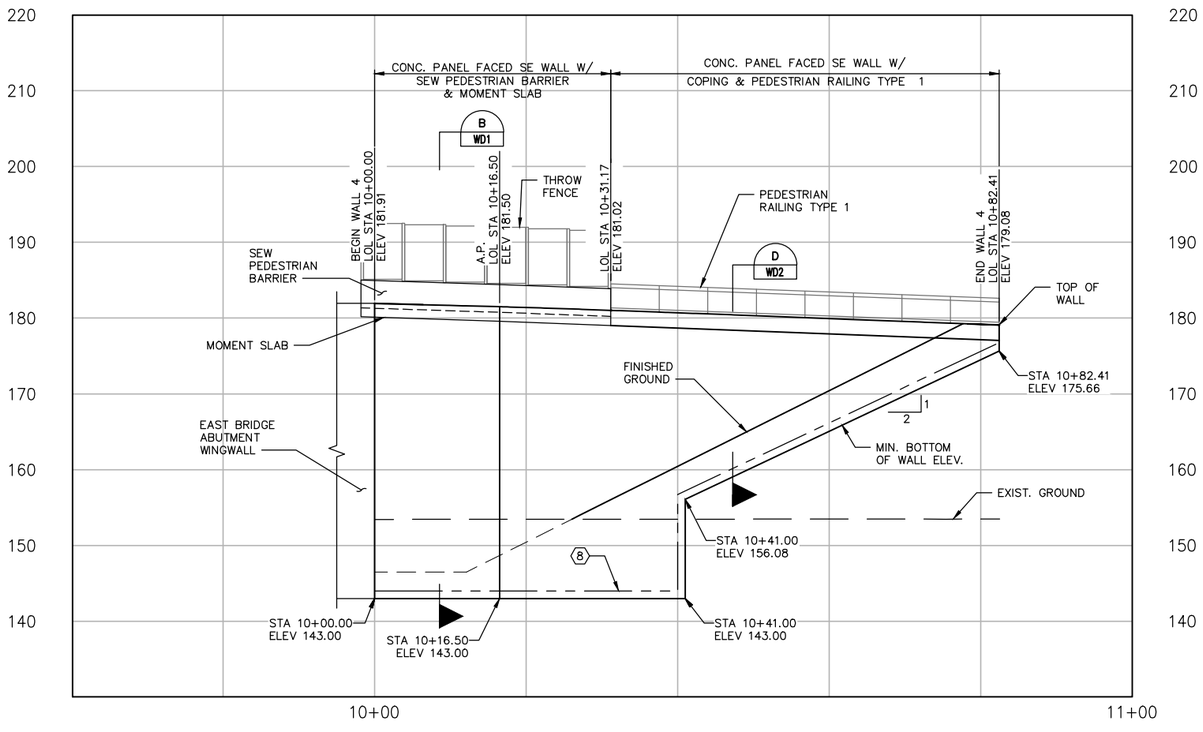

WALL 4 DEVELOPED ELEVATION – STRUCTURAL EARTH WALL

NOTES

1. UNLESS NOTED OTHERWISE ALL DIMENSIONS ARE IN FEET AND INCHES.
2. LIMITS OF WALL REINF. SHOWN IS FOR REFERENCE ONLY. THE WALL REINF. LAYOUT SHALL BE DESIGNED BY THE CONTRACTOR. WALL LIMITS SHOWN IS APPROXIMATE AT 0.75*H OR 6FT, WHICH EVER IS GREATER, WHERE H=WALL DESIGN HEIGHT.
3. CONTRACTOR SHALL VERIFY ALL EXISTING UTILTIES, WATERLINES, STORM DRAINS, SEWER LINES, ETC. PRIOR TO CONSTRUCTION.
4. THE QUANTITIES ARE LISTED BELOW ONLY FOR THE CONVENIENCE OF THE CONTRACTOR IN DETERMINING THE VOLUME OF WORK INVOLVED FOR THIS RETAINING WALL. DEDUCTIONS OF QUANTITIES FOR OVERLAPPING WALL LIMITS HAVE NOT BEEN ACCOUNTED FOR. THE CONTRACTOR SHALL USE THE QUANTITIES AT HIS OWN RISK.
5. THE DESIGN AND LAYOUT OF THE SE WALL PANEL REINFORCEMENT SHALL BE COORDINATED WITH THE REINFORCED SOIL FILL.
6. SEE ALIGNMENT PLAN AND PROFILE SHEETS FOR NE SPRING BLVD ALIGNMENT AND CURVE DATA.

WALL 4 – APPROXIMATE QUANTITIES	
STRUCTURAL EARTH WALL (S.F.)	2100
WALL UNDERDRAIN (L.F.)	99
STRUCTURAL EXCAVATION CL. A INCL. HAUL (C.Y.)	244
GRAVEL BORROW FOR STRUCTURAL EARTH WALL INCL. HAUL (C.Y.)	1238
SEW CONC. PEDESTRAIN BARRIER (L.F.)	30
PEDESTRIAN RAILING (L.F.)	53

CONSTRUCTION NOTES:

(2) STORM DRAIN LINE, CATCH BASIN, PLANTER BOX, INLET STRUCTURE, OR DETENTION VAULT, SEE DRAINAGE SHEETS FOR DETAILS.

(5) WATER LINE, SEE WATER MAIN SHEETS FOR DETAILS.

(6) SEW PEDESTRIAN BARRIER WITH MOMENT SLAB.

(7) APPROXIMATE LIMITS OF WALL REINF.

(8) APPROXIMATE LOCATION OF WALL UNDERDRAIN.

(9) APPROXIMATE LOCATION OF REINFORCED SOIL FILL.

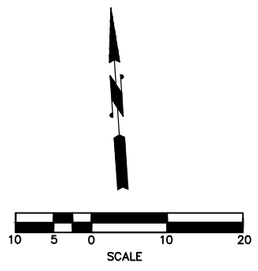

NO.	DATE	BY	APPR.	REVISIONS

Approved By

TRANSPORTATION DESIGN MANAGER — DATE
S. COSTA
PROJECT MANAGER — DATE

J. VO — DESIGNED BY — DATE
L. KELLER — DRAWN BY — DATE
J. LEM — CHECKED BY — DATE

City of Bellevue
TRANSPORTATION DEPARTMENT

HDR

NE SPRING BLVD - ZONE 1B
90% DESIGN

STRUCTURAL EARTH WALL 4
PANEL FACED - PLAN & ELEVATION

SHEET NAME **WP6**

SHT 68 OF 184

SECTION 28, T. 25 N., R5E., W.M.
KING COUNTY

90% SUBMITTAL NOT FOR CONSTRUCTION

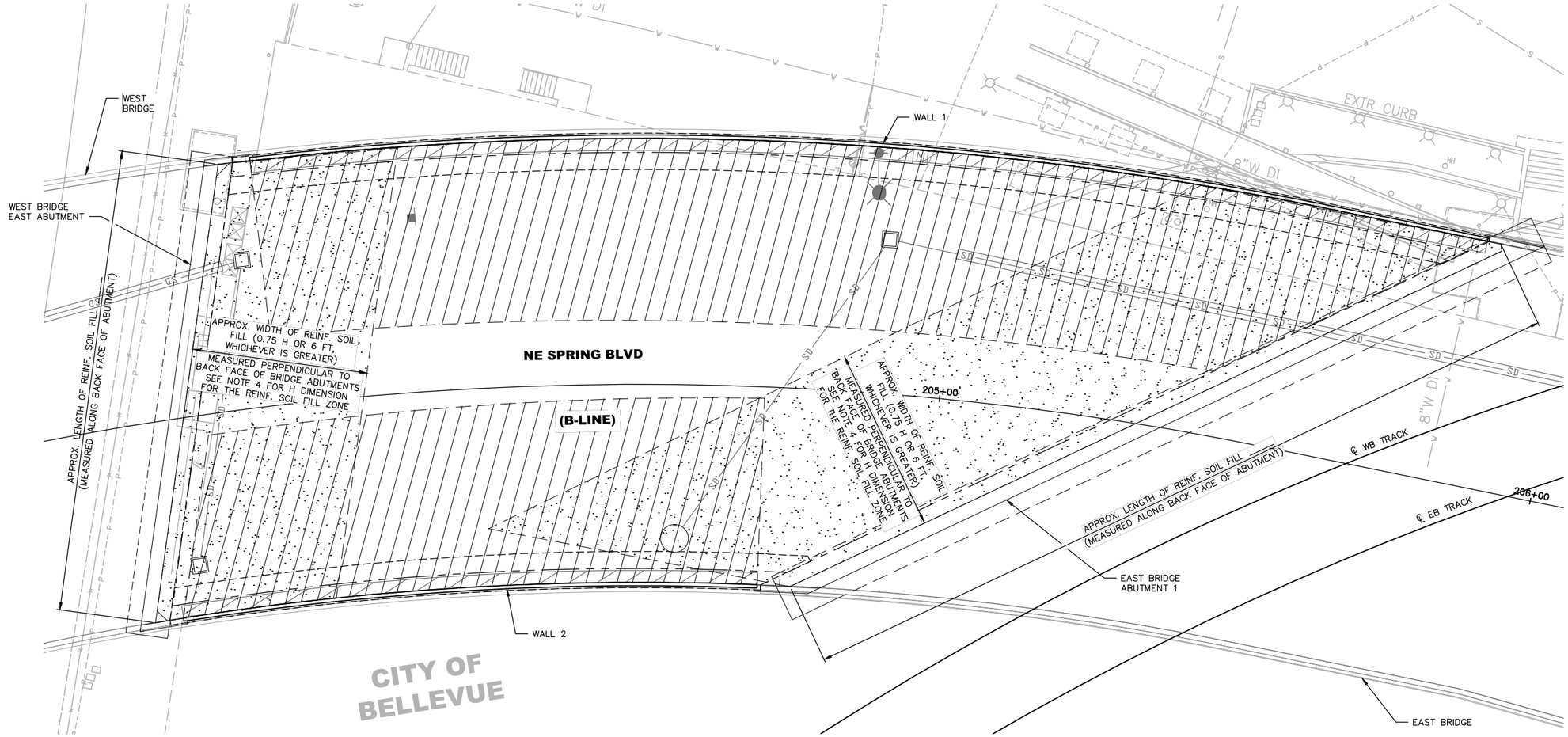

REINFORCED SOIL FILL ZONE 1 PLAN

NOTES

1. SEE SHEETS WP1 AND WP2 FOR SE WALLS 1 AND 2 DETAILS.
2. REINFORCED LIMITS SHOWN ARE APPROXIMATE ONLY. REINFORCING LAYOUT AND LENGTHS SHALL BE DESIGNED BY THE CONTRACTOR.
3. REINFORCED SOIL FILL ZONES SHALL BE DESIGNED AND DETAILED IN CONJUNCTION WITH SE WALLS.
4. VERTICAL LIMITS FOR MEASUREMENT, H, SHALL BE TAKEN AS THE DIFFERENCE TAKEN FROM TOP OF SHAFT CAP TO TOP OF PAVEMENT SEAT AT EACH BRIDGE ABUTMENT.

LEGEND:

- OVERLAP/INTERACTION ZONE OF SE WALL AND REINFORCED SOIL ZONE
- REINFORCED SOIL FILL ZONE LIMITS
- SE WALL REINFORCING LIMITS

REINF. SOIL FILL ZONE 1 APPROX. QTY	
6"ø UNDER DRAIN (L.F.)	210
STRUCTURAL EXCAVATION CL. A INCL. HAUL (C.Y.)	784
GRAVEL BORROW FOR STRUCTURAL EARTH WALL INCL. HAUL (C.Y.)	3134

10 5 0 10 20
SCALE

ROBERT D. RICHARDSON
STATE OF WASHINGTON
33999
REGISTERED PROFESSIONAL ENGINEER

NO.	DATE	BY	APPR.	REVISIONS

Approved By

TRANSPORTATION DESIGN MANAGER DATE
S. COSTA
PROJECT MANAGER DATE

J. VO
DESIGNED BY DATE
L. KELLER
DRAWN BY DATE
J. LEM
CHECKED BY DATE

City of Bellevue
TRANSPORTATION DEPARTMENT

HDR

NE SPRING BLVD - ZONE 1B
90% DESIGN

REINFORCED SOIL FILL ZONE 1

SHEET NAME **WP7**

SHT 69 OF 184

SECTION 28, T. 25 N., R5E., W.M.
KING COUNTY

90% SUBMITTAL NOT FOR CONSTRUCTION

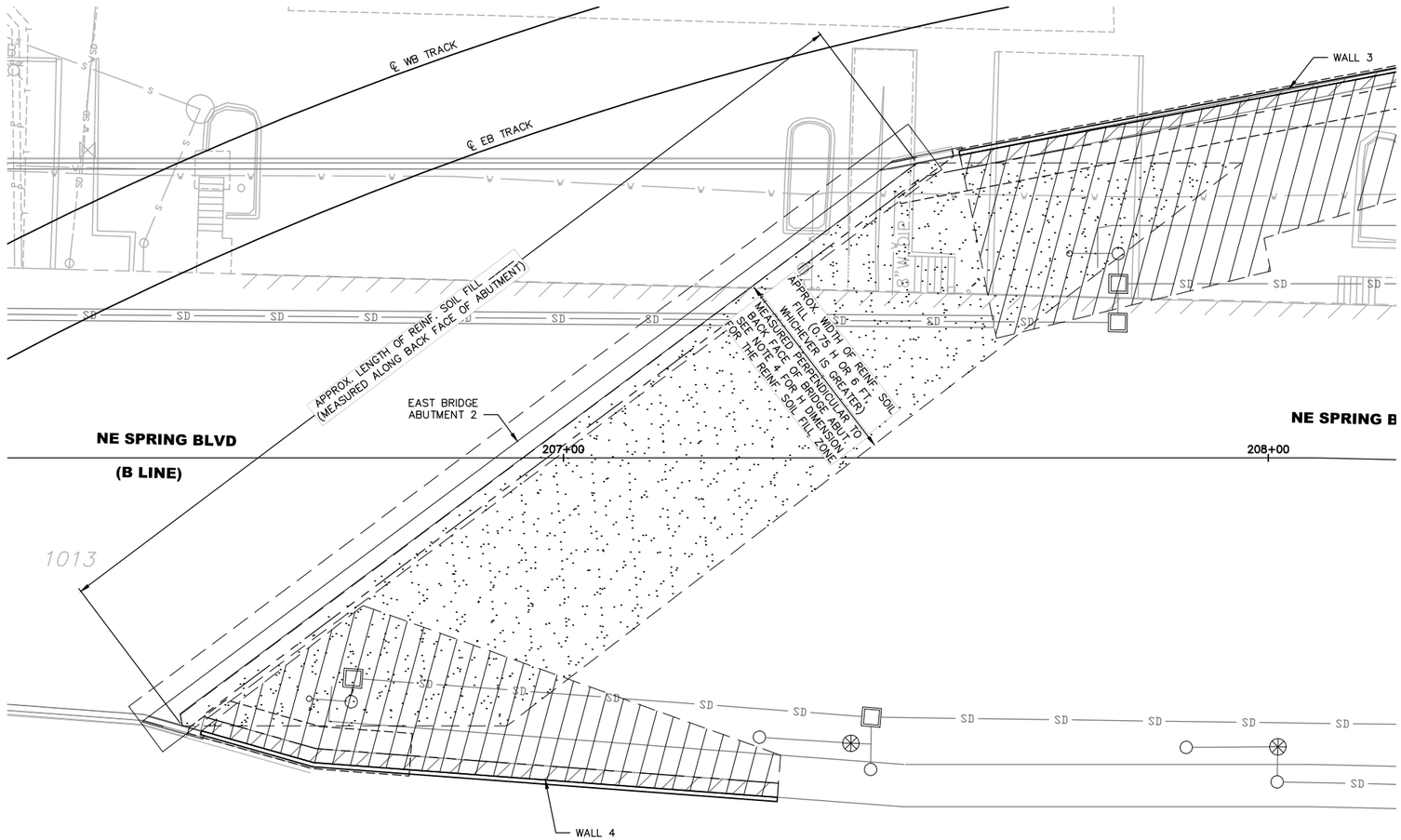

REINFORCED SOIL FILL ZONE 2 PLAN

NOTES

1. SEE SHEETS WP3 THRU WP5 FOR SE WALL 3 AND 4 DETAILS.
2. REINFORCED LIMITS SHOWN ARE APPROXIMATE ONLY. REINFORCING LAYOUT AND LENGTHS SHALL BE DESIGNED BY THE CONTRACTOR.
3. REINFORCED SOIL FILL ZONES SHALL BE DESIGNED AND DETAILED IN CONJUNCTION WITH SE WALLS.
4. VERTICAL LIMITS FOR MEASUREMENT H SHALL BE TAKEN AS THE DIFFERENCE TAKEN FROM TOP OF SHAFT CAP TO TOP OF PAVEMENT SEAT AT EACH BRIDGE ABUTMENT.

LEGEND:

- OVERLAP/INTERACTION ZONE OF SE WALL AND REINFORCED SOIL ZONE
- REINFORCED SOIL FILL ZONE LIMITS
- APROX. LIMITS OF SE WALL REINFORCING

APPROXIMATE QUANTITIES	
REINF. SOIL FILL – ZONE 1 APPROX. QTY	
6"ø UNDER DRAIN (L.F.)	132
STRUCTURAL EXCAVATION CL. A INCL. HAUL (C.Y.)	945
GRAVEL BORROW FOR STRUCTURAL EARTH WALL INCL. HAUL (C.Y.)	2946

10 5 0 10 20
SCALE

ROBERT D. RICHARDSON
STATE OF WASHINGTON
13999
REGISTERED PROFESSIONAL ENGINEER

NO.	DATE	BY	APPR.	REVISIONS

Approved By

TRANSPORTATION DESIGN MANAGER DATE
S. COSTA
PROJECT MANAGER DATE

J. VO DESIGNED BY DATE
L. KELLER DRAWN BY DATE
J. LEM CHECKED BY DATE

City of Bellevue
TRANSPORTATION DEPARTMENT

HDR

NE SPRING BLVD - ZONE 1B
90% DESIGN

REINFORCED SOIL FILL ZONE 2

SHEET NAME **WP8**

SHT 70 OF 184

SECTION 28, T. 25 N., R5E., W.M.
KING COUNTY

90% SUBMITTAL NOT FOR CONSTRUCTION

NOTE TO REVIEWER:

SEW PEDESTRIAN BARRIER AND MOMENT SLAB PLANS TO BE COMPLETED POST 90%.

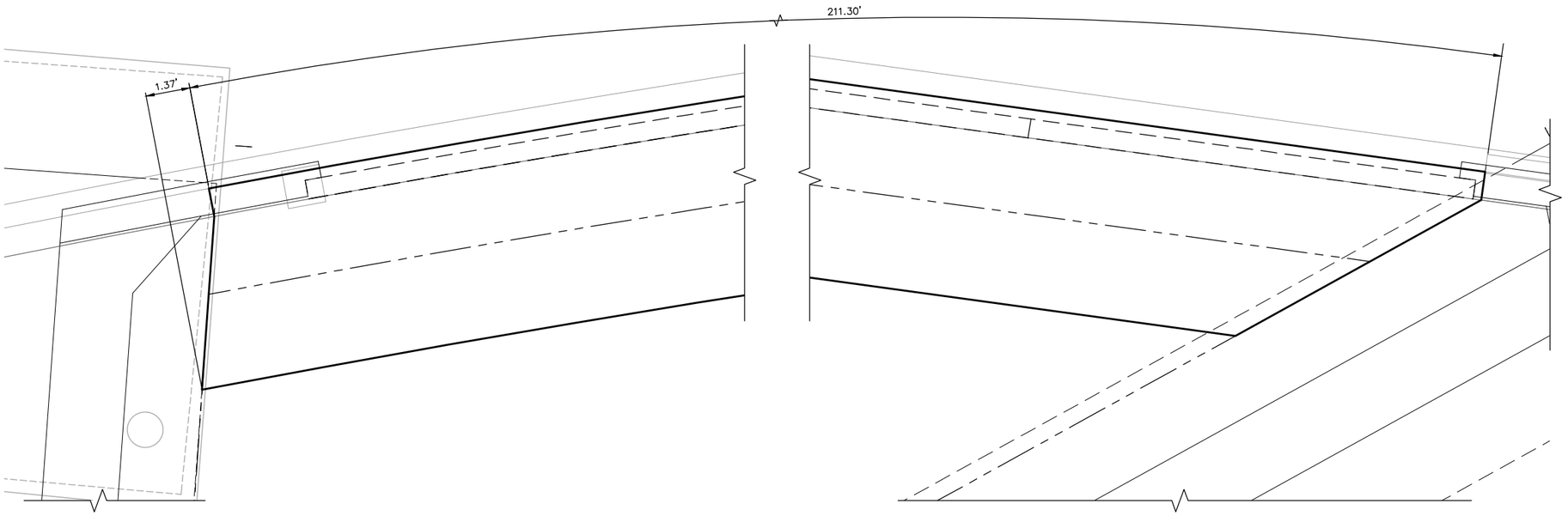

WALL 1 – MOMENT SLAB PLAN

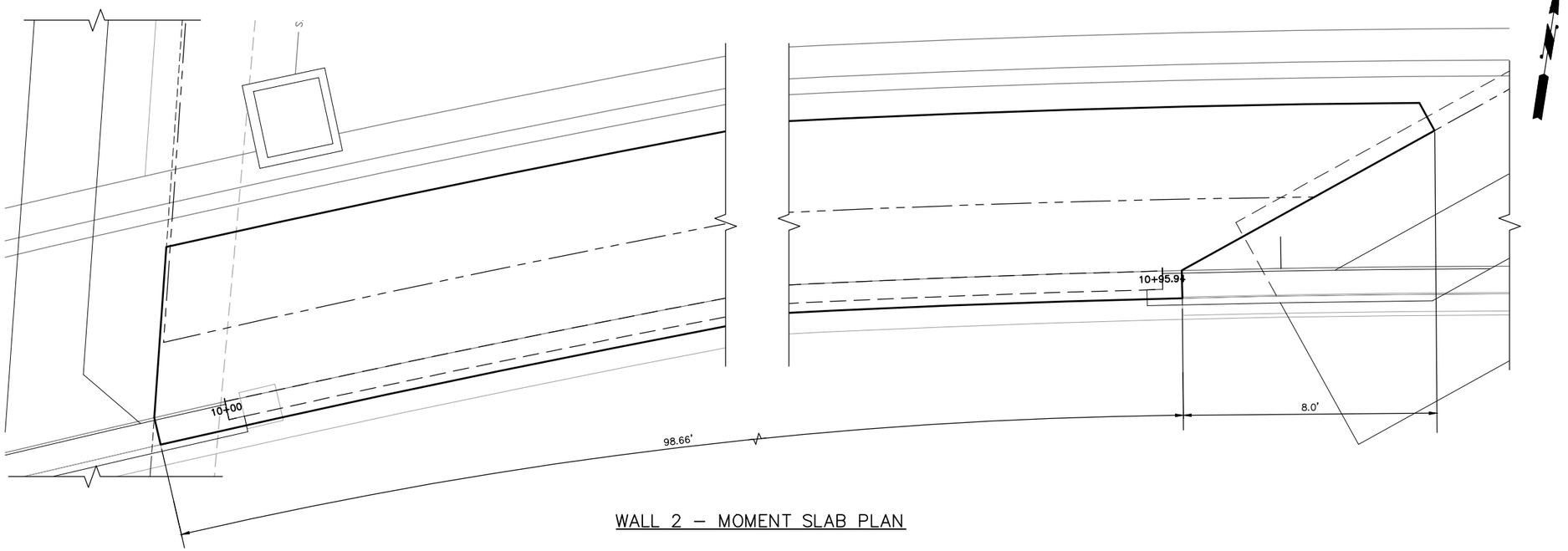

WALL 2 – MOMENT SLAB PLAN

SCALE 2 1 0 2 4

RODNEY D. RICHARDSON STATE OF WASHINGTON 13999 REGISTERED PROFESSIONAL ENGINEER

NO.	DATE	BY	APPR.	REVISIONS

Approved By

TRANSPORTATION DESIGN MANAGER DATE
S. COSTA
PROJECT MANAGER DATE

J. VO
DESIGNED BY DATE
L. KELLER
DRAWN BY DATE
J. LEM
CHECKED BY DATE

City of Bellevue
TRANSPORTATION DEPARTMENT

HDR

NE SPRING BLVD - ZONE 1B
90% DESIGN

WALL 1 & 2
MOMENT SLAB PLAN

SHEET NAME **WP9**

SHT 71 OF 184

SECTION 28, T. 25 N., R5E., W.M.
KING COUNTY

90% SUBMITTAL NOT FOR CONSTRUCTION

NOTE TO REVIEWER:

SEW PEDESTRIAN BARRIER AND MOMENT SLAB PLANS TO BE COMPLETED POST 90%.

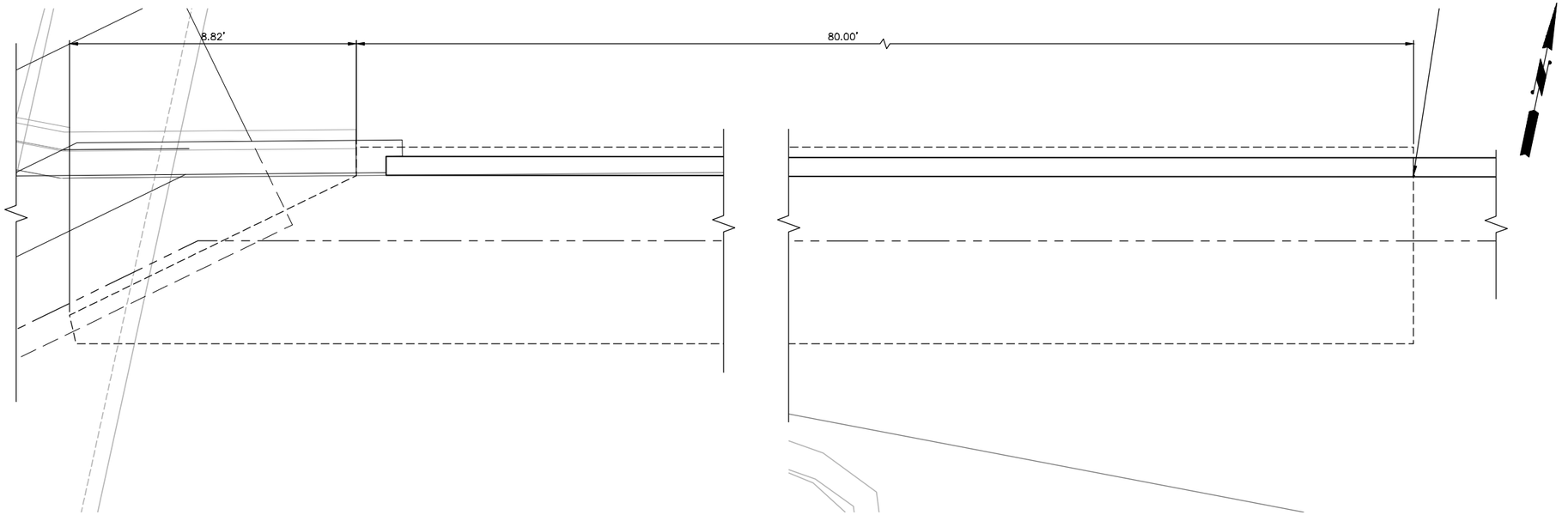

WALL 3 – MOMENT SLAB PLAN

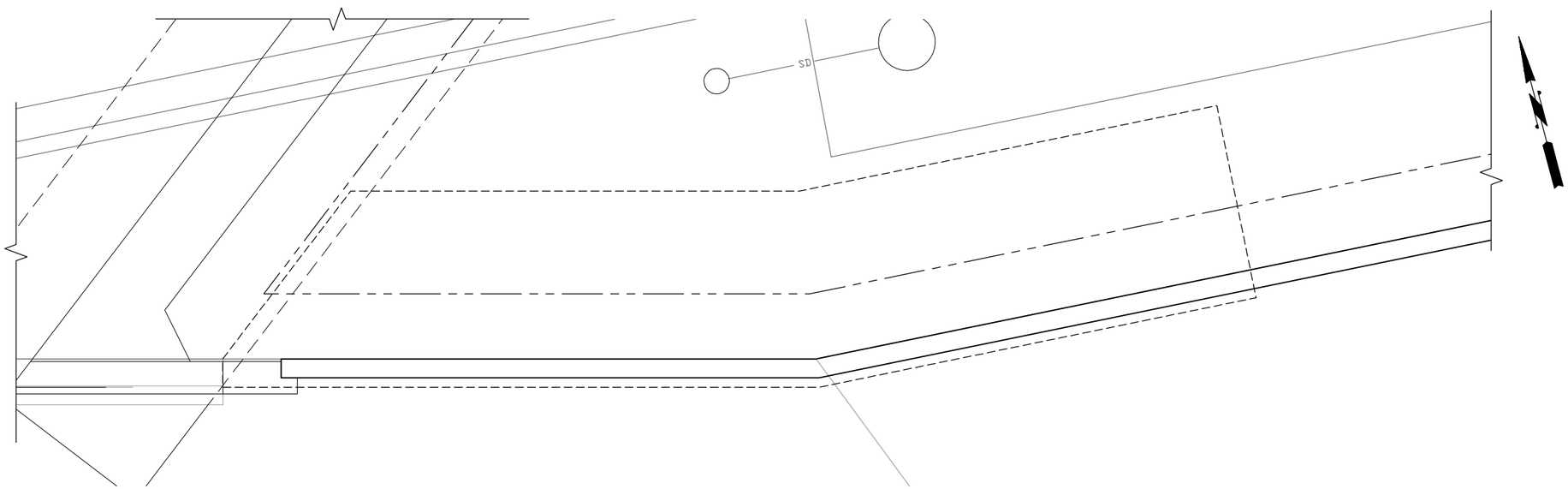

WALL 4 – MOMENT SLAB PLAN

SCALE 2 1 0 2 4

ROBERT D. RICHARDSON STATE OF WASHINGTON 33999 REGISTERED PROFESSIONAL ENGINEER

NO.	DATE	BY	APPR.	REVISIONS

Approved By

TRANSPORTATION DESIGN MANAGER DATE

S. COSTA

PROJECT MANAGER DATE

J. VO — DESIGNED BY DATE

J. VO — DRAWN BY DATE

R. RICHARDSON — CHECKED BY DATE

City of Bellevue
TRANSPORTATION DEPARTMENT

HDR

NE SPRING BLVD - ZONE 1B
90% DESIGN

WALL 3 & 4
MOMENT SLAB PLAN

SHEET NAME **WP10**

SHT X OF X

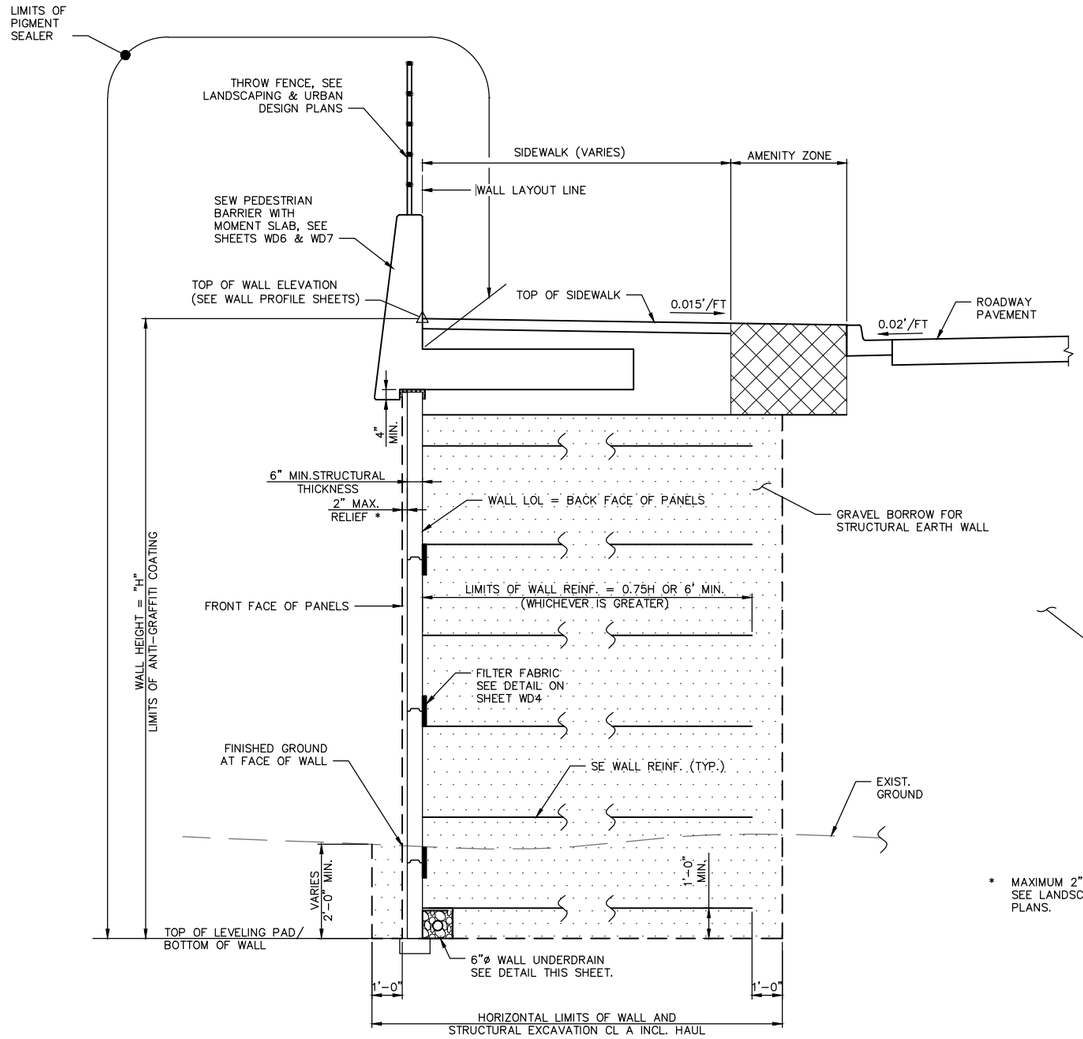

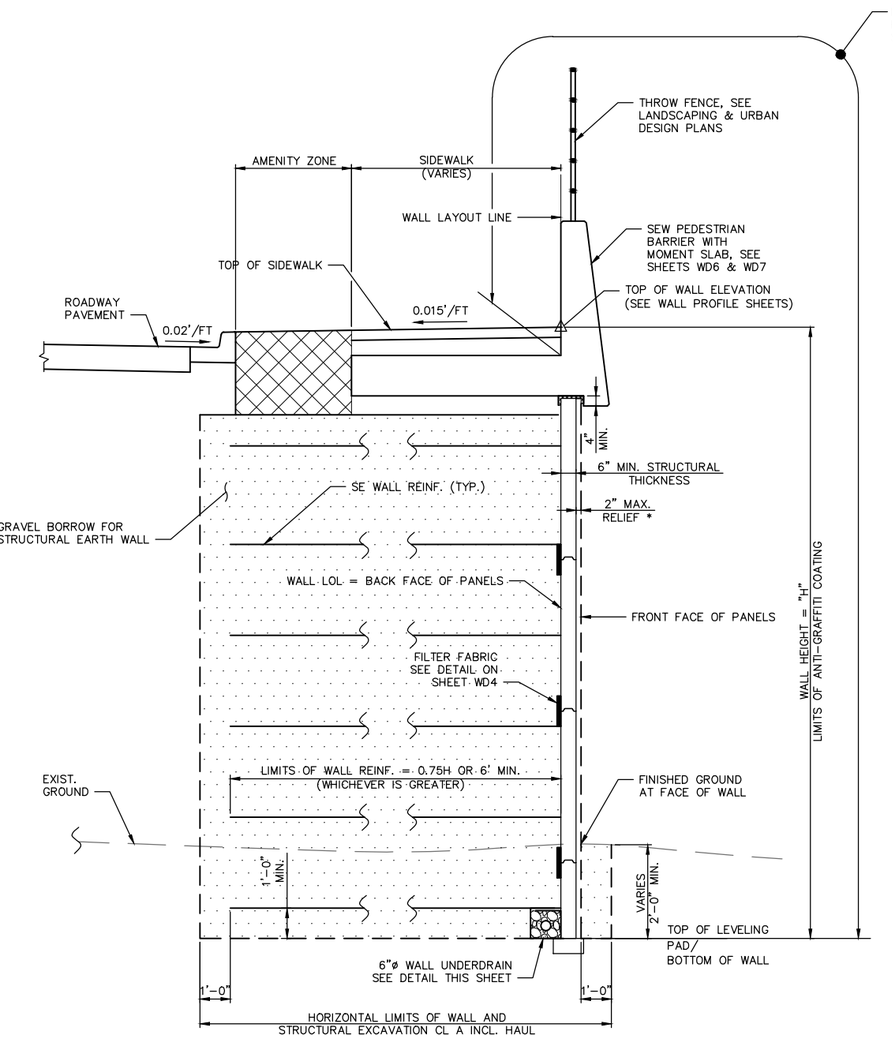

* MAXIMUM 2" ARCHITECTURAL TREATMENT, SEE LANDSCAPE AND URBAN DESIGN PLANS.

TYPICAL SECTION A

SCALE: 1"=30'

WALL 1: B STA. 203+89.53 TO STA. 205+84.36
WALL 3: B STA. 207+56.24 TO STA. 208+32.64

WP1, WP3

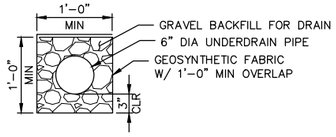

UNDERDRAIN DETAIL

N.T.S.

TYPICAL SECTION B

SCALE: 1"=30'

WALL 2: B STA. 203+68.45 TO STA. 204+70.82
WALL 4: B STA. 206+48.66 TO STA. 206+78.17

WP2, WP6

ROBERT D. JOHNSON — STATE OF WASHINGTON — 33999 — REGISTERED PROFESSIONAL ENGINEER

NO.	DATE	BY	APPR.	REVISIONS

Approved By

TRANSPORTATION DESIGN MANAGER — DATE
S. COSTA
PROJECT MANAGER — DATE

J. VO — DESIGNED BY — DATE
L. KELLER — DRAWN BY — DATE
J. LEM — CHECKED BY — DATE

City of Bellevue
TRANSPORTATION DEPARTMENT

HDR

NE SPRING BLVD - ZONE 1B
90% DESIGN

STRUCTURAL EARTH WALL
PANEL FACED - TYPICAL SECTIONS 1

SHEET NAME **WD1**

SHT 73 OF 185

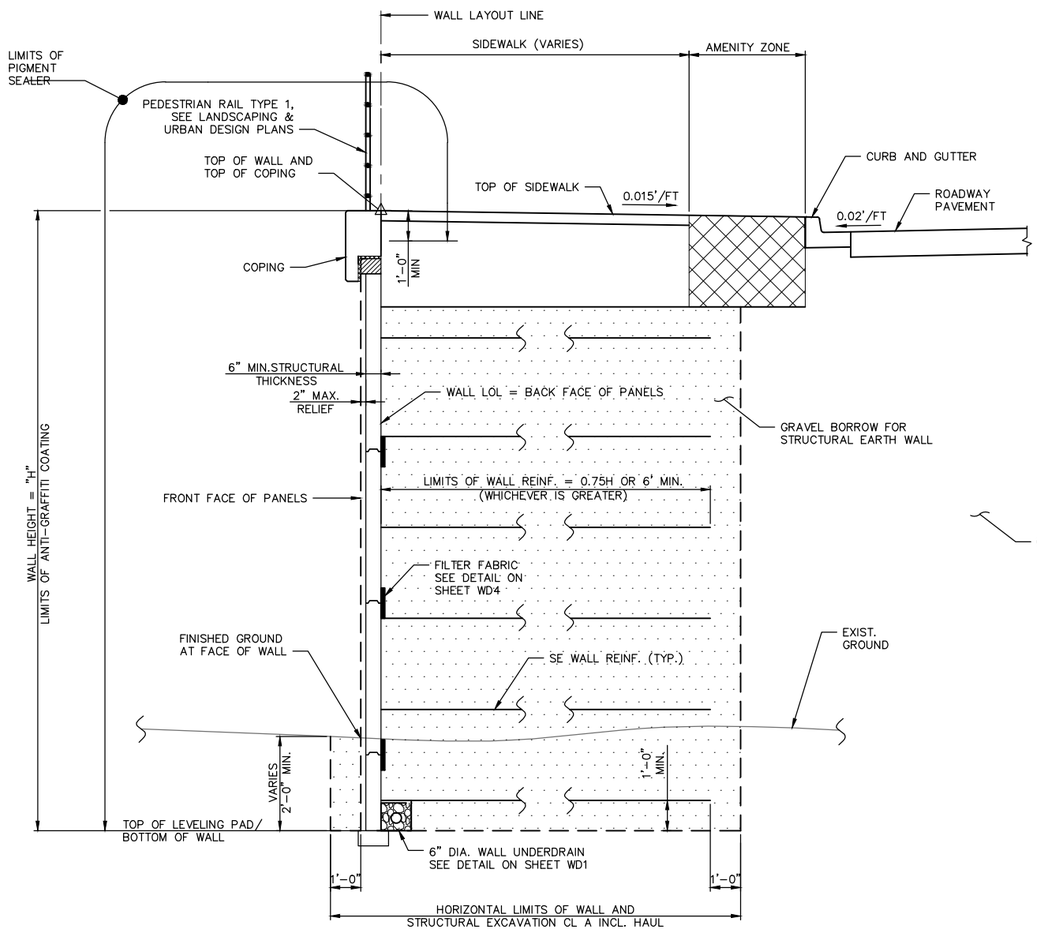

TYPICAL SECTION C

SCALE: 1"=30'

WALL 3: B-LINE STA. 208+32.64 TO STA. 209+44.03

WP3, WP4

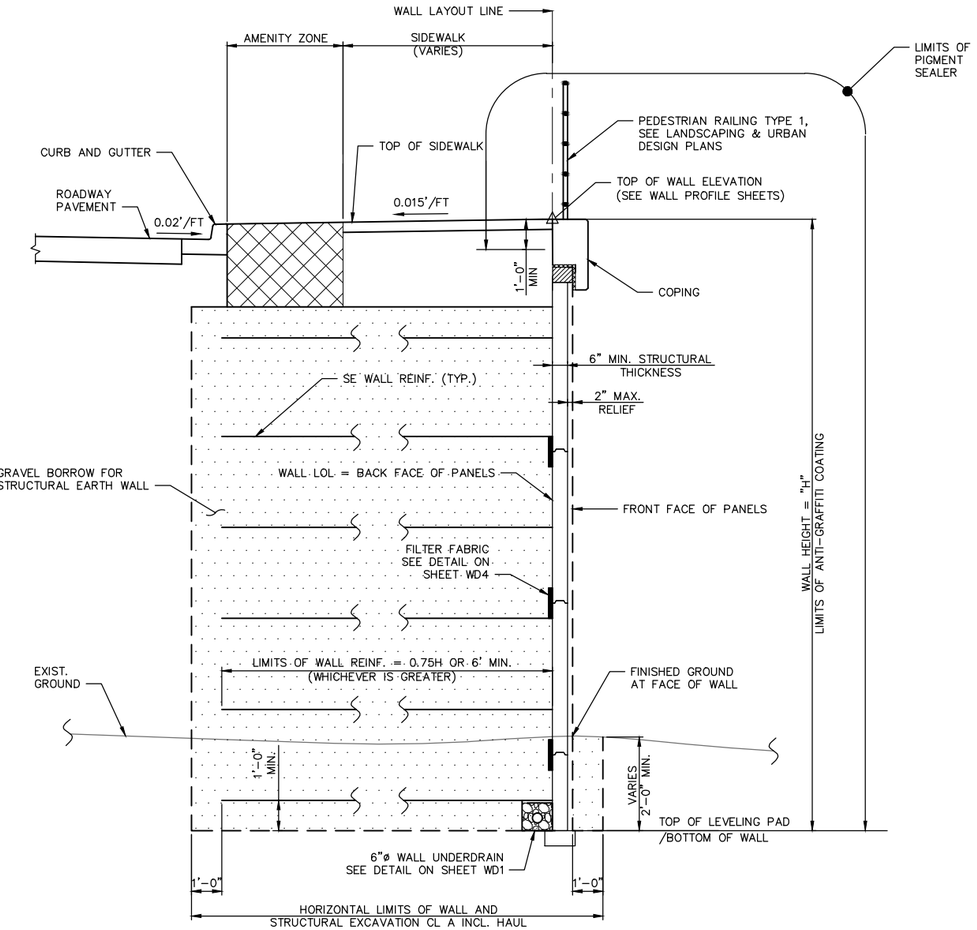

TYPICAL SECTION D

SCALE: 1"=30'

WALL 4: B-LINE STA. 206+78.17 TO STA. 207+30.35

WP4, WP6

ROBERT D. RICHMOND — STATE OF WASHINGTON — 33999 — REGISTERED PROFESSIONAL ENGINEER

NO.	DATE	BY	APPR.	REVISIONS

Approved By

TRANSPORTATION DESIGN MANAGER — DATE
S. COSTA
PROJECT MANAGER — DATE

J. VO — DESIGNED BY — DATE
L. KELLER — DRAWN BY — DATE
J. LEM — CHECKED BY — DATE

City of Bellevue
TRANSPORTATION DEPARTMENT

HDR

NE SPRING BLVD - ZONE 1B
90% DESIGN

STRUCTURAL EARTH WALL
PANEL FACED - TYPICAL SECTIONS 2

SHEET NAME: **WD2**

SHT 74 OF 185

90% SUBMITTAL NOT FOR CONSTRUCTION

NOTES:
1. WALL REINFORCING SHOWN AS SCHEMATIC ONLY. ACTUAL REINFORCING LAYOUT WILL VARY WITH WALL MANUFACTURER AND REINFORCING SYSTEM USED.
2. CONTRACTOR SHALL COORDINATE THE WALL REINFORCING LAYOUT TO AVOID OBSTRUCTIONS AND UTILITIES. SEE SHEET WD5 ADDITIONAL DETAILS.
3. SEE LANDSCAPE AND URBAN DESIGN PLANS FOR ARCHITECTURAL TREATMENT DETAILS.

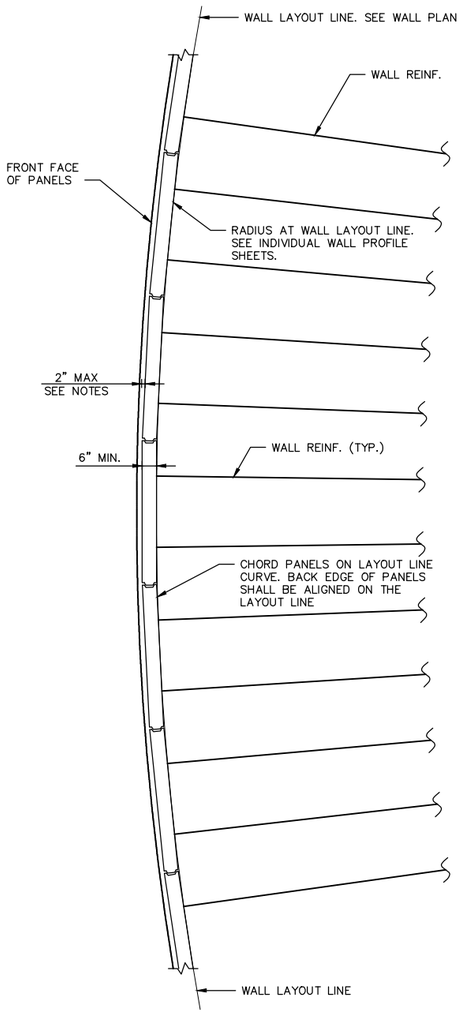

INSIDE RADIUS LAYOUT TYP. 1
NTS

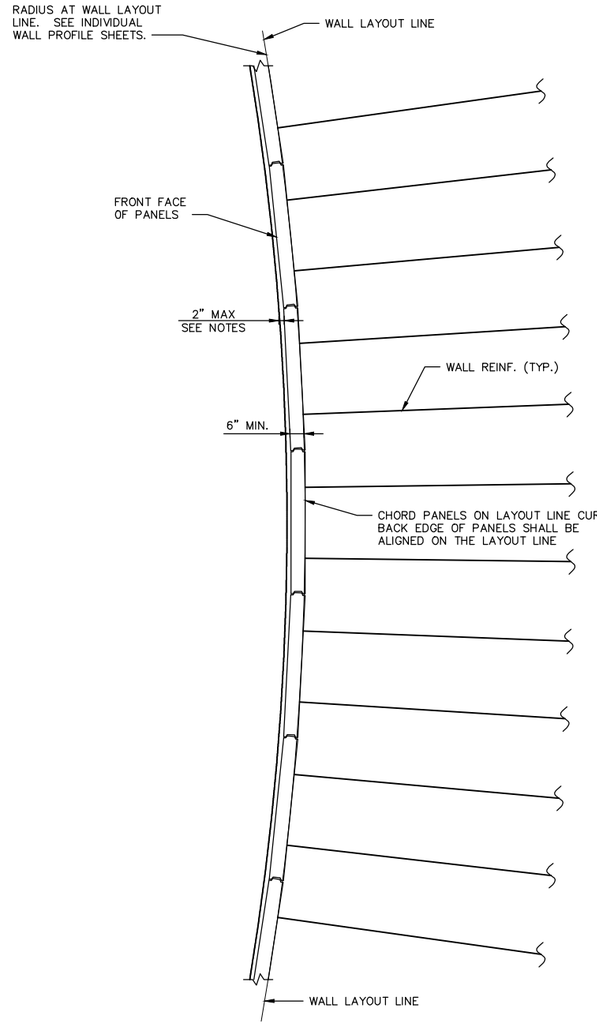

OUTSIDE RADIUS LAYOUT TYP. 2
NTS

NO.	DATE	BY	APPR.	REVISIONS

Approved By

TRANSPORTATION DESIGN MANAGER DATE
S. COSTA
PROJECT MANAGER DATE

J. VO
DESIGNED BY DATE
L. KELLER
DRAWN BY DATE
J. LEM
CHECKED BY DATE

City of Bellevue
TRANSPORTATION DEPARTMENT

HDR

NE SPRING BLVD - ZONE 1B
90% DESIGN

STRUCTURAL EARTH WALL
PANEL FACED - CURVED LAYOUT LINE DETAIL

SHEET NAME **WD3**

SHT 75 OF 185

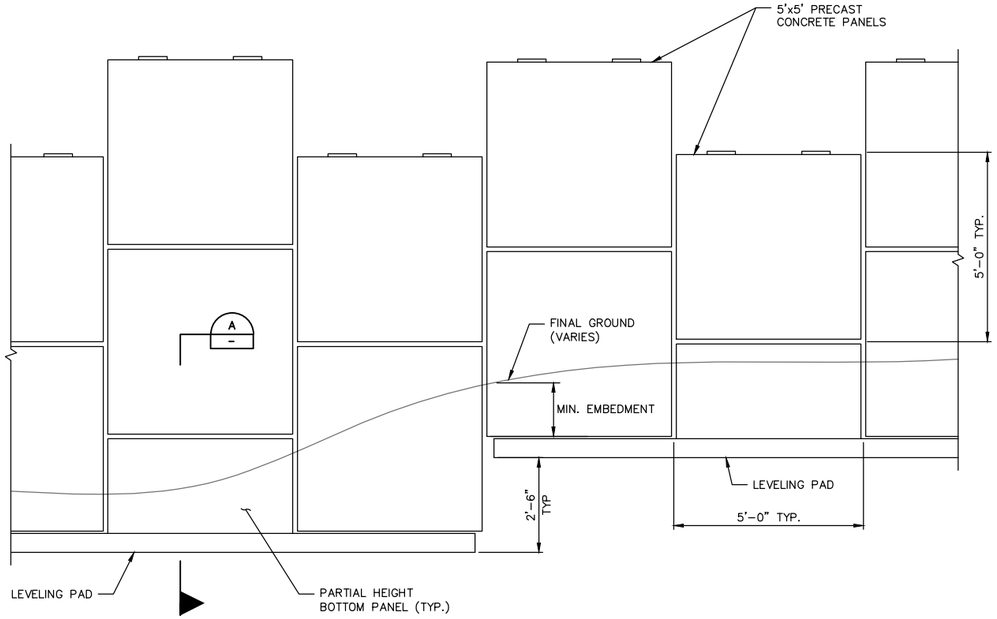

LEVELING PAD & STEP DETAIL
NTS (FRONT VIEW)

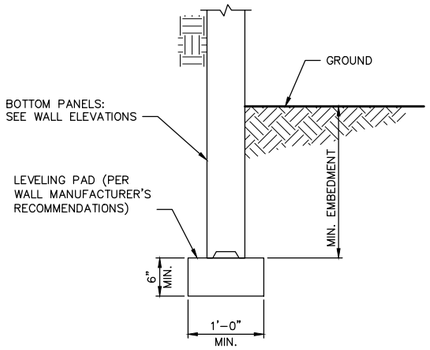

LEVELING PAD SECTION
NTS A

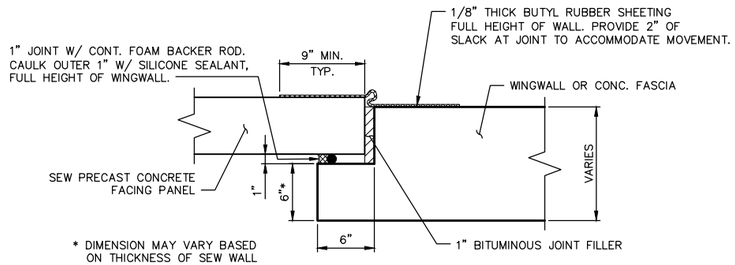

SECTION
NTS B

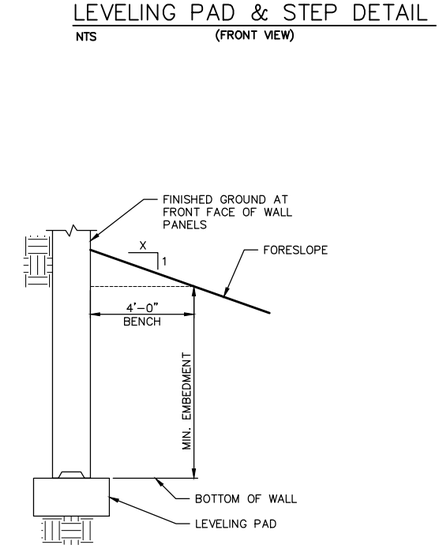

BOTTOM OF WALL EMBEDMENT
NTS

WALL EMBEDMENT	
FORE SLOPE X:1	MIN. EMBEDMENT DEPTH
2:1	H/7
3:1	H/10
LEVEL	H/20

NOTE:
AT NO POINT SHALL THE EMBEDMENT BE LESS THAN 2'-0". EMBEDMENT DEPTH SHALL BE TAKEN AT THE 4'-0" WIDE HORIZONTAL BENCH AS SHOWN.

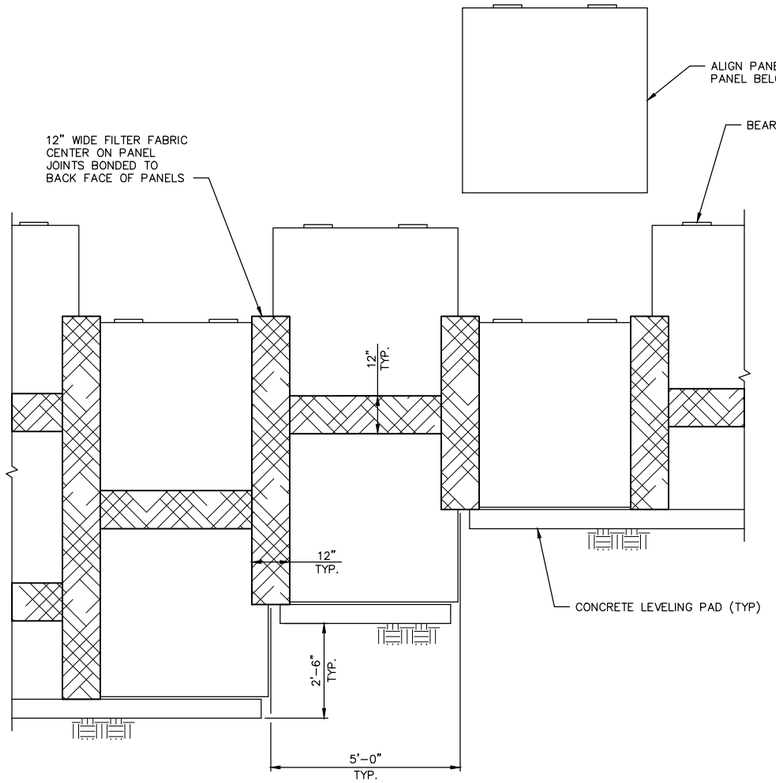

FILTER FABRIC PLACEMENT DETAIL
NTS (BACK VIEW)

NO.	DATE	BY	APPR.	REVISIONS

Approved By

TRANSPORTATION DESIGN MANAGER — DATE
S. COSTA
PROJECT MANAGER — DATE

J. VO — DESIGNED BY — DATE
L. KELLER — DRAWN BY — DATE
J. LEM — CHECKED BY — DATE

City of Bellevue
TRANSPORTATION DEPARTMENT

HDR

NE SPRING BLVD - ZONE 1B
90% DESIGN

STRUCTURAL EARTH WALL TYPICAL DETAILS

SHEET NAME WD4

SHT 76 OF 185

90% SUBMITTAL NOT FOR CONSTRUCTION

NOTES:

1. WALL REINF. SHOWN AS SCHEMATIC ONLY. ACTUAL REINF. TYPE, SIZE, AND LOCATION SHALL BE DETERMINED BY THE CONTRACTOR.
2. THE CONTRACTOR SHALL VERIFY LOCATION OF ALL UTILITIES AND OBSTRUCTIONS PRIOR TO CONSTRUCTION. WHEN OBSTRUCTIONS CANNOT BE AVOIDED, ADJUST REINF. AROUND OBSTRUCTION PER THE WALL MANUFACTURER'S RECOMMENDATIONS AND THESE PLANS.
3. STEEL COLLAR SHALL BE DESIGNED TO TRANSFER DESIGN LOADS AROUND THE OBSTRUCTIONS. ATTACHING REINF. DIRECTLY TO THE OBSTRUCTION SHALL NOT BE ALLOWED. COORDINATE STEEL COLLAR DESIGN WITH WALL REINF. DESIGN & LAYOUT.

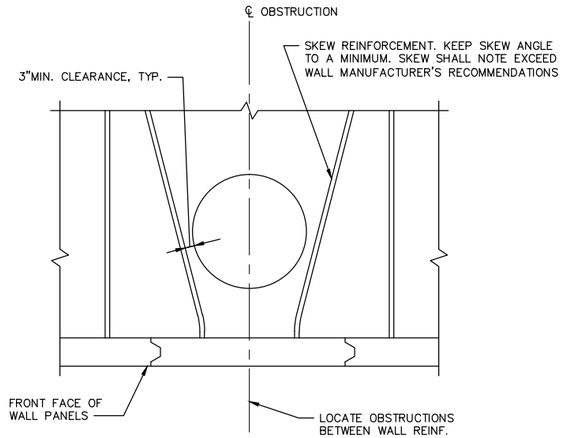

ALTERNATIVE 1

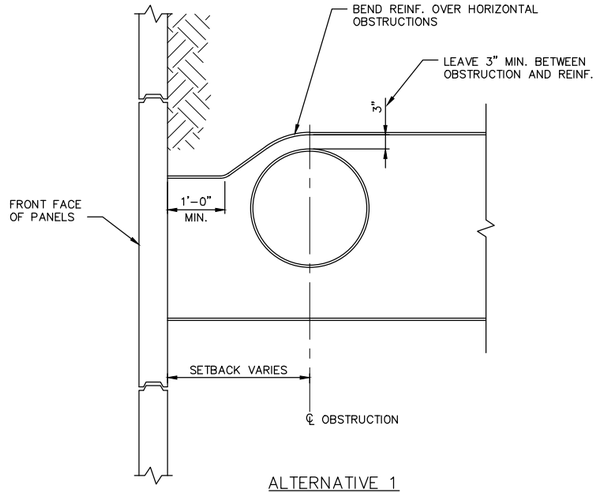

ALTERNATIVE 1

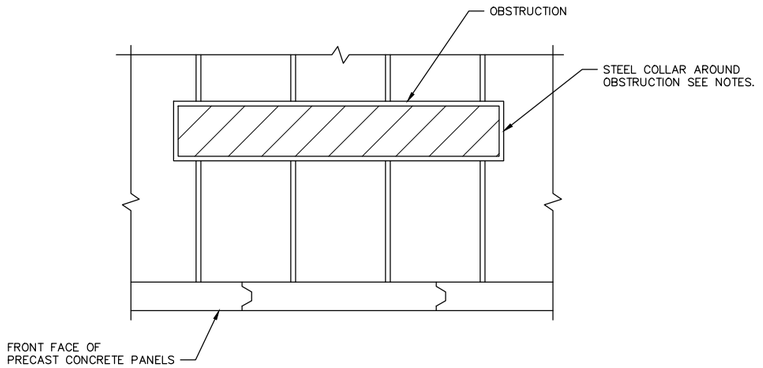

ALTERNATIVE 2

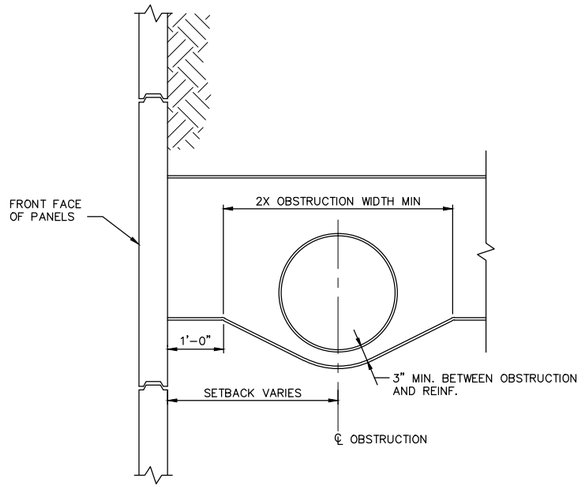

ALTERNATIVE 2

VERTICAL OBSTRUCTION PLAN 1 –
NTS

TYPICAL HORIZONTAL OBSTRUCTION DETAILS 2 –
NTS

NO.	DATE	BY	APPR.	REVISIONS

Approved By

TRANSPORTATION DESIGN MANAGER DATE
S. COSTA
PROJECT MANAGER DATE

J. VO
DESIGNED BY DATE
L. KELLER
DRAWN BY DATE
J. LEM
CHECKED BY DATE

City of Bellevue
TRANSPORTATION DEPARTMENT

HDR

NE SPRING BLVD - ZONE 1B
90% DESIGN

STRUCTURAL EARTH WALL OBSTRUCTION DETAILS

SHEET NAME WD5

SHT 77 OF 185

NOTES:

1. JOINTS IN PAVEMENT OR MOMENT SLAB SHALL COINCIDE WITH JOINTS IN BARRIER.

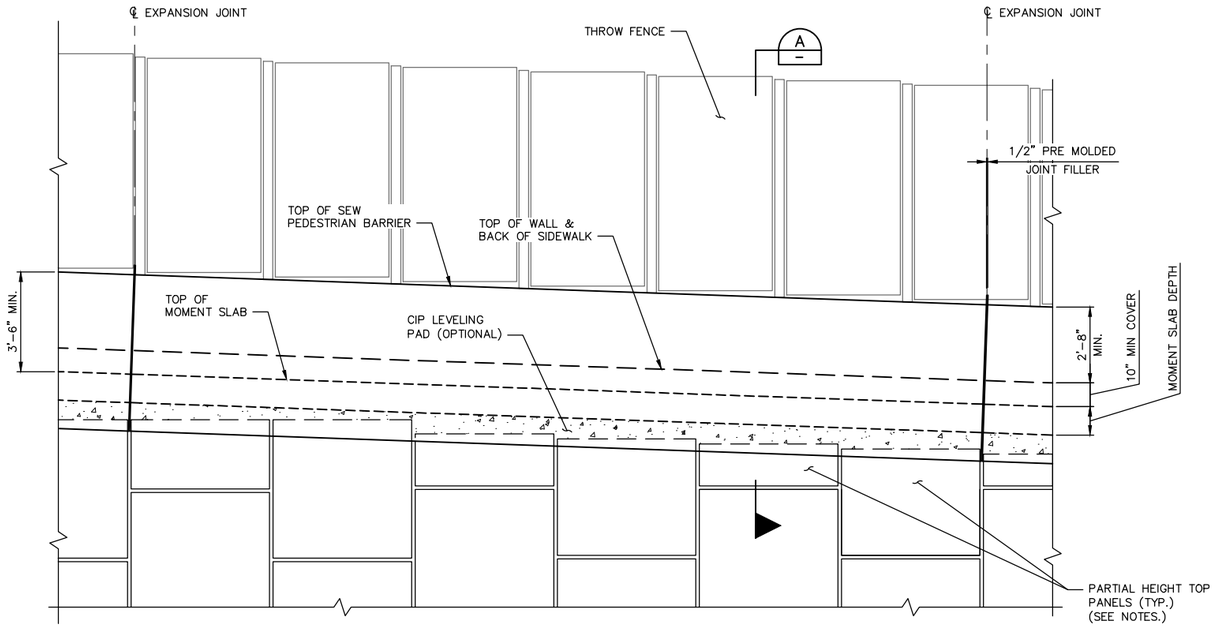

SEW PEDESTRIAN BARRIER W/ MOMENT SLAB PARTIAL ELEVATION

NTS

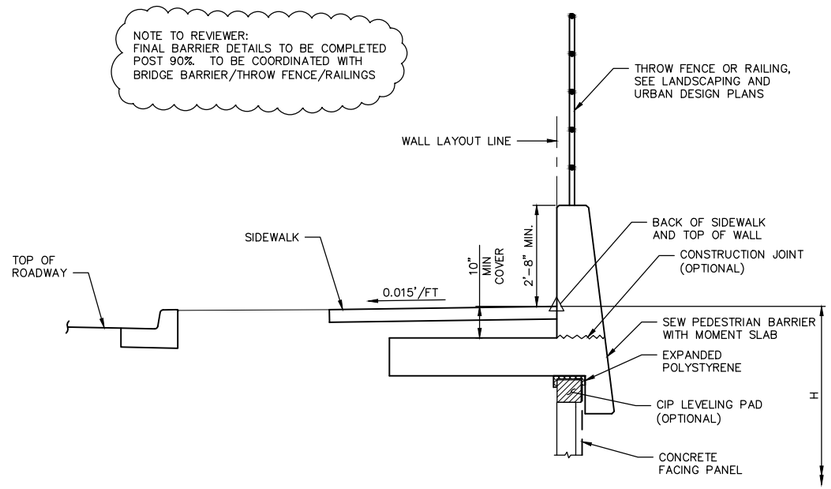

SEW PEDESTRIAN BARRIER W/ MOMENT SLAB TYPICAL SECTION

A

NTS

(WALL REINFORCING NOT SHOWN FOR CLARITY)

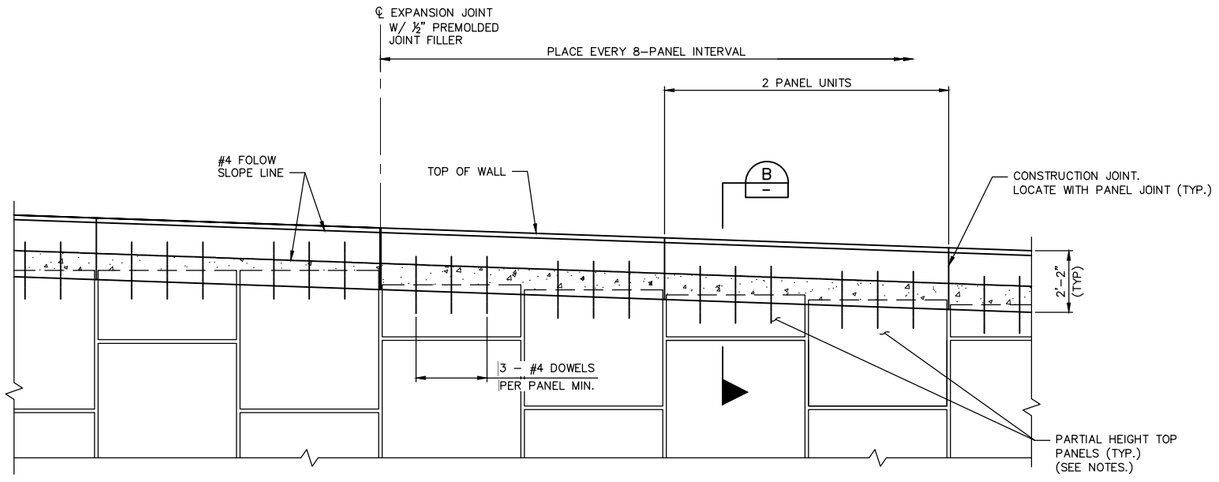

SEW COPING BARRIER PARTIAL ELEVATION

NTS

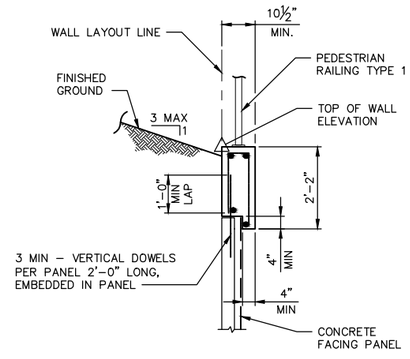

SEW WALL CIP COPING TYPICAL SECTION

B

NTS

(WALL REINFORCING NOT SHOWN FOR CLARITY)

NO.	DATE	BY	APPR.	REVISIONS

Approved By

TRANSPORTATION DESIGN MANAGER — DATE
S. COSTA
PROJECT MANAGER — DATE

J. VO — DESIGNED BY — DATE
L. KELLER — DRAWN BY — DATE
J. LEM — CHECKED BY — DATE

City of Bellevue
TRANSPORTATION DEPARTMENT

HDR

NE SPRING BLVD - ZONE 1B
90% DESIGN

STRUCTURAL EARTH WALL
TOP OF WALL DETAIL

SHEET NAME: WD6

SHT 78 OF 185

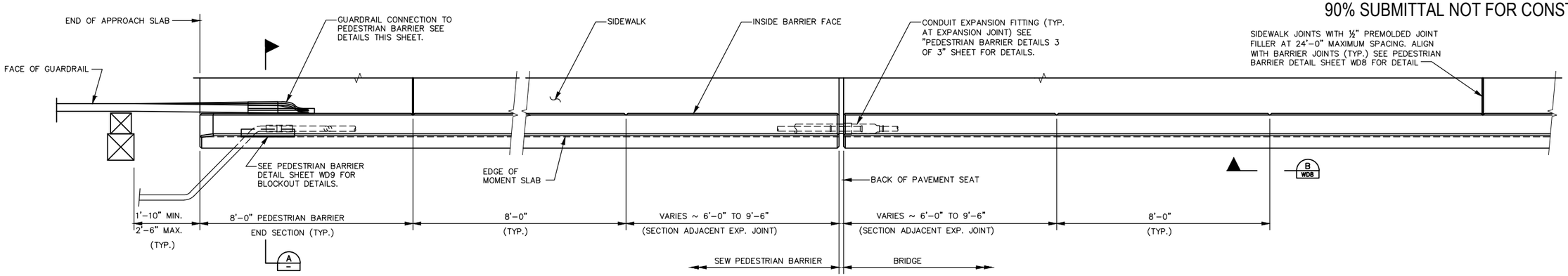

SEW PEDESTRIAN BARRIER – PARTIAL PLAN

CONSTRUCTION JOINTS WITH SHEAR KEYS ARE PERMISSIBLE AT DUMMY JOINT LOCATIONS. FORM JOINTS BETWEEN DUMMY JOINTS SHALL NOT BE PERMITTED.

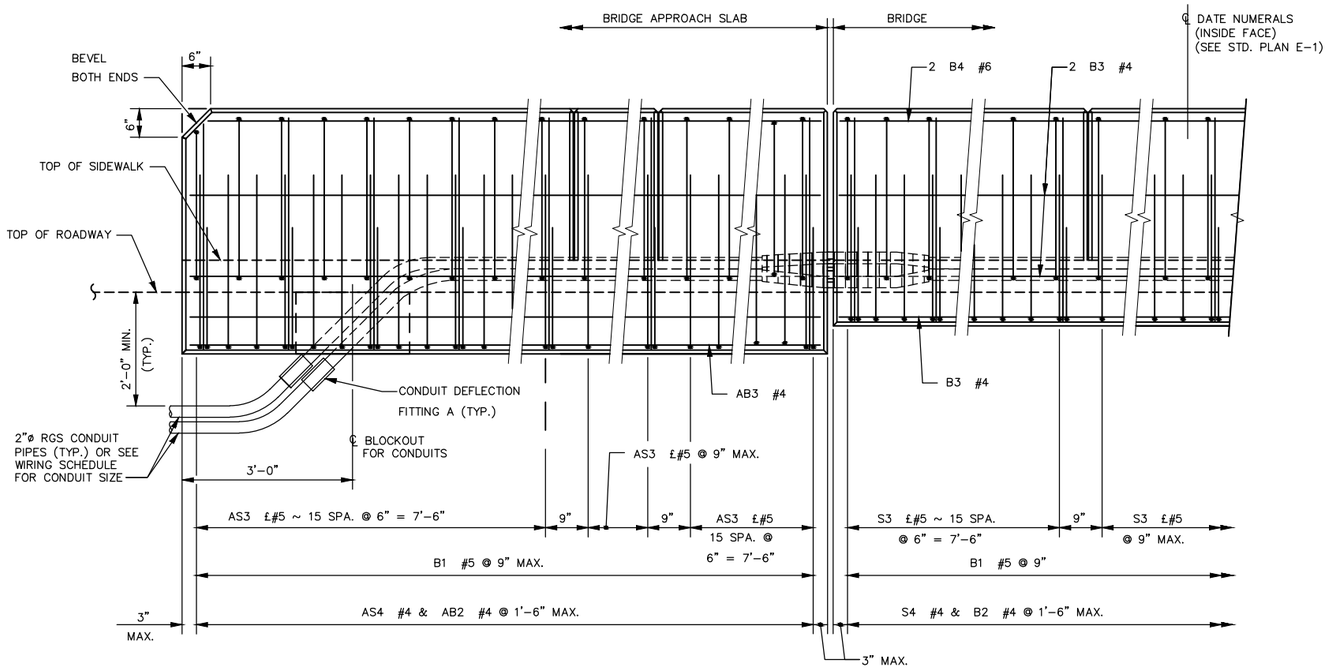

PEDESTRIAN BARRIER – PARTIAL OUTSIDE ELEVATION

SHOWN WITH APPROACH SLAB

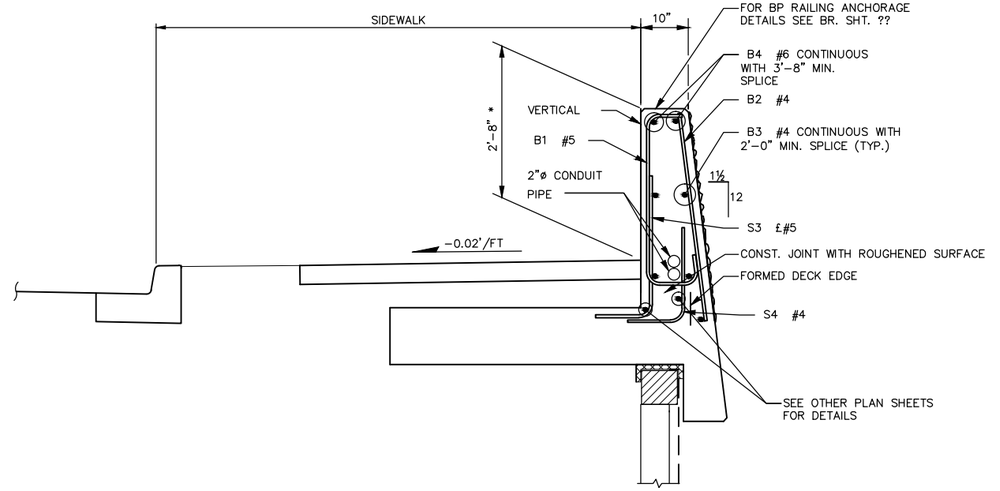

TYPICAL SECTION

PEDESTRIAN BARRIER (SHOWN ON WALL)

NOTE TO REVIEWER:
FINAL BARRIER DETAILS TO BE COMPLETED POST 90%. TO BE COORDINATED WITH BRIDGE BARRIER/THROW FENCE/RAILINGS

ROBERT D. RICHARDSON — STATE OF WASHINGTON — 13999 — REGISTERED PROFESSIONAL ENGINEER

NO.	DATE	BY	APPR.	REVISIONS

Approved By

TRANSPORTATION DESIGN MANAGER S. COSTA DATE

PROJECT MANAGER DATE

J. VO — DESIGNED BY DATE

L. KELLER — DRAWN BY DATE

J. LEM — CHECKED BY DATE

City of Bellevue
TRANSPORTATION DEPARTMENT

HDR

NE SPRING BLVD - ZONE 1B
90% DESIGN

STRUCTURAL EARTH WALLS
PEDESTRIAN BARRIER DTEAILS 1 OF 3

SHEET NAME WD7

SHT 79 OF 185

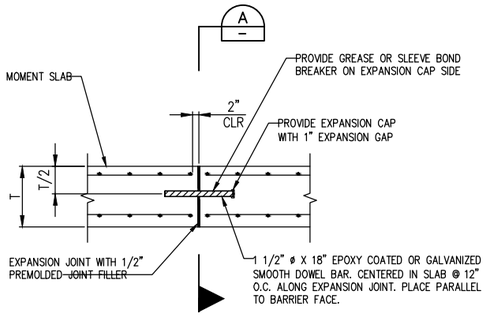

MOMENT SLAB EXPANSION JOINT (1)
N.T.S.

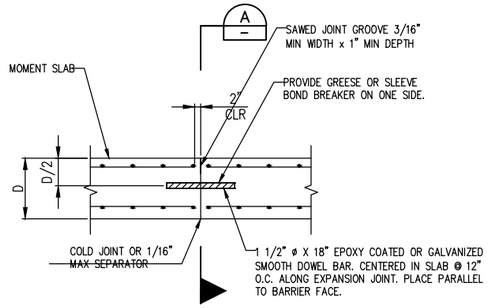

MOMENT SLAB CONTRACTION JOINT (2)
N.T.S.

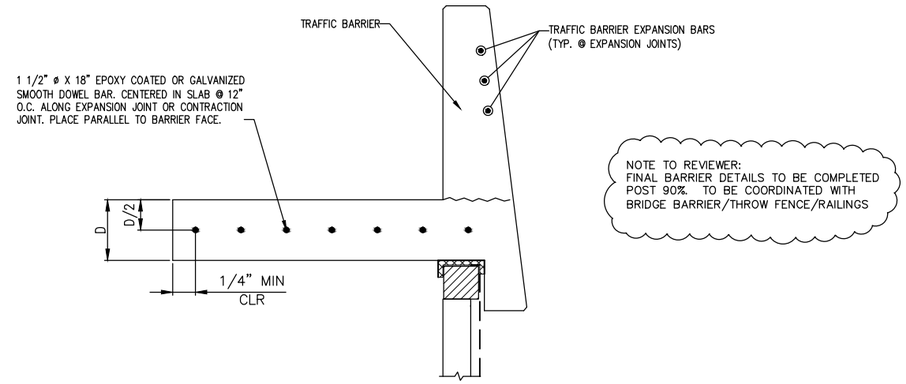

SECTION THRU MOMENT SLAB JOINT (A)
N.T.S.

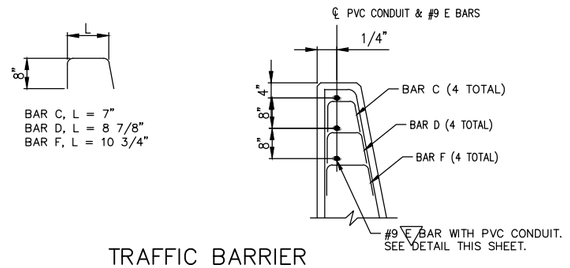

TRAFFIC BARRIER EXPANSION JOINT DETAIL (3)
N.T.S.

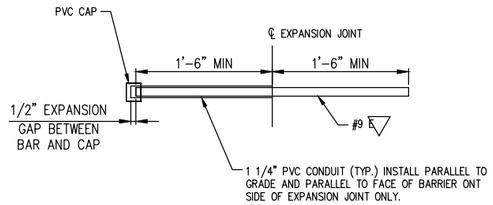

TRAFFIC BARRIER EXPANSION JOINT BAR DETAIL (4)
N.T.S.

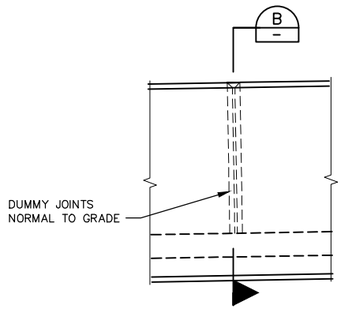

VIEW (A WD7)

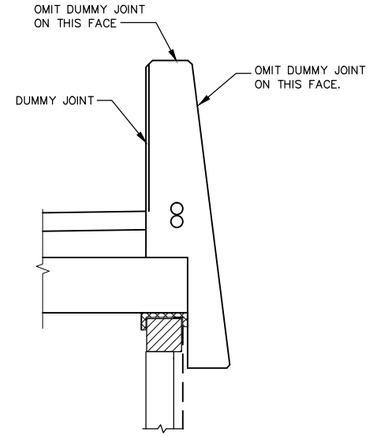

SECTION (B)

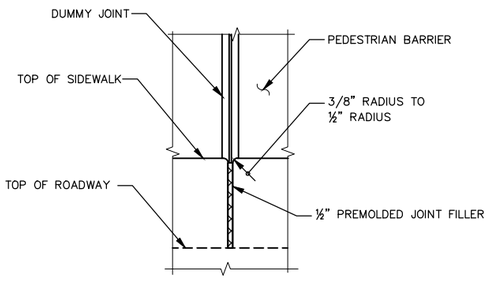

SIDEWALK JOINT DETAIL
SIDEWALK REINFORCING STEEL NOT SHOWN FOR CLARITY.

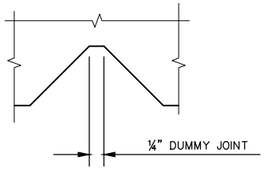

DUMMY JOINT DETAIL

BARRIER – BENDING DIAGRAM

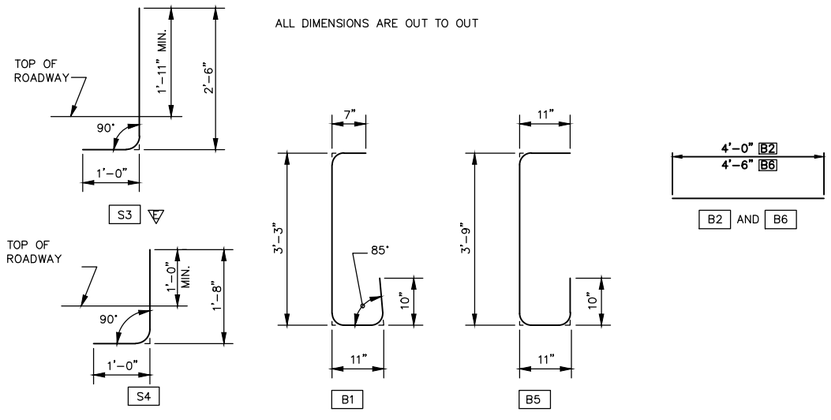

GENERAL NOTES:

1. FOR BARRIER DETAILS NOT SHOWN SEE "OUTSIDE ELEVATION" AND "TYPICAL SECTION ~ PEDESTRIAN BARRIER"
2. FOR WINGWALL REINFORCING NOT SHOWN SEE WINGWALL PLANS
3. FOR DIAPHRAGM REINFORCING NOT SHOWN SEE ABUTMENT DETAILS

JUNCTION BOX LOCATIONS		
STATION	OFFSET	TS OR LT
203+14.0	35.3 RT.	LT

TS – TRAFFIC SYSTEM
LT – LIGHTING SYSTEM
JUNCTION BOX LOCATION SHOWN IS APPROXIMATE. CENTER J–BOX BETWEEN BARRIER JOINTS.

NO.	DATE	BY	APPR.	REVISIONS

Approved By

TRANSPORTATION DESIGN MANAGER — DATE
S. COSTA
PROJECT MANAGER — DATE

J. VO — DESIGNED BY — DATE
L. KELLER — DRAWN BY — DATE
J. LEM — CHECKED BY — DATE

City of Bellevue
TRANSPORTATION DEPARTMENT

HDR

NE SPRING BLVD - ZONE 1B
90% DESIGN

STRUCTURAL EARTH WALLS
PEDESTRIAN BARRIER DTEAILS 2 OF 3

SHEET NAME WD8

SHT 80 OF 185

90% SUBMITTAL NOT FOR CONSTRUCTION

NOTE:
1. PROVIDE DRAINS AT ALL LOW POINTS IN CONDUIT RUNS ON BRIDGE OR SLOPE RUNS TO DRAIN TO ENDS OF BRIDGE.

NOTE TO REVIEWER:
FINAL BARRIER DETAILS TO BE COMPLETED POST 90%. TO BE COORDINATED WITH BRIDGE BARRIER/THROW FENCE/RAILINGS

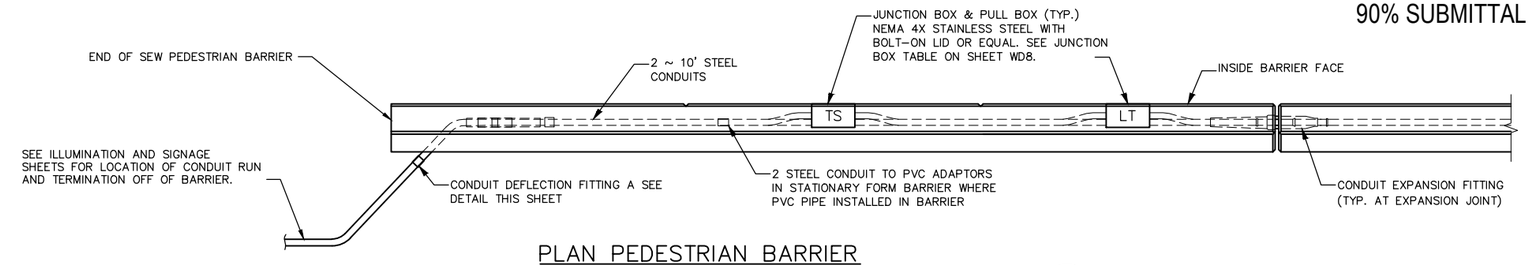

PLAN PEDESTRIAN BARRIER

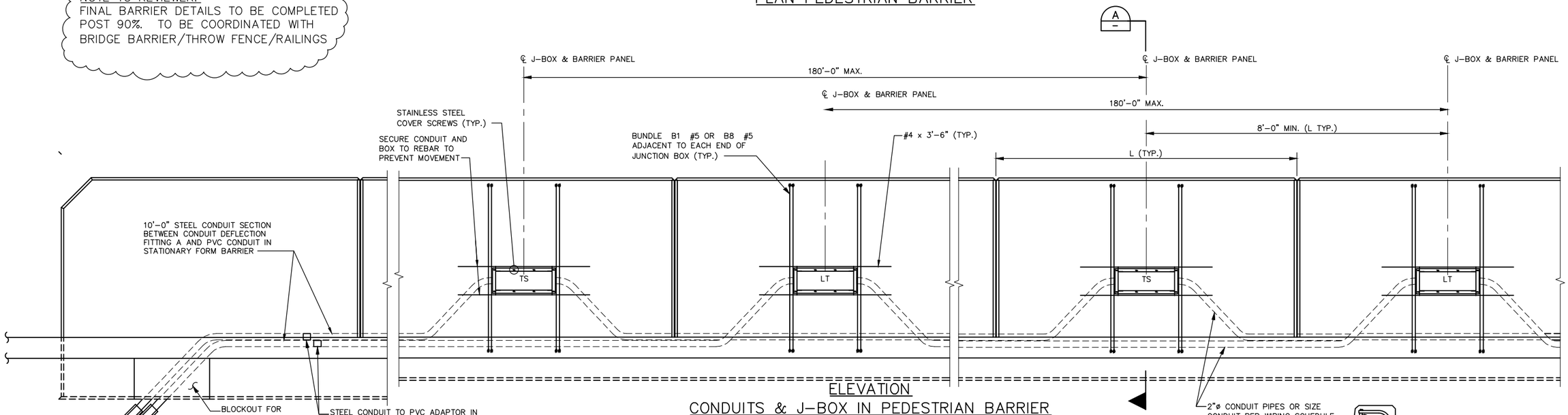

ELEVATION
CONDUITS & J-BOX IN PEDESTRIAN BARRIER

LABEL JUNCTION BOX COVER IN ACCORDANCE WITH STANDARD SPECIFICATION 9-29.2(4) AND SPECIAL PROVISIONS. ADJACENT JUNCTION BOXES ARE SHOWN CENTERED BETWEEN ADJACENT DUMMY JOINTS. IF THE DISTANCE BETWEEN ADJACENT DUMMY JOINTS IS 16'-0" OR GREATER, PLACE ADJACENT JUNCTION BOXES SYMMETRICALLY ON EITHER SIDE OF THE CENTER OF ONE DUMMY PANEL WHILE MAINTAINING 8'-0" MINIMUM BETWEEN CENTER LINES OF THE JUNCTION BOXES.

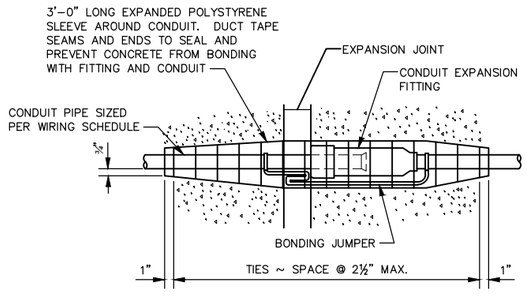

CONDUIT EXPANSION FITTING
CONDUIT FITTING – (TYPE AX FOR MOVEMENT OF ± 2") AT BRIDGE EXPANSION JOINTS

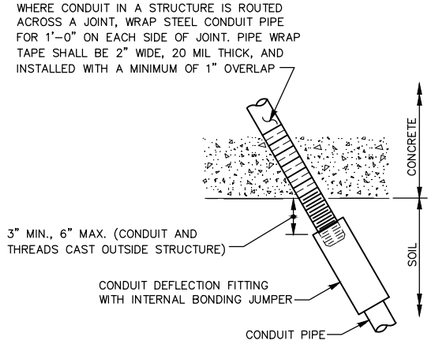

CONDUIT DEFLECTION FITTING A
CONDUIT FITTING – TYPE DX FOR DEFLECTION OF 30° AND ¾" MOVEMENT. PLACE AT CONDUIT PIPE EXIT FROM STRUCTURE

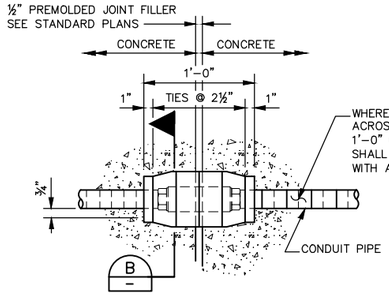

CONDUIT DEFLECTION FITTING B
CONDUIT FITTING – TYPE DX FOR DEFLECTION OF 30° AND ¾" MOVEMENT. CONDUIT PIPES PLACED THROUGH RETAINING WALL PEDESTRIAN BARRIER SHALL BE FITTED WITH DEFLECTION FITTINGS AT A MAXIMUM SPACING OF 120'. THE DEFLECTION FITTINGS SHALL BE PLACED AT THE PEDESTRIAN BARRIER OPEN JOINT THAT COINCIDES WITH THE RETAINING WALL STEM EXPANSION JOINT NEAREST TO THE TRANSVERSE CONSTRUCTION JOINT IN THE WALL FOOTING.

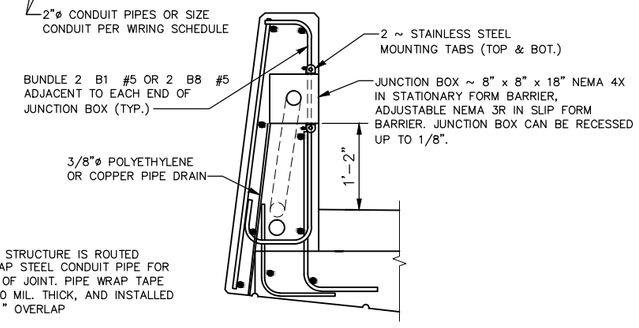

ROBERT D. RICHMOND STATE OF WASHINGTON 33999 REGISTERED PROFESSIONAL ENGINEER

NO.	DATE	BY	APPR.	REVISIONS

Approved By

TRANSPORTATION DESIGN MANAGER — DATE
S. COSTA
PROJECT MANAGER — DATE

J. VO
DESIGNED BY — DATE
L. KELLER
DRAWN BY — DATE
J. LEM
CHECKED BY — DATE

City of Bellevue
TRANSPORTATION DEPARTMENT

HDR

NE SPRING BLVD - ZONE 1B
90% DESIGN

STRUCTURAL EARTH WALLS
PEDESTRIAN BARRIER DTEAILS 3 OF 3

SHEET NAME WD9

SHT 81 OF 185

90% SUBMITTAL NOT FOR CONSTRUCTION

NOTES:
1. FOR DETAILS OF LUMINAIRES ON THE PEDESTRIAN BARRIER, REFER TO ILLUMINATION PLANS.
2. MATERIAL SPECIFICATION:
   ANCHOR BOLTS SHALL CONFORM TO THE SPECIFICATIONS OF THE LUMINAIRE POLE MANUFACTURER'S PRE-APPROVED DRAWING.

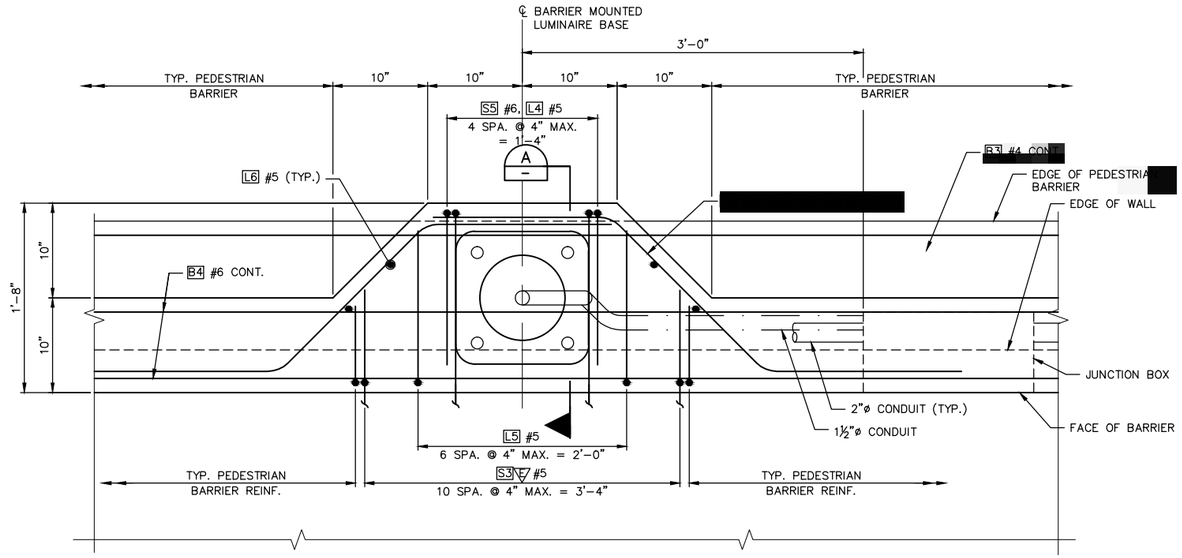

LUMINAIRE BASE ON SEW PEDESTRIAN BARRIER

NOTE TO REVIEWER:
FINAL BARRIER DETAILS TO BE COMPLETED POST 90%. TO BE COORDINATED WITH BRIDGE BARRIER/THROW FENCE/RAILINGS

LUMINAIRE ANCHORAGE BAR LIST

MARK	SIZE	NO. REQ'D	LENGTH
L1	#6	2	5'-2"
L2	#5	4	5'-2"
L3	#5	2	2'-6"
L4	#5	5	4'-9"
L5	#5	7	5'-0"
L6	#5	2	3'-8"

BENDING DIAGRAM
(ALL DIMENSIONS ARE OUT-TO-OUT)

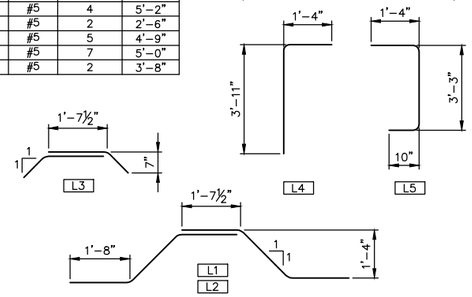

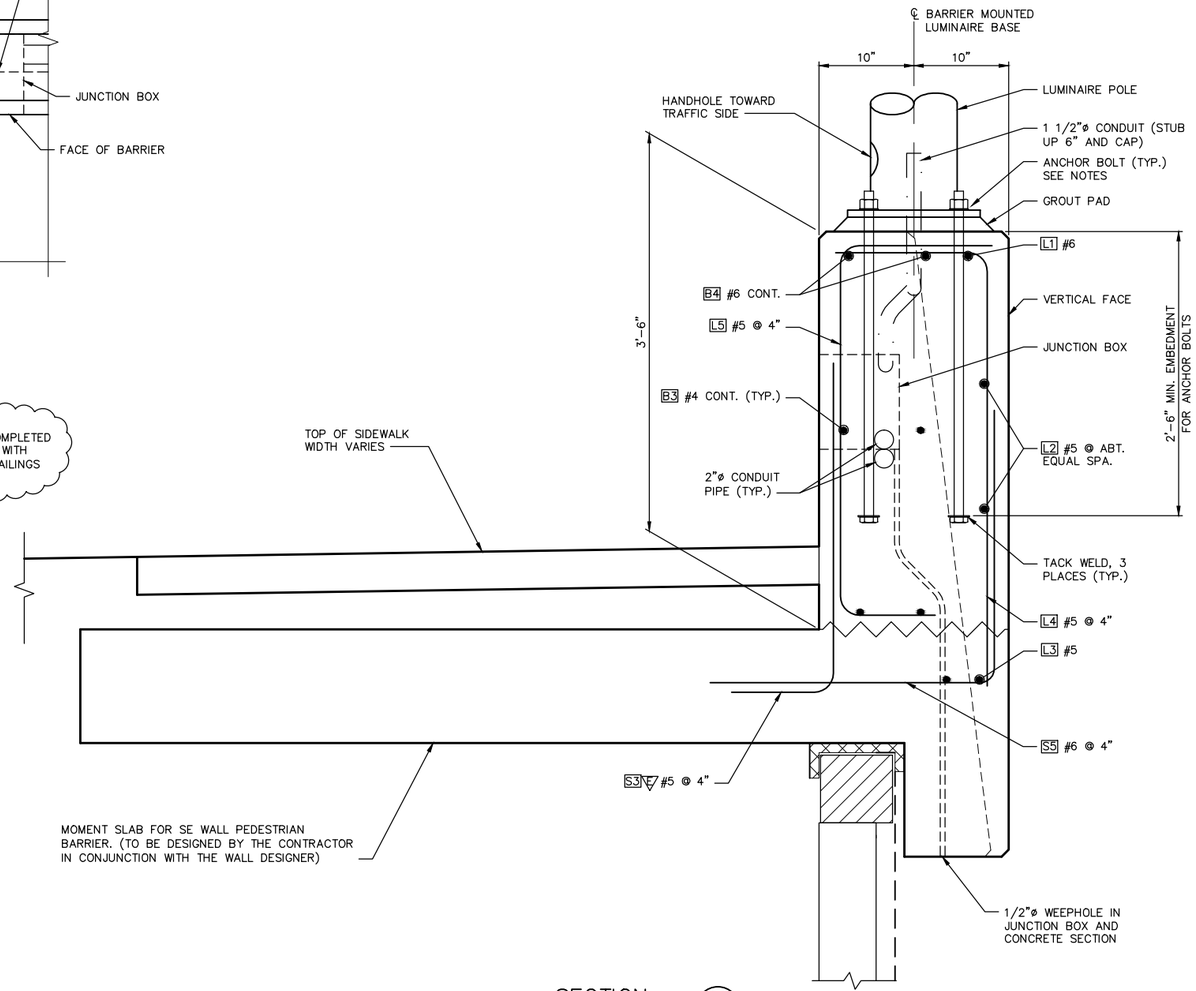

SECTION A
SCALE: 1 1/2"=1'-0"

NO.	DATE	BY	APPR.	REVISIONS

Approved By

TRANSPORTATION DESIGN MANAGER — DATE
S. COSTA
PROJECT MANAGER — DATE

J. VO — DESIGNED BY — DATE
L. KELLER — DRAWN BY — DATE
J. LEM — CHECKED BY — DATE

City of Bellevue
TRANSPORTATION DEPARTMENT

HDR

NE SPRING BLVD - ZONE 1B
90% DESIGN

STRUCTURAL EARTH WALL
LUMINAIRE ANCHORAGE DETAILS

SHEET NAME: WD10

SHT 82 OF 185

90% SUBMITTAL NOT FOR CONSTRUCTION

NOTES:

1. SEE WPN1 FOR ADDITIONAL NOTES.

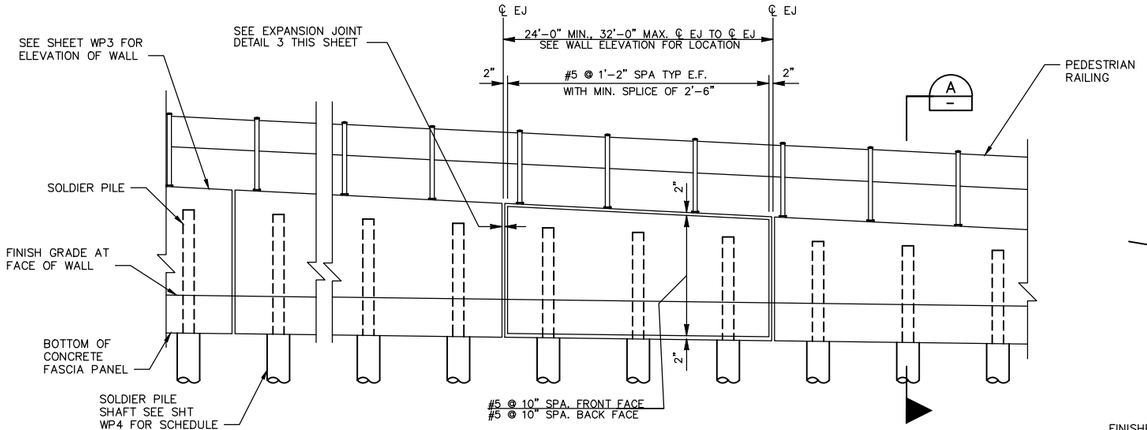

PARTIAL WALL ELEVATION

N.T.S.

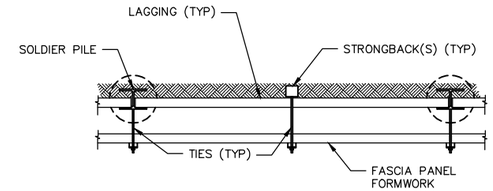

TYPICAL FASCIA PANEL FORMWORK

2

NOT TO SCALE

SEE SPECIFICATIONS FOR FASCIA PANEL FORMING REQUIREMENTS.
STRONGBACK(S) AND TIES SPACED AS REQUIRED FOR FORMING.

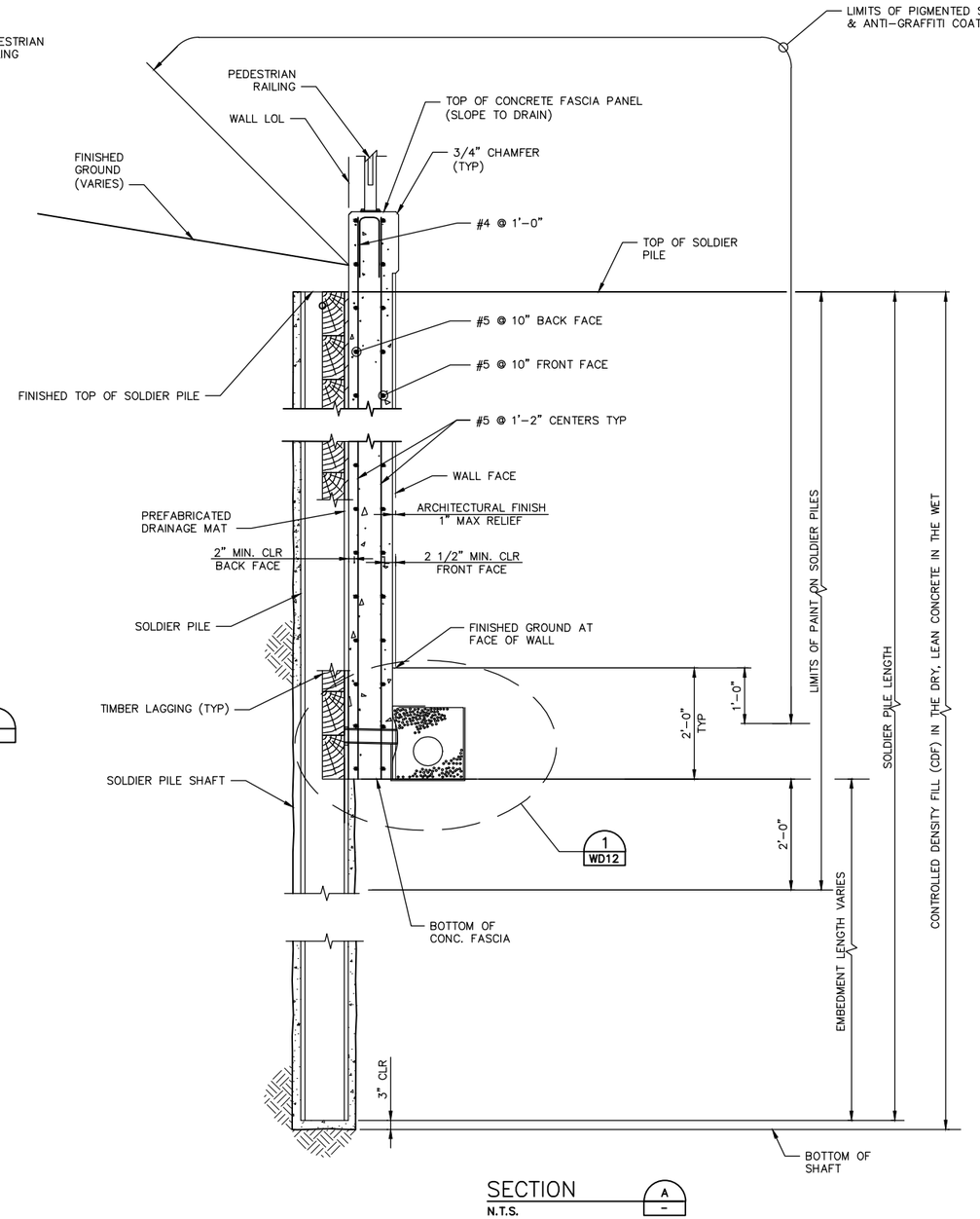

SECTION

A

N.T.S.

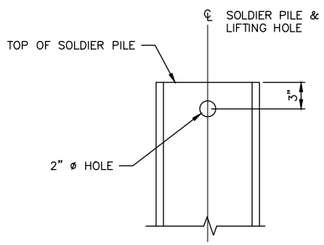

SOLDIER PILE LIFTING HOLE

1

N.T.S.

LIFTING HOLE TO BE DRILLED IN THE SHOP PRIOR TO PAINTING

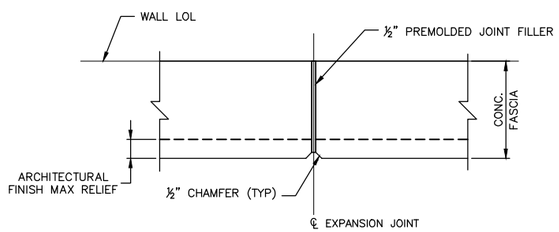

EXPANSION JOINT DETAIL

3

N.T.S.

EXPANSION JOINTS SHALL BE LOCATED AS SHOWN ON WALL ELEVATION

NO.	DATE	BY	APPR.	REVISIONS

Approved By

TRANSPORTATION DESIGN MANAGER — DATE
S. COSTA
PROJECT MANAGER — DATE

J. VO — DESIGNED BY — DATE
L. KELLER — DRAWN BY — DATE
J. LEM — CHECKED BY — DATE

City of Bellevue
TRANSPORTATION DEPARTMENT

HDR

NE SPRING BLVD - ZONE 1B
90% DESIGN

SOLDIER PILE WALL 3
TYPICAL DETAILS 1

SHEET NAME WD11

SHT 83 OF 185

NOTES:

1. SEE SHEET WPN1 FOR ADDITIONAL NOTES.
2. CONNECT SOLDIER PILE WALL UNDER DRAIN TO ADJACENT SE WALL #3 UNDER DRAIN. (SEE NOTE TO REVIEWER)
3. WEEP HOLES LOCATED AT EXPANSION JOINTS MAY BE ADJUSTED 6" TO 1'–0" AWAY FROM THE EXPANSION JOINT, BUT SHALL REMAIN IN THE MIDDLE HALF OF THE PREFABRICATED DRAINAGE MAT.

NOTE TO REVIEWER

FINAL WALL UNDER DRAIN SYSTEM CONNECTION TO BE DETERMINED AND COORDINATED WITH SOUND TRANSIT DESIGN. DRAINAGE MAY CHANGE.

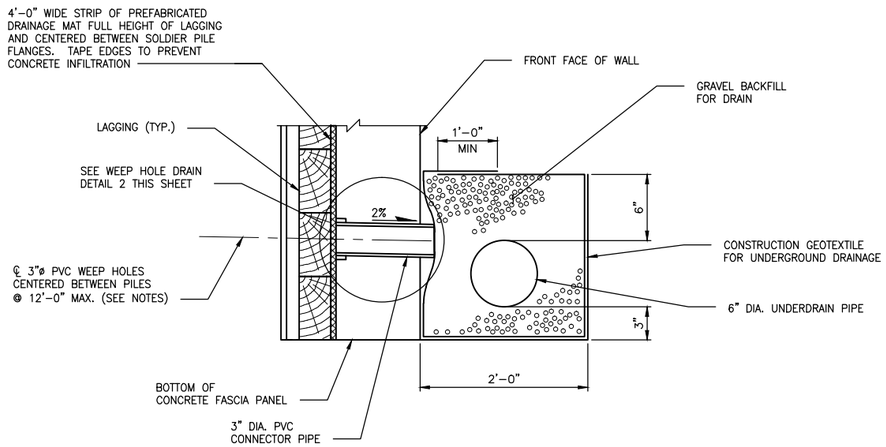

SOLDIER PILE UNDERDRAIN DETAIL (1 / WD11)
NOT TO SCALE

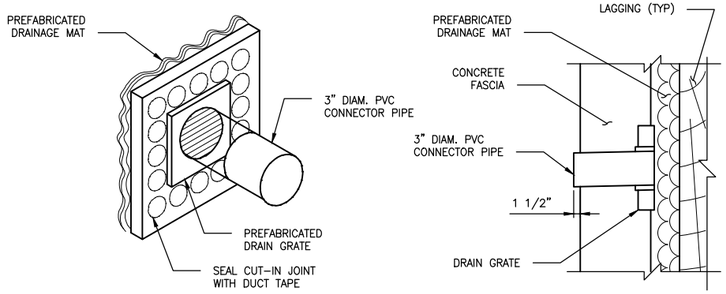

WEEP HOLE DRAIN DETAIL (2 / –)
NOT TO SCALE
DRAIN GRATE INSTALLATION SHALL NOT DISRUPT PREFABRICATED DRAINAGE MAT

NO.	DATE	BY	APPR.	REVISIONS

Approved By

TRANSPORTATION DESIGN MANAGER — DATE
S. COSTA
PROJECT MANAGER — DATE

J. VO — DESIGNED BY — DATE
L. KELLER — DRAWN BY — DATE
J. LEM — CHECKED BY — DATE

City of Bellevue
TRANSPORTATION DEPARTMENT

HDR

NE SPRING BLVD - ZONE 1B
90% DESIGN

SOLDIER PILE WALL 3
DETAILS 2

SHEET NAME **WD12**

NOTES:

1. SEE SHEET WPN1 FOR ADDITIONAL NOTES.
2. PREFABRICATED DRAINAGE MAT SHALL BE 4'–0" WIDE BY FULL LAGGED HEIGHT AND CENTERED BETWEEN SOLDIER PILE FLANGES. SEAL EDGES WITH TAPE TO PREVENT CONCRETE INFILTRATION.
3. CONCRETE FASCIA SHALL BE PIGMENTED SEALED AND ANTI–GRAFFITI COATED TO THE LIMITS SHOWN ON THE PLANS.
4. EXISTING 120TH AVE NE BRIDGE ELEMENTS & LOCATION SHALL BE VERIFIED BY THE CONTRACTOR BEFORE CONSTRUCTION.

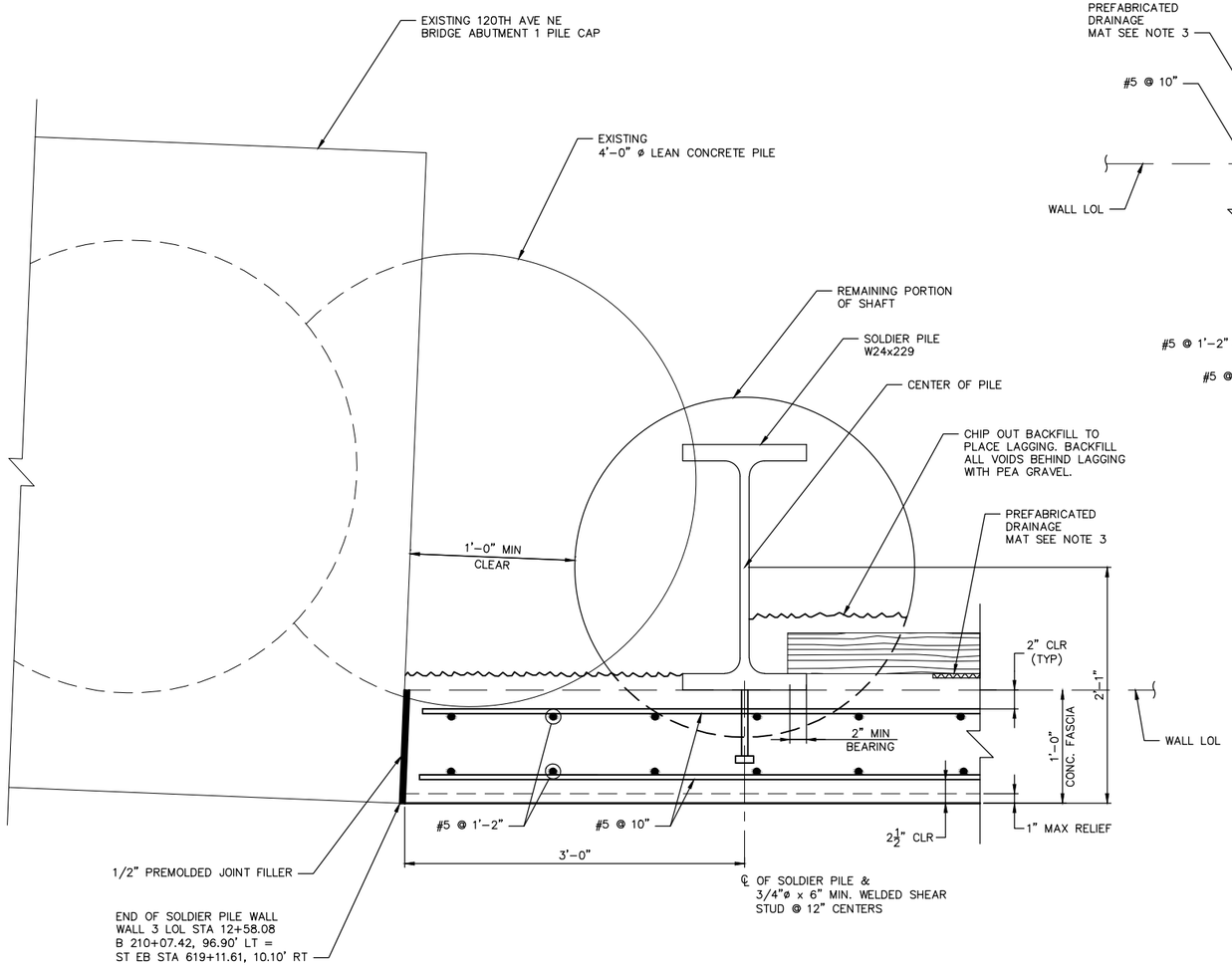

EAST END DETAIL (1)
N.T.S.
(PILE S9)
WP4

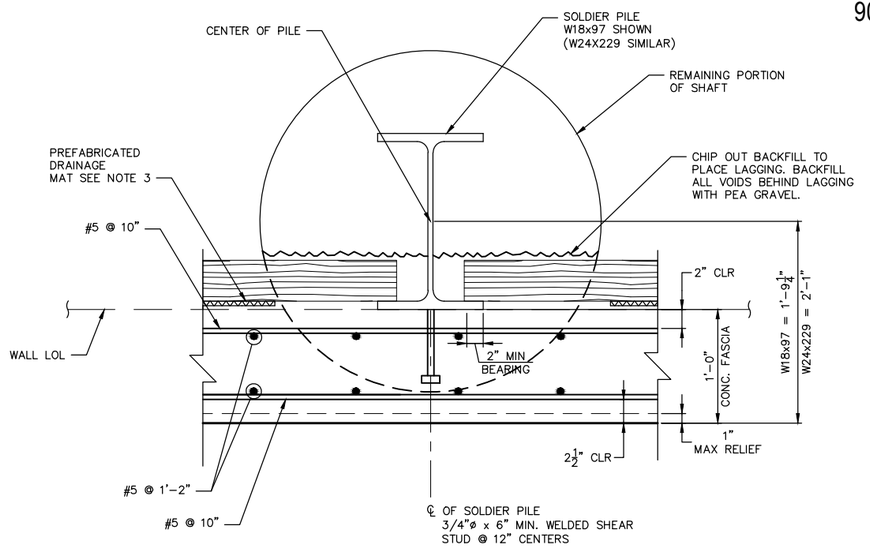

TYPICAL PILE DETAIL (2)
N.T.S.
(PILE S2 THRU S4)
(PILE S5 THRU S8 SIMILAR)
WP4

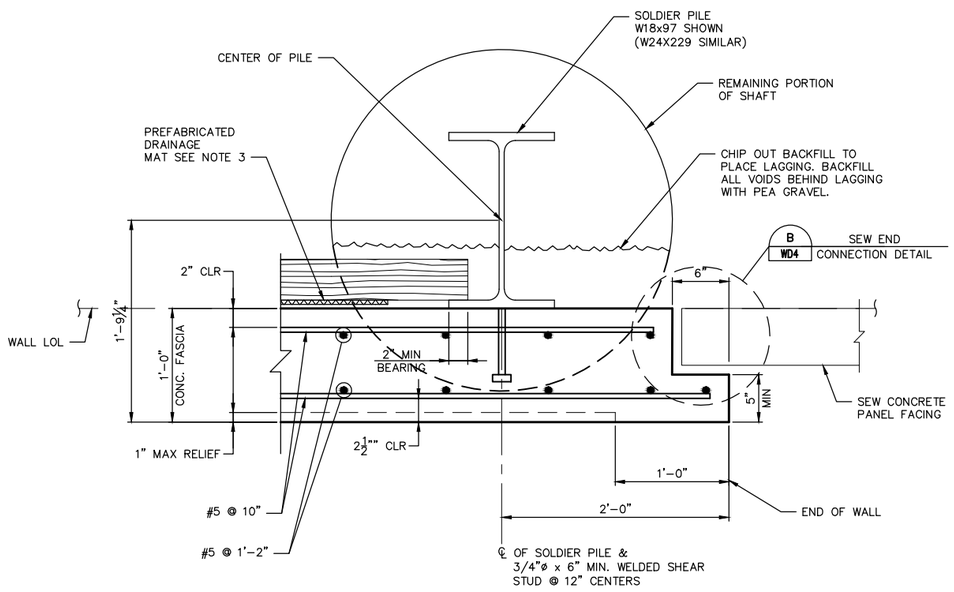

WEST END DETAIL (3)
N.T.S.
(PILE S1)
WP4

RODNEY D. ELLINGSON
STATE OF WASHINGTON
13999
REGISTERED
PROFESSIONAL ENGINEER

NO.	DATE	BY	APPR.	REVISIONS

Approved By

TRANSPORTATION DESIGN MANAGER — DATE
S. COSTA
PROJECT MANAGER — DATE

J. VO — DESIGNED BY — DATE
L. KELLER — DRAWN BY — DATE
J. LEM — CHECKED BY — DATE

City of Bellevue
TRANSPORTATION DEPARTMENT

HDR

NE SPRING BLVD - ZONE 1B
90% DESIGN

SOLDIER PILE WALL 3
DETAILS 3

SHEET NAME **WD13**

SOLDIER PILE WALL 3 – REFLECTED DEVELOPED ELEVATION – FASCIA PATTERN
NTS

NO.	DATE	BY	APPR.	REVISIONS

Approved By

TRANSPORTATION DESIGN MANAGER DATE
S. COSTA
PROJECT MANAGER DATE

J. VO
DESIGNED BY DATE
L. KELLER
DRAWN BY DATE
J. LEM
CHECKED BY DATE

City of Bellevue
TRANSPORTATION DEPARTMENT

HDR

NE SPRING BLVD - ZONE 1B
90% DESIGN

ARCHITECTURAL FASCIA PATTERN
SOLDIER PILE WALL 3 - ELEVATION

SHEET NAME WD14

SHT 86 OF 185

PEDESTRIAN BARRIER – ARCHITECTURAL PATTERN
NTS

STRUCTURAL EARTH WALL – CONCRETE PANEL FACING – ARCHITECTURAL PATTERN
NTS

NO.	DATE	BY	APPR.	REVISIONS

Approved By

TRANSPORTATION DESIGN MANAGER DATE
S. COSTA
PROJECT MANAGER DATE

J. VO
DESIGNED BY DATE
L. KELLER
DRAWN BY DATE
J. LEM
CHECKED BY DATE

City of Bellevue
TRANSPORTATION DEPARTMENT

HDR

NE SPRING BLVD - ZONE 1B
90% DESIGN

ARCHTECTURAL FASCIA PATTERN
DETAILS 1 OF 1

SHEET NAME WD15

SHT 87 OF 185

SECTION 28, T. 25 N., R5E., W.M.
KING COUNTY

90% SUBMITTAL NOT FOR CONSTRUCTION

GENERAL NOTES:

1. UNLESS OTHERWISE NOTED, ALL DIMENSIONS ARE IN FEET.
2. FOR SIGNING DETAILS, SEE ILLUMINATION AND SIGNING PLANS.
3. FOR PAVING DIMENSIONS, SEE PAVING PLANS.
4. PLASTIC PAVEMENT MARKINGS INSTALLED ON PORTLAND CEMENT CONCRETE PAVEMENT SHALL BE TYPE D, METHYL METHACRYLATE, OR APPROVED EQUAL.

CHANNELIZATION NOTES:

(1) INSTALL YELLOW SOLID LANE LINE USING TYPE 1 AND TYPE 2 RPMS PER COB STD. DWG. NO TE-4A AND TE-5.

(4) INSTALL WHITE BROKEN LANE LINE USING TYPE 1 AND TYPE 2 RPMS PER COB STD. DWG. TE-4A AND TE-5.

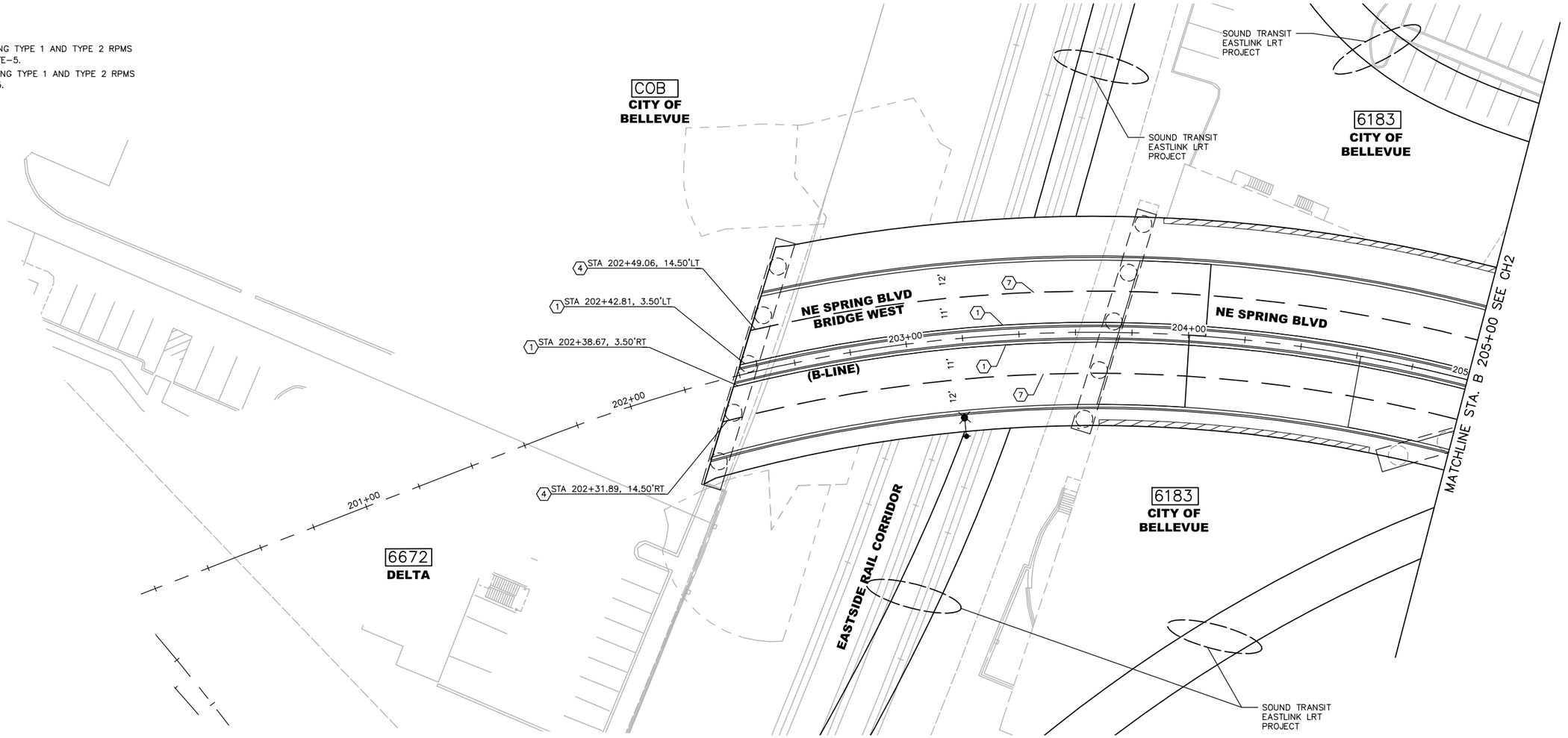

KEY PLAN

20 10 0 20 40
SCALE

PAUL A. FERRER STATE OF WASHINGTON 43172 REGISTERED PROFESSIONAL ENGINEER

NO.	DATE	BY	APPR.	REVISIONS

Approved By

TRANSPORTATION DESIGN MANAGER DATE
S. COSTA
PROJECT MANAGER DATE

P.TEAGUE DESIGNED BY DATE
J. FRYE DRAWN BY DATE
G. ROYCROFT CHECKED BY DATE

City of Bellevue
TRANSPORTATION DEPARTMENT

HDR

NE SPRING BLVD - ZONE 1B
90% DESIGN

CHANNELIZATION PLAN
BEGIN ZONE 1B TO STA. B 205+00

SHEET NAME CH1

SHT 87 OF 184

90% SUBMITTAL NOT FOR CONSTRUCTION

SECTION 28, T. 25 N., R5E., W.M.
KING COUNTY

GENERAL NOTES:

1. UNLESS OTHERWISE NOTED, ALL DIMENSIONS ARE IN FEET.
2. FOR SIGNING DETAILS, SEE ILLUMINATION AND SIGNING PLANS.
3. FOR PAVING DIMENSIONS, SEE PAVING PLANS.
4. PLASTIC PAVEMENT MARKINGS INSTALLED ON PORTLAND CEMENT CONCRETE PAVEMENT SHALL BE TYPE D, METHYL METHACRYLATE, OR APPROVED EQUAL.

CHANNELIZATION NOTES:

(1) INSTALL YELLOW SOLID LANE LINE USING TYPE 1 AND TYPE 2 RPMS PER COB STD. DWG. NO TE-4A AND TE-5.

(2) INSTALL PLASTIC ARROW PER COB STD. DWG. NO TE-6.

(4) INSTALL WHITE BROKEN LANE LINE USING TYPE 1 AND TYPE 2 RPMS PER COB STD. DWG. TE-4A AND TE-5.

(7) INSTALL WHITE 8-IN. WIDE SOLID PAINT LINE LONGITUDINAL MARKINGS AT 15-FT. INTERVALS, ANGLED 45 DEGREES TO THE DIRECTION OF TRAFFIC.

(8) INSTALL WHITE 8-IN. WIDE SOLID PAINT LINE

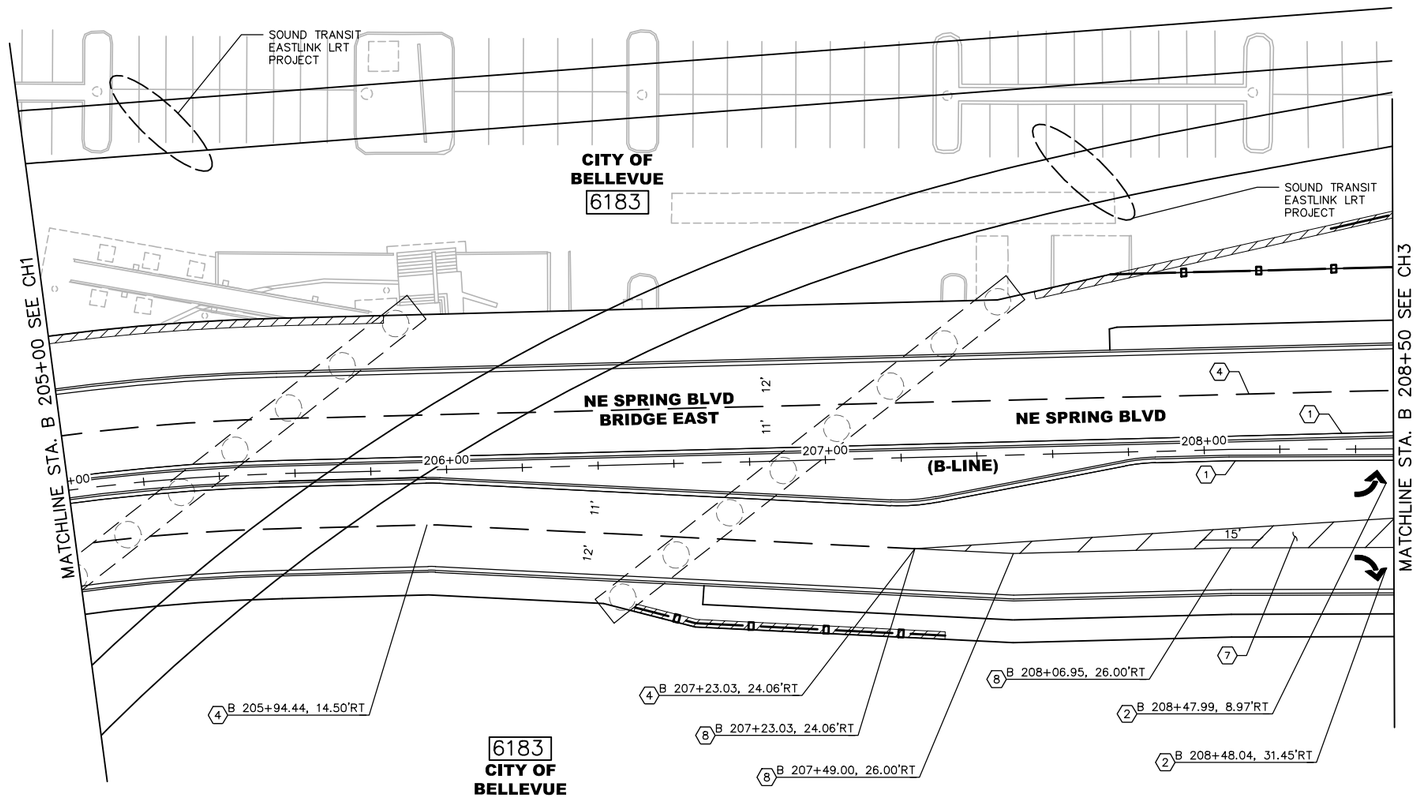

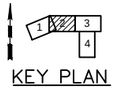

KEY PLAN

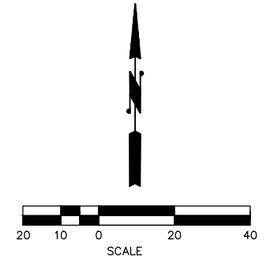

PAUL A. FERRER STATE OF WASHINGTON 43172 REGISTERED PROFESSIONAL ENGINEER

NO.	DATE	BY	APPR.	REVISIONS

Approved By

TRANSPORTATION DESIGN MANAGER S. COSTA DATE

PROJECT MANAGER P.TEAGUE DATE

DESIGNED BY J. FRYE DATE

DRAWN BY G. ROYCROFT DATE

CHECKED BY DATE

City of Bellevue
TRANSPORTATION DEPARTMENT

HDR

NE SPRING BLVD - ZONE 1B
90% DESIGN

CHANNELIZATION PLAN
STA. B 205+00 TO STA. B 208+50

SHEET NAME **CH2**

SHT 88 OF 184

90% SUBMITTAL NOT FOR CONSTRUCTION

SECTION 28, T. 25 N., R5E., W.M.
KING COUNTY

GENERAL NOTES:

1. UNLESS OTHERWISE NOTED, ALL DIMENSIONS ARE IN FEET.
2. FOR SIGNING DETAILS, SEE ILLUMINATION AND SIGNING PLANS.
3. FOR PAVING DIMENSIONS, SEE PAVING PLANS.
4. PLASTIC PAVEMENT MARKINGS INSTALLED ON PORTLAND CEMENT CONCRETE PAVEMENT SHALL BE TYPE D, METHYL METHACRYLATE, OR APPROVED EQUAL.

CHANNELIZATION NOTES:

1. INSTALL YELLOW SOLID LANE LINE USING TYPE 1 AND TYPE 2 RPMS PER COB STD. DWG. NO TE-4A AND TE-5.
2. INSTALL PLASTIC ARROW PER COB STD. DWG. NO TE-6.
3. INSTALL PLASTIC CROSSWALK MARKING PER COB STD. DWG. NO TE-7A AND TE-7B.
4. INSTALL WHITE BROKEN LANE LINE USING TYPE 1 AND TYPE 2 RPMS PER COB STD. DWG. TE-4A AND TE-5.
5. INSTALL DOUBLE YELLOW CENTER LINE USING TYPE 1 AND TYPE 2 RPMS PER COB STD. DWG. TE-4A AND TE-5.
6. INSTALL WHITE WIDE SOLID LINE USING TYPE 1 AND TYPE 2 RPMS PER COB STD. DWG TE-4A AND TE-5.
7. INSTALL WHITE 8-IN. WIDE SOLID PAINT LINE LONGITUDINAL MARKINGS AT 15-FT. INTERVALS, ANGLED 45 DEGREES TO THE DIRECTION OF TRAFFIC.
8. INSTALL WHITE 8-IN. WIDE SOLID PAINT LINE

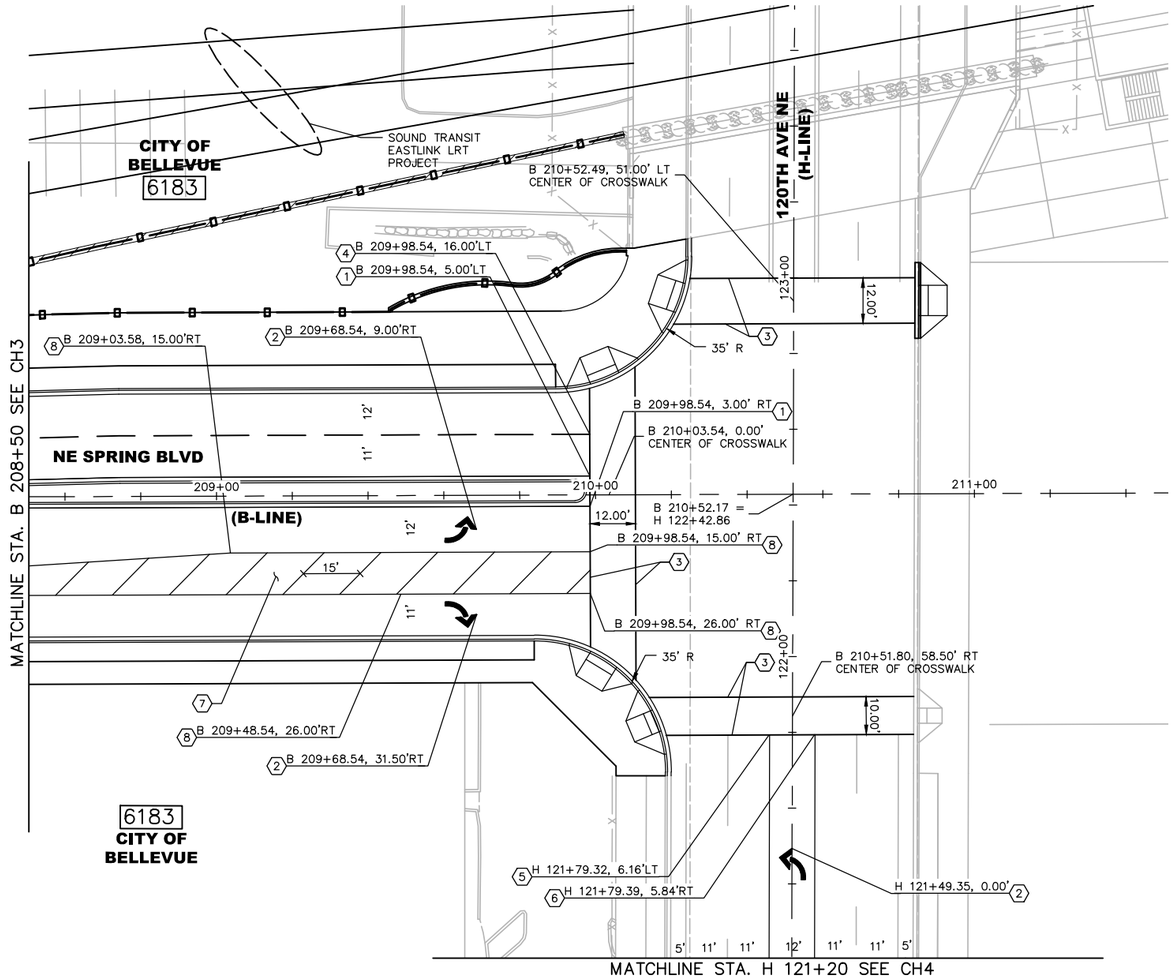

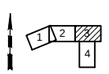

KEY PLAN

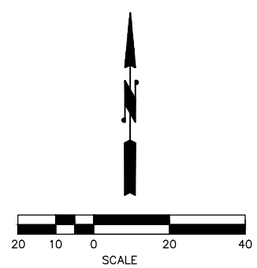

PAUL A. FERRIER STATE OF WASHINGTON 43172 REGISTERED PROFESSIONAL ENGINEER

NO.	DATE	BY	APPR.	REVISIONS

Approved By

TRANSPORTATION DESIGN MANAGER S. COSTA DATE

PROJECT MANAGER DATE

P.TEAGUE DESIGNED BY DATE

J. FRYE DRAWN BY DATE

G. ROYCROFT CHECKED BY DATE

City of Bellevue
TRANSPORTATION DEPARTMENT

HDR

NE SPRING BLVD - ZONE 1B
90% DESIGN

CHANNELIZATION PLAN
STA. B 208+50 TO END ZONE 1B

SHEET NAME **CH3**

SHT 89 OF 184

90% SUBMITTAL NOT FOR CONSTRUCTION

SECTION 28, T. 25 N., R5E., W.M.
KING COUNTY

GENERAL NOTES:

1. UNLESS OTHERWISE NOTED, ALL DIMENSIONS ARE IN FEET.
2. FOR SIGNING DETAILS, SEE ILLUMINATION AND SIGNING PLANS.
3. FOR PAVING DIMENSIONS, SEE PAVING PLANS.
4. PLASTIC PAVEMENT MARKINGS INSTALLED ON PORTLAND CEMENT CONCRETE PAVEMENT SHALL BE TYPE D, METHYL METHACRYLATE, OR APPROVED EQUAL.

CHANNELIZATION NOTES:

(2) INSTALL PLASTIC ARROW PER COB STD. DWG. NO TE-6.

(5) INSTALL YELLOW DOUBLE CENTER LINE USING TYPE 1 AND TYPE 2 RPMS PER COB STD. DWG. TE-4A AND TE-5.

(6) INSTALL WHITE WIDE SOLID LINE USING TYPE 1 AND TYPE 2 RPMS PER COB STD. DWG TE-4A AND TE-5.

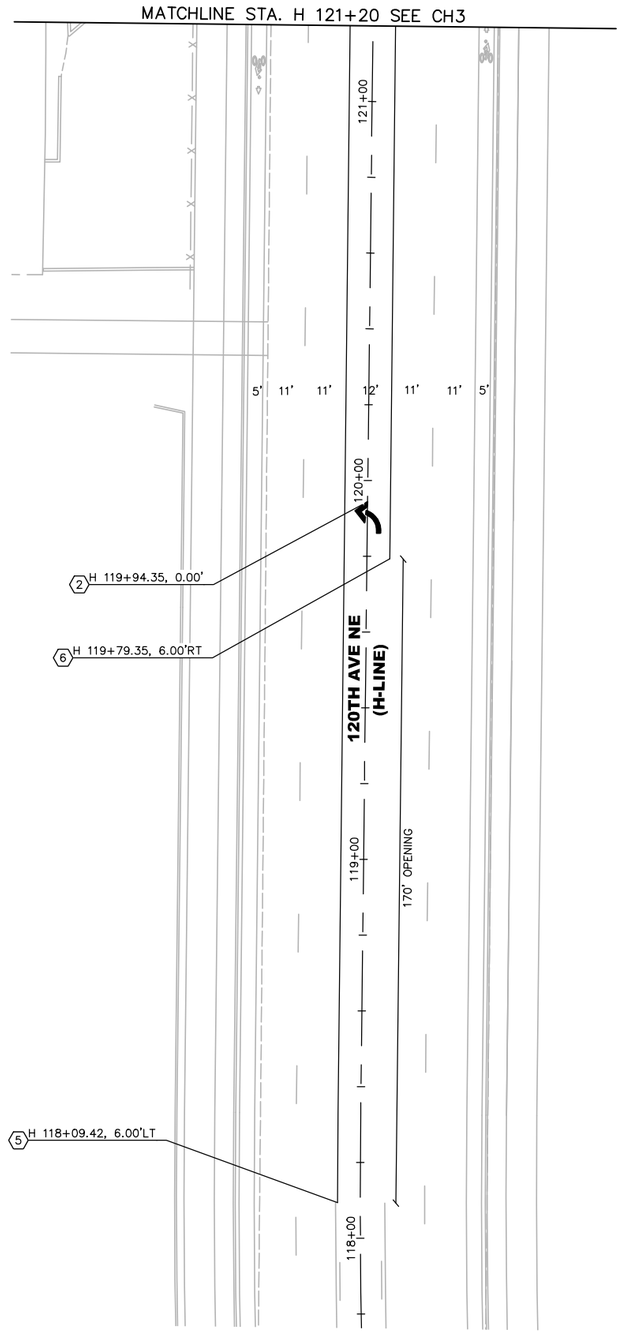

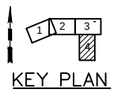

KEY PLAN

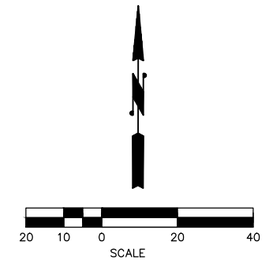

PAUL A. FERRIER STATE OF WASHINGTON 43172 REGISTERED PROFESSIONAL ENGINEER

NO.	DATE	BY	APPR.	REVISIONS

Approved By

TRANSPORTATION DESIGN MANAGER S. COSTA DATE

PROJECT MANAGER DATE

P.TEAGUE DESIGNED BY DATE

J. FRYE DRAWN BY DATE

G. ROYCROFT CHECKED BY DATE

City of Bellevue
TRANSPORTATION DEPARTMENT

HDR

NE SPRING BLVD - ZONE 1B
90% DESIGN

CHANNELIZATION PLAN
STA. H 121+20 TO END

SHEET NAME **CH4**

SHT 90 OF 184

GENERAL NOTES:

1. ALL DIMENSIONS ARE IN FEET UNLESS OTHERWISE NOTED.
2. SEE SHEETS LG1 AND LG2 FOR ADDITIONAL LEGENDS AND ABBREVIATIONS.
3. ALL SIGNS AND SPACING SHALL CONFORM TO THE 2009 MANUAL ON UNIFORM TRAFFIC CONTROL DEVICES (MUTCD).
4. ALL SIGNS INSTALLED SHALL BE 7 FEET FROM THE FINISHED GRADE TO THE BOTTOM OF THE SIGN EXCEPT AS NOTED IN THE SIGN SCHEDULE.
5. FOR SIGN INSTALLATION DETAILS, SEE CITY OF BELLEVUE STANDARD DRAWINGS TE-21A.
6. ALL REMOVED SIGNS SHALL REMAIN THE PROPERTY OF THE CITY OF BELLEVUE, UNLESS NOTED TO BE REMOVED BY OTHERS.
7. ALL PROPOSED CONDUIT SHALL BE SCHEDULE 40 PVC, UNLESS NOTED OTHERWISE.
8. LIGHT POLES SHALL BE BLACK IN COLOR.

LEGEND:

	PROPOSED	EXISTING
TYPE I JUNCTION BOX	⊠	⊠
TYPE II JUNCTION BOX	◪	◪
TYPE III JUNCTION BOX	◨	◫
SERVICE CABINET	⊠	⊠
CONTROLLER CABINET	⧓	
STREET LIGHT ASSEMBLY	●—✳	○—✳
STREET SIGN	⚑	
SIGN NOTE	S#	N/A
WIRE NOTE	#	N/A
LUMINAIRE/ELECTRICAL OUTLET NOTE	#	N/A
CONSTRUCTION NOTE	#	N/A
CONDUIT	- — — —	

LUMINAIRE SCHEDULE

COB POLE NO.	LUM. NO. ⬡	SERVICE CABINET #	CIRCUIT NO.	STATION (OFFSET)	TYPE-DISTRIBUTION-WATT	POLE HEIGHT	POLE TYPE	ARM LENGTH (FT)	COMMENTS
	L1	1	1	203+18, 33.8' RT	LEOTEK GC2 F-III-90W	35	CONC / BLACK	6	INSTALL DUPLEX OUTLETS AND PROVIDE BANNER BRACKETS
	L2	1	1	204+87, 41.8' LT	LEOTEK GC2 F-III-90W	35	CONC / BLACK	6	INSTALL DUPLEX OUTLETS AND PROVIDE BANNER BRACKETS
	L3	1	1	206+14, 41.8' LT	LEOTEK GC2 F-III-90W	35	CONC / BLACK	6	INSTALL DUPLEX OUTLETS AND PROVIDE BANNER BRACKETS
	L4	1	1	205+90, 32' LT	LEOTEK GC2 F-III-90W	35	CONC / BLACK	6	INSTALL DUPLEX OUTLETS AND PROVIDE BANNER BRACKETS
	L5	1	1	207+05, 39' RT	LEOTEK GC2 F-III-90W	35	CONC / BLACK	6	INSTALL DUPLEX OUTLETS AND PROVIDE BANNER BRACKETS
	⬡1	1	2	SEE SHT. TS1	LEOTEK GC2 F-III-80W	35	SEE SHT. TS3	6	
	⬡3	1	2	SEE SHT. TS1	LEOTEK GC2 F-III-80W	35	SEE SHT. TS3	6	
	⬡5	1	2	SEE SHT. TS1	LEOTEK GC2 F-III-80W	35	SEE SHT. TS3	6	
	⬡7	1	2	SEE SHT. TS1	LEOTEK GC2 F-III-80W	35	SEE SHT. TS3	6	

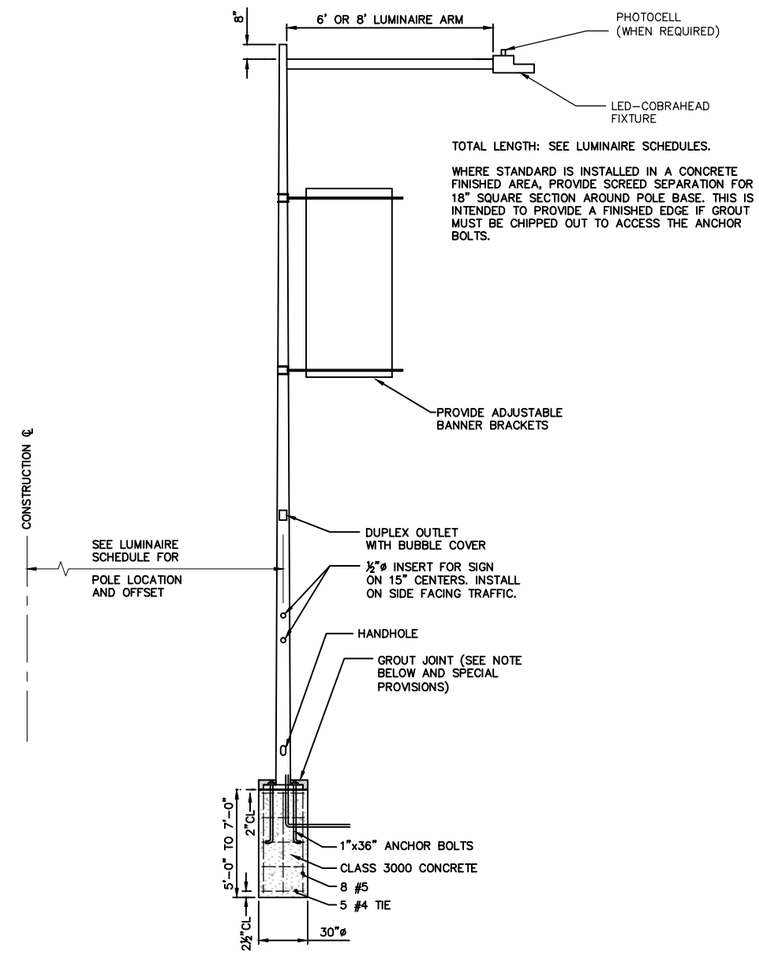

NOTE:
WHEN FOUNDATION IS IN SIDEWALK AREA TOP 6" SHALL CONSIST OF 4" SAND UNDER 2" GROUT. WHEN FOUNDATION IS IN PLANTING STRIP TOP 6" SHALL BE TOPSOIL.

CONCRETE LUMINAIRE POLE DETAIL (A)
N.T.S.

MARYANN BREILING OLSON — STATE OF WASHINGTON — 36307 — REGISTERED PROFESSIONAL ENGINEER

NO.	DATE	BY	APPR.	REVISIONS

Approved By

TRANSPORTATION DESIGN MANAGER — DATE
S. COSTA
PROJECT MANAGER — DATE

M. OLSON — DESIGNED BY — DATE
J. BUCHANAN — DRAWN BY — DATE
N. CHING — CHECKED BY — DATE

City of Bellevue
TRANSPORTATION DEPARTMENT

HDR

NE SPRING BLVD - ZONE 1B
90% DESIGN

ILLUMINATION AND SIGNING
LEGEND / NOTES

SHEET NAME ILG1

SHT X OF X

90% SUBMITTAL NOT FOR CONSTRUCTION

SECTION 28, T. 25 N., R5E., W.M.
KING COUNTY

ILLUMINATION WIRE SCHEDULE		
RUN #	CONDUCTORS	CONDUIT SIZE (IN)
1	2–#8 (ILL.), 2–#8 (REC.), 1–#8 (GROUND)	2
2	4–#8 (ILL.), 2–#8 (REC.), 1–#8 (GROUND)	2
3	4–#8 (ILLUM.), 2–#8 (REC.), 1–#8 (GROUND)	3
	SPARE	3
4	6–#8 (ILL.), 2–#8 (REC.), 1–#8 (GROUND)	3
	SPARE	3
5	2–#8 (ILLUM.), 2–#8 (REC.), 1–#8 (GROUND)	3
	SPARE	3
6	INTERCONNECT (12–SMFO)	3
	SPARE	3
7	2–#8 (ILLUM.), 2–#8 (REC.), 1–#8 (GROUND)	3" RGS
8	INTERCONNECT (12–SMFO)	3" RGS
	SPARE	3" RGS
9	2–#8 (IRR PWR)	2
10	SPARE	3" RGS

ILLUMINATION CONSTRUCTION NOTES:

1. CONSTRUCT FOUNDATION AND INSTALL 35–FT ROADWAY LIGHT STANDARD WITH LED LUMINAIRE FIXTURE AT 35–FT MOUNTING HEIGHT PER COB STD. DWG. TSSL–2 AND TSSL–3.
2. INSTALL DEFLECTION FITTING TYPE A PER DETAILS ON SHEET BRW32.
3. INTERCEPT EXISTING CONDUIT AND REPULL CONDUCTORS FROM NEAREST EXISTING JUNCTION BOX TO NEW TYPE 8 JUNCTION.
4. PROTECT EXISTING POLE TO REMAIN.
5. PROTECT EXISTING SIGNAL POLE AND REPLACE HPS FIXTURE WITH LED FIXTURE. SEE LUMINAIRE SCHEDULE FOR DETAILS.
6. REMOVE EXISTING LUMINAIRE POLE AND FIXTURE. REMOVE FOUNDATION TO TWO FEET BELOW GRADE. BACKFILL TO GRADE.
7. REFER TO SHEET BRE32 FOR NEMA J–BOX INSTALLATION IN BRIDGE BARRIER.
8. INTERCEPT INTERCONNECT AT EXISTING JUNCTION AND EXTEND TO CONTROLLER CABINET.
9. INSTALL 35–FT ROADWAY LIGHT STANDARD WITH LED LUMINAIRE FIXTURE AT 35–FT MOUNTING HEIGHT PER COB STD. DWG. TSSL–2 AND TSSL–3. BRIDGE–MOUNTED POLE SHALL HAVE BLISTER–MOUNT. SEE STRUCTURAL PLANS FOR DETAILS.

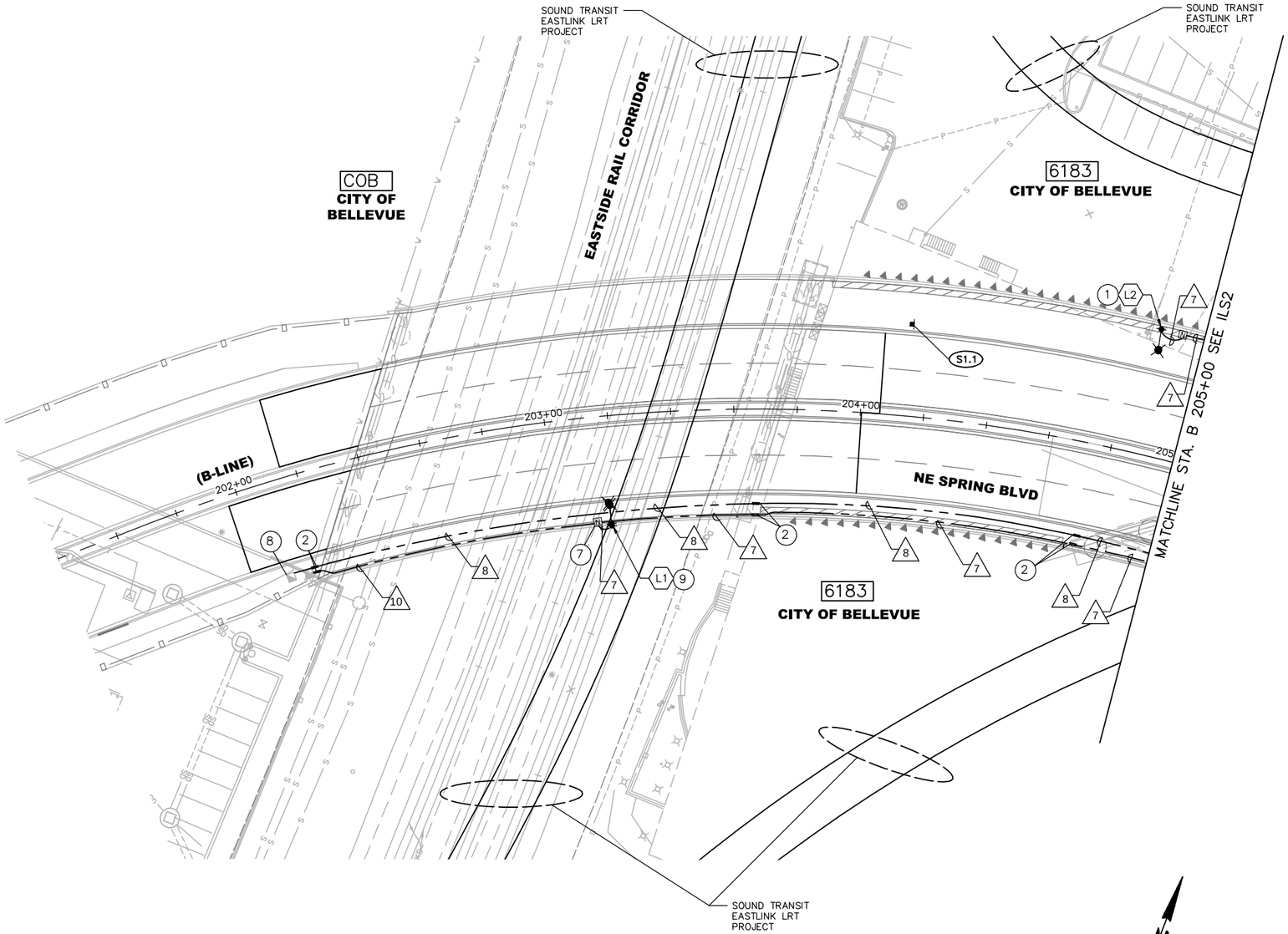

SIGN SCHEDULE: (X)

SIGN NO.	STATION/OFFSET	NEW/EX	DESIGNATION	X	Y	COLOR	DESCRIPTION	REMARKS
S1.1	204+14.0, 29.0'LT	NEW	R2–1	30"	36"	WHITE	SPEED LIMIT 30	INSTALL NEW SIGN ON STEEL POST

KEY PLAN

SCALE: 20 10 0 20 40

MARYANN BREILING OLSON — STATE OF WASHINGTON — 36202 — REGISTERED PROFESSIONAL ENGINEER

NO.	DATE	BY	APPR.	REVISIONS

Approved By

TRANSPORTATION DESIGN MANAGER — DATE
S. COSTA
PROJECT MANAGER — DATE

M. OLSON — DESIGNED BY — DATE
J. BUCHANAN — DRAWN BY — DATE
N. CHING — CHECKED BY — DATE

City of Bellevue
TRANSPORTATION DEPARTMENT

HDR

NE SPRING BLVD - ZONE 1B
90% DESIGN

ILLUMINATION & SIGNING PLAN
BEGIN ZONE 1B TO STA. 205+00

SHEET NAME: ILS1

SHT X OF X

SECTION 28, T. 25 N., R5E., W.M.
KING COUNTY

90% SUBMITTAL NOT FOR CONSTRUCTION

ILLUMINATION CONSTRUCTION NOTES:

1. CONSTRUCT FOUNDATION AND INSTALL 35-FT ROADWAY LIGHT STANDARD WITH LED LUMINAIRE FIXTURE AT 35-FT MOUNTING HEIGHT PER COB STD. DWG. TSSL-2 AND TSSL-3.
2. INSTALL DEFLECTION FITTING TYPE A PER DETAILS ON SHEET BRW32.
3. INTERCEPT EXISTING CONDUIT AND REPULL CONDUCTORS FROM NEAREST EXISTING JUNCTION BOX TO NEW TYPE 8 JUNCTION.
4. PROTECT EXISTING POLE TO REMAIN.
5. PROTECT EXISTING SIGNAL POLE AND REPLACE HPS FIXTURE WITH LED FIXTURE. SEE LUMINAIRE SCHEDULE FOR DETAILS.
6. REMOVE EXISTING LUMINAIRE POLE AND FIXTURE. REMOVE FOUNDATION TO TWO FEET BELOW GRADE. BACKFILL TO GRADE.
7. REFER TO SHEET BRE32 FOR NEMA J-BOX INSTALLATION IN BRIDGE BARRIER.
8. INTERCEPT INTERCONNECT AT EXISTING JUNCTION AND EXTEND TO CONTROLLER CABINET.
9. INSTALL 35-FT ROADWAY LIGHT STANDARD WITH LED LUMINAIRE FIXTURE AT 35-FT MOUNTING HEIGHT PER COB STD. DWG. TSSL-2 AND TSSL-3. BRIDGE-MOUNTED POLE SHALL HAVE BLISTER BASE. SEE STRUCTURAL PLANS FOR DETAILS.

ILLUMINATION WIRE SCHEDULE

RUN #	CONDUCTORS	CONDUIT SIZE (IN)
1	2-#8 (ILL.), 2-#8 (REC.), 1-#8 (GROUND)	2
2	4-#8 (ILL.), 2-#8 (REC.), 1-#8 (GROUND)	2
3	4-#8 (ILLUM.), 2-#8 (REC.), 1-#8 (GROUND)	3
	SPARE	3
4	6-#8 (ILL.), 2-#8 (REC.), 1-#8 (GROUND)	3
	SPARE	3
5	2-#8 (ILLUM.), 2-#8 (REC.), 1-#8 (GROUND)	3
	SPARE	3
6	INTERCONNECT (12-SMFO)	3
	SPARE	3
7	2-#8 (ILLUM.), 2-#8 (REC.), 1-#8 (GROUND)	3" RGS
8	INTERCONNECT (12-SMFO)	3" RGS
	SPARE	3" RGS
9	2-#8 (IRR PWR)	2
10	SPARE	3" RGS

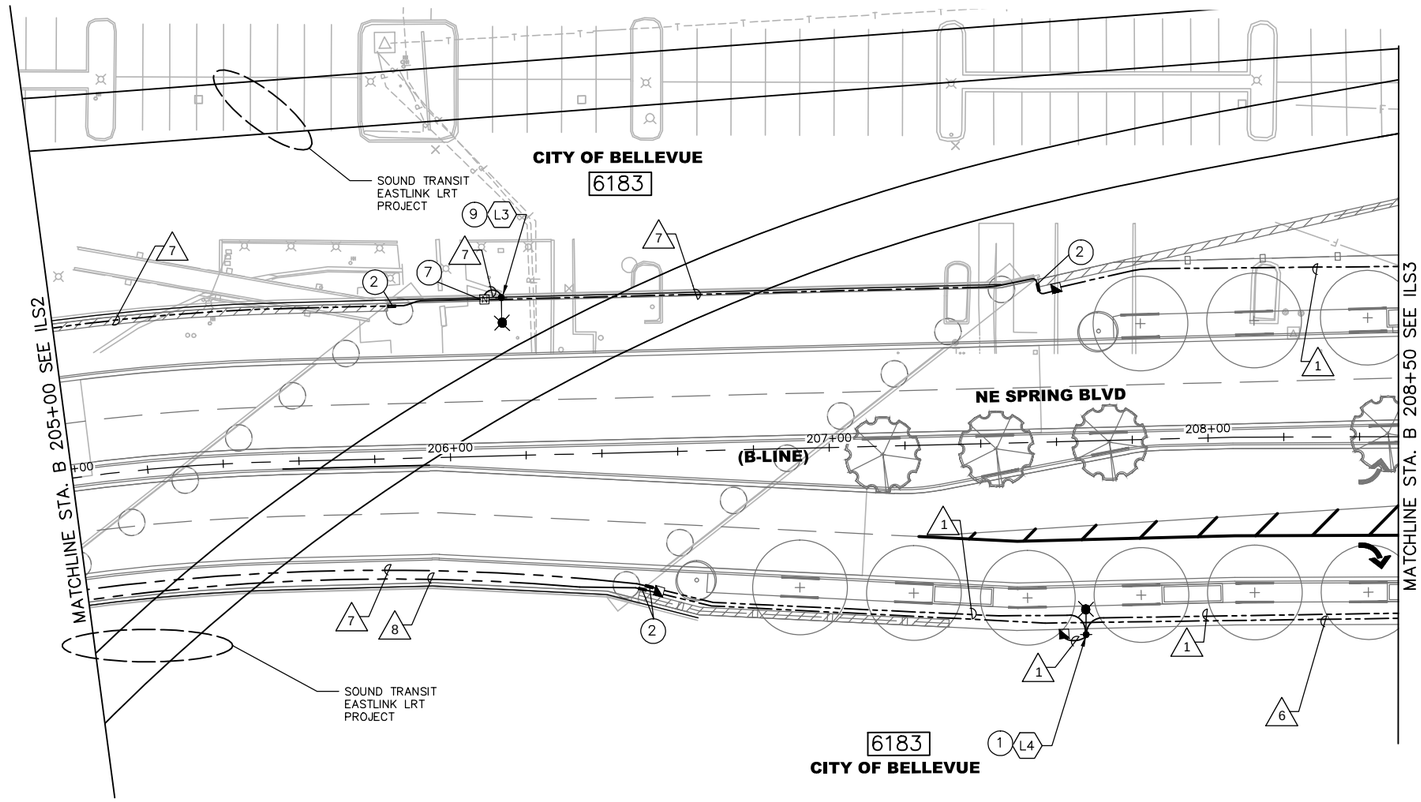

KEY PLAN

SCALE: 20 10 0 20 40

MARYANN BREILING OLSON STATE OF WASHINGTON 36307 REGISTERED PROFESSIONAL ENGINEER

NO.	DATE	BY	APPR.	REVISIONS

Approved By

TRANSPORTATION DESIGN MANAGER S. COSTA DATE

PROJECT MANAGER DATE

M. OLSON DESIGNED BY DATE

J. BUCHANAN DRAWN BY DATE

N. CHING CHECKED BY DATE

City of Bellevue
TRANSPORTATION DEPARTMENT

HDR

NE SPRING BLVD - ZONE 1B
90% DESIGN

ILLUMINATION & SIGNING PLAN
STA. B 205+00 TO STA. B 208+50

SHEET NAME **ILS2**

SHT X OF X

SECTION 28, T. 25 N., R5E., W.M.
KING COUNTY

90% SUBMITTAL NOT FOR CONSTRUCTION

ILLUMINATION CONSTRUCTION NOTES:

1. CONSTRUCT FOUNDATION AND INSTALL 35–FT ROADWAY LIGHT STANDARD WITH LED LUMINAIRE FIXTURE AT 35–FT MOUNTING HEIGHT PER COB STD. DWG. TSSL–2 AND TSSL–3.
2. INSTALL DEFLECTION FITTING PER DETAILS ON SHEET BRE32.
3. INTERCEPT EXISTING CONDUIT AND REPULL CONDUCTORS FROM NEAREST EXISTING JUNCTION BOX TO NEW TYPE 8 JUNCTION.
4. PROTECT EXISTING POLE TO REMAIN.
5. PROTECT EXISTING SIGNAL POLE AND REPLACE HPS FIXTURE WITH LED FIXTURE. SEE LUMINAIRE SCHEDULE FOR DETAILS.
6. REMOVE EXISTING LUMINAIRE POLE AND FIXTURE. REMOVE FOUNDATION TO TWO FEET BELOW GRADE. BACKFILL TO GRADE.
7. REFER TO SHEET BRE32 FOR NEMA J–BOX INSTALLATION IN BRIDGE BARRIER.
8. REFER TO SHEET TS1 FOR INTERCONNECT CONTINUATION AT INTERSECTION.

ILLUMINATION WIRE SCHEDULE

RUN #	CONDUCTORS	CONDUIT SIZE (IN)
1	2–#8 (ILL.), 2–#8 (REC.), 1–#8 (GROUND)	2
2	4–#8 (ILL.), 2–#8 (REC.), 1–#8 (GROUND)	2
3	4–#8 (ILLUM.), 2–#8 (REC.), 1–#8 (GROUND)	3
	SPARE	3
4	6–#8 (ILL.), 2–#8 (REC.), 1–#8 (GROUND)	3
	SPARE	3
5	2–#8 (ILLUM.), 2–#8 (REC.), 1–#8 (GROUND)	3
	SPARE	3
6	INTERCONNECT (12–SMFO)	3
	SPARE	3
7	2–#8 (ILLUM.), 2–#8 (REC.), 1–#8 (GROUND)	3" RGS
8	INTERCONNECT (12–SMFO)	3" RGS
	SPARE	3" RGS
9	2–#8 (IRR PWR)	2
10	SPARE	3" RGS
11	2–#8 (ILL.), 1–#8 (GROUND)	2

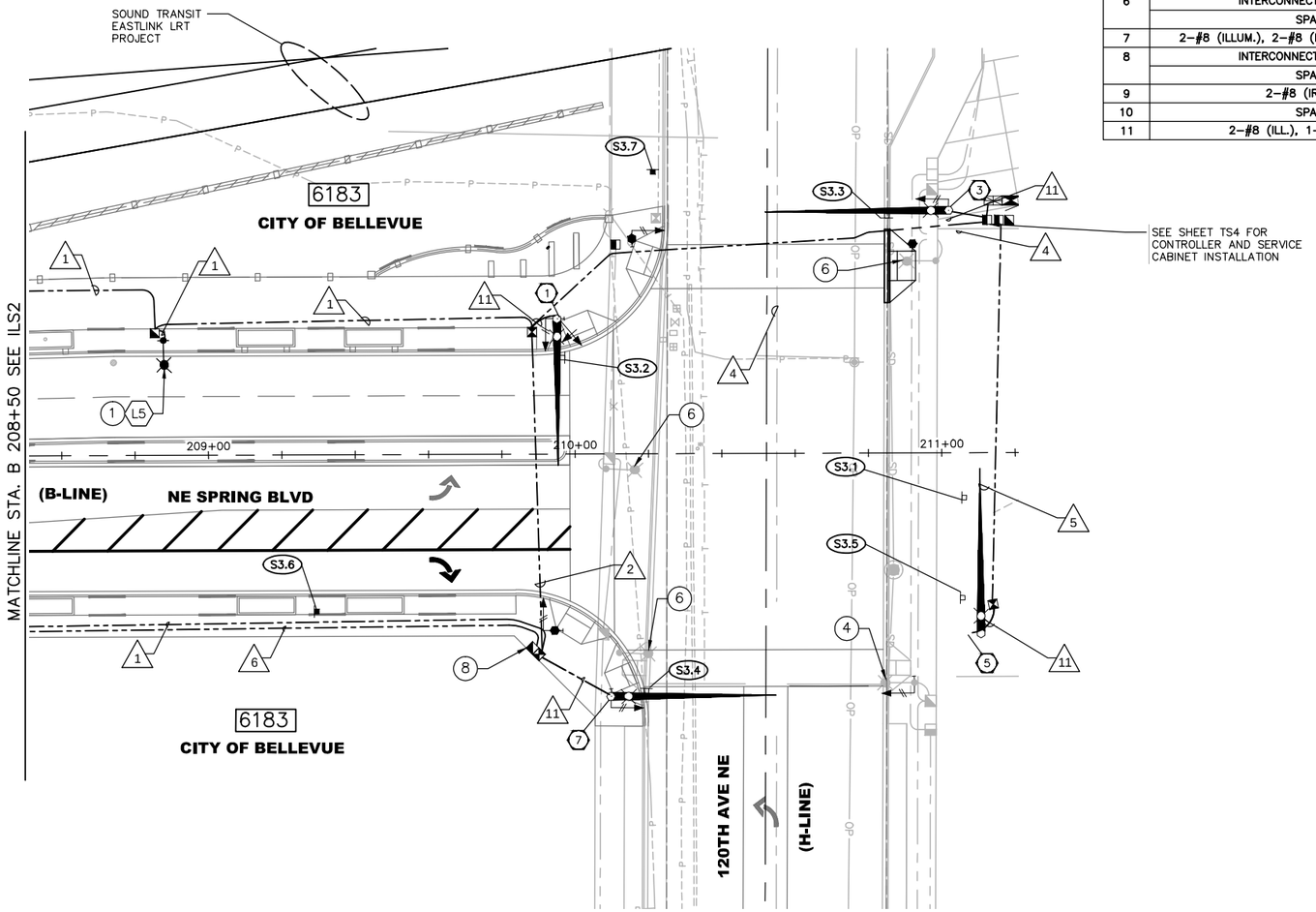

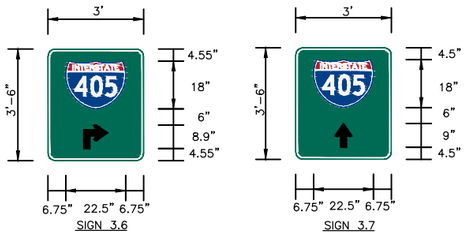

SIGN DETAILS

SIGN SCHEDULE: (X)

SIGN NO.	STATION/OFFSET	NEW/EX	DESIGNATION	X	Y	COLOR	DESCRIPTION	REMARKS
S3.1	209+94, LT	NEW	R3–4	36"	36"	WHITE	U–TURN PROHIBITION	INSTALL NEW SIGN ON PROPOSED MASTARM
S3.2	210+07, LT	NEW	D3–1	102"	18"	GREEN	120TH AVE NE	INSTALL NEW SIGN ON PROPOSED MAST ARM
S3.3	210+82, LT	NEW	D3–1	115"	22"	GREEN	NE SPRING BLVD	INSTALL NEW SIGN ON PROPOSED MAST ARM
S3.4	B 210+20 (RT)	NEW	D3–1	115"	22"	GREEN	NE SPRING BLVD	INSTALL NEW SIGN ON PROPOSED MAST ARM
S3.5	210+99, RT	NEW	D3–1	102"	18"	GREEN	120TH AVE NE	INSTALL NEW SIGN ON PROPOSED MAST ARM
S3.6	121+81, LT	NEW	MOD	24"	48"	GREEN	TO I–405 (RIGHT ARROW)	INSTALL NEW SIGN ON LIGHT POLE. SEE DETAIL THIS SHEET.
S3.7	122+17, LT	NEW	MOD	24"	48"	GREEN	TO I–405 (THRU ARROW)	INSTALL NEW SIGN ON STEEL POST. SEE DETAIL THIS SHEET.

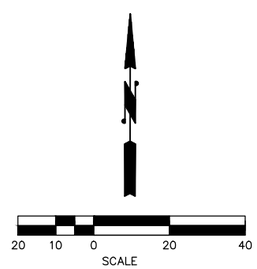

NO.	DATE	BY	APPR.	REVISIONS

Approved By

TRANSPORTATION DESIGN MANAGER — DATE
S. COSTA / R. LOGWOOD
PROJECT MANAGER — DATE

M. OLSON — DESIGNED BY — DATE
J. BUCHANAN — DRAWN BY — DATE
N. CHING — CHECKED BY — DATE

City of Bellevue
TRANSPORTATION DEPARTMENT

HDR

NE SPRING BLVD - ZONE 1B
90% DESIGN

ILLUMINATION & SIGNING PLAN
STA. B 208+50 TO END ZONE 1B

SHEET NAME **ILS3**

SHT X OF X

SECTION 28, T. 25 N., R5E., W.M.
KING COUNTY

90% SUBMITTAL NOT FOR CONSTRUCTION

GENERAL NOTES:

1. SEE SHEETS LG1 AND LG2 FOR LEGEND AND ABBREVIATIONS.
2. SEE SHEETS ILS1–ILS3 FOR ILLUMINATION, ITS, AND SIGNING PLANS.
3. ALL WORK SHALL BE PERFORMED IN ACCORDANCE WITH WSDOT STANDARD PLANS AND SPECIFICATIONS, AND AS AMENDED BY CITY OF BELLEVUE STANDARDS, EXCEPT AS MODIFIED BY CONTRACT PLANS AND PROVISIONS.
4. UTILITY LOCATIONS ARE APPROXIMATE AND SHALL BE VERIFIED IN THE FIELD BY THE CONTRACTOR PRIOR TO ANY SIGNAL WORK. CONFLICTS SHALL BE IMMEDIATELY BROUGHT TO THE ATTENTION OF THE ENGINEER FOR RESOLUTION.
5. ALL PROPOSED CONDUIT SHALL BE SCHEDULE 40 PVC UNLESS NOTED OTHERWISE.
6. COORDINATE WITH PUGET SOUND ENERGY (PSE) FOR POWER HOOK–UP OF SERVICE CABINETS.
7. CALL UTILITIES UNDERGROUND LOCATION CENTER AT 1–800–424–5555 48 HOURS PRIOR TO CONSTRUCTION.
8. ALL POLE PENETRATIONS SHALL BE MADE IN THE FIELD.
9. OPTICOM SENSORS SHALL BE MOUNTED HIGHER THAN STREET NAME SIGNS.
10. POLE LOCATIONS SHALL BE STAKED IN THE FIELD BY THE ENGINEER PRIOR TO CONSTRUCTION.
11. THE LOCATIONS OF CONDUITS AND JUNCTION BOXES SHOWN IN THE PLANS ARE FOR GRAPHIC REPRESENTATION ONLY. EXACT LOCATIONS WILL BE DETERMINED IN THE FIELD.
12. ALL SIGNAL POLE SHALL BE INSTALLED A MINIMUM OF 3 FEET FROM THE FACE OF CURB.
13. TUNNEL VISORS AND BACKPLATES SHALL BE USED FOR ALL VEHICLE HEADS.
14. ALL POLES, TERMINAL CABINETS, VIDEO TERMINAL CABINETS, SIGNAL HEADS PEDESTRIAN HEADS, CAMERAS, LUMINAIRES, AND MOUNTING SHALL BE POWDER COATED BLACK.
15. EMERGENCY PREEMPTION DETECTORS SHALL BE CITY–PROVIDED GPS OPTICOM.

WIRING SCHEDULE

RUN #	PVC CONDUIT SIZE (IN)	LOOP DETECTION 2CSH	GPS OPTICOM	SIGNAL HEAD 5C	COUNTDOWN PED. HEAD 5C	APS PUSH BUTTON 2CSH	POWER #2	INTERCONNECT (12–SMFO)	REMARKS
1	2	3							
2	2	6							
3	2				1	1			
4	2		1	2					
5	3	6	1	2	1	1			
	3								SPARE
6	3	6		2	3	3			
	3							1	
7	3	5EX,6				4			
	3			2	4				
	3								SPARE
	3							1	
8	3	6	1	5	2	2			
	3							1	
9	2					1			
10	2			3	1				
11	2						3		
12	2			1	1	1			
13	3	6		1	2	2			
	3								SPARE
	3							1	
14	2			1	1	1			
15	2	6							
16	2	5EX							

1. ALL CONDUITS CONTAINING CONDUCTORS SHALL INCLUDE GROUND WIRE. GROUND WIRE SIZE SHALL MATCH THE LARGEST CONDUCTOR (MIN #8 UNLESS OTHERWISE NOTED).
2. ALL EMPTY/SPARE CONDUITS SHALL CONTAIN MULE TAPE.

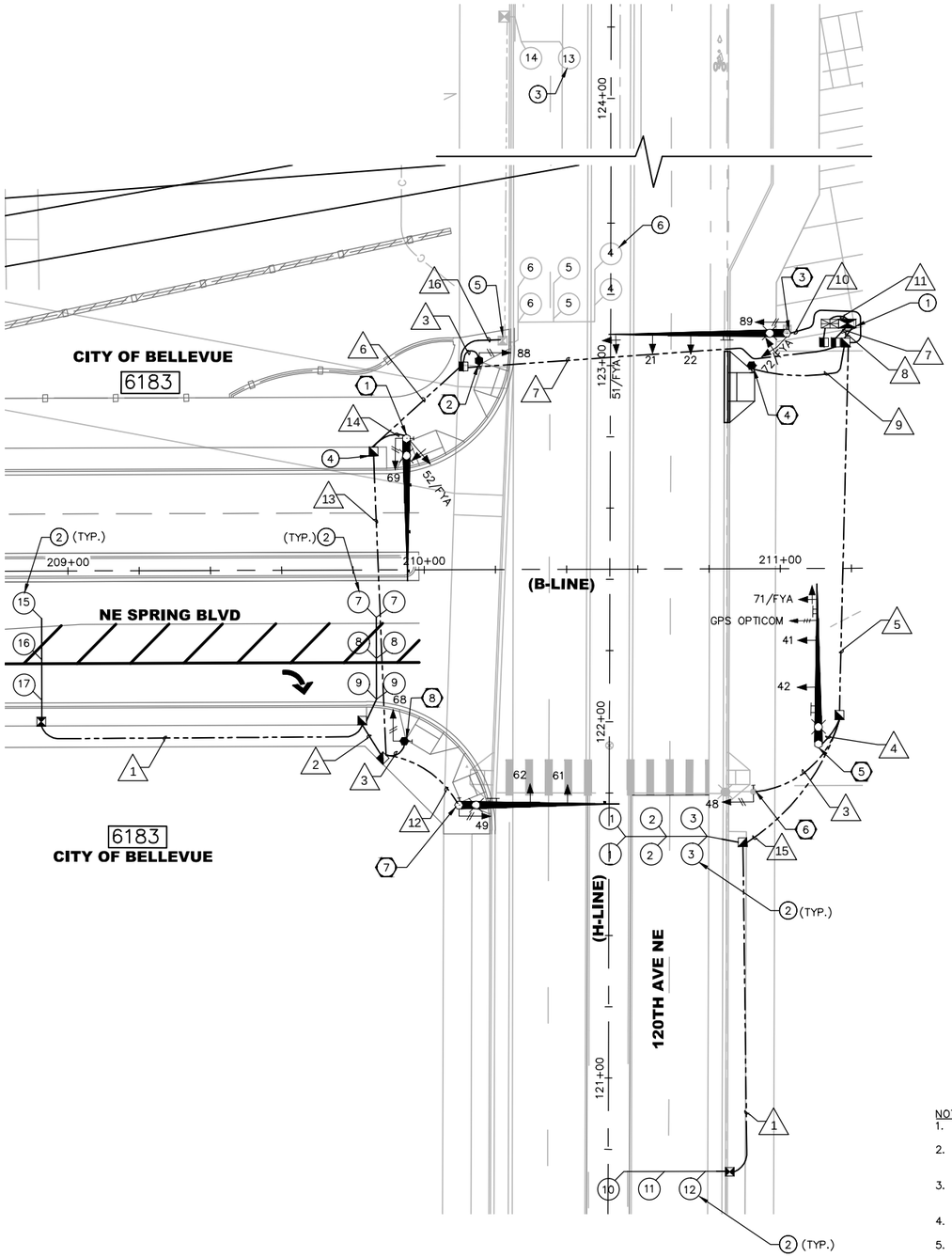

(X) POLE NOTES

1. CONSTRUCT FOUNDATION. PROVIDE AND INSTALL TYPE III SIGNAL STANDARD WITH A 40' MAST ARM. INSTALL ONE SIGNAL HEAD, ONE COUNTDOWN PEDESTRIAN DISPLAY; ONE APS PEDESTRIAN PUSH BUTTON ASSEMBLY, AND ONE TERMINAL CABINET ON THE POLE. ATTACH ONE LED FIXTURE WITH LUMINAIRE ARM ON SIGNAL POLE.
2. CONSTRUCT FOUNDATION. PROVIDE AND INSTALL TYPE PS SIGNAL STANDARD. INSTALL ONE COUNTDOWN PEDESTRIAN DISPLAY AND ONE APS PEDESTRIAN PUSH BUTTON ASSEMBLY.
3. CONSTRUCT FOUNDATION. PROVIDE AND INSTALL TYPE III SIGNAL STANDARD WITH A 50' MAST ARM. INSTALL THREE VEHICLE SIGNAL DISPLAY, AND ONE STREET NAME SIGN ON THE MASTARM. INSTALL ONE VEHICLE SIGNAL HEAD, ONE COUNTDOWN PEDESTRIAN DISPLAY, ONE APS PEDESTRIAN PUSH BUTTON ASSEMBLY AND ONE TERMINAL CABINET ON THE POLE. ATTACH ONE LED FIXTURE WITH LUMINAIRE ARM ON SIGNAL POLE.
4. CONSTRUCT FOUNDATION. PROVIDE AND INSTALL TYPE PPB SIGNAL STANDARD WITH ONE APS PEDESTRIAN PUSH BUTTON ASSEMBLY.
5. CONSTRUCT FOUNDATION. PROVIDE AND INSTALL TYPE III SIGNAL STANDARD WITH A 45' MAST ARM. INSTALL THREE VEHICLE SIGNAL DISPLAYS, ONE GPS EMERGENCY PREEMPTION DETECTOR, ONE TRAFFIC SIGN, AND ONE STREET NAME SIGN ON THE MASTARM. INSTALL ONE TERMINAL CABINET ON THE POLE. ATTACH ONE LED FIXTURE WITH LUMINAIRE ARM ON SIGNAL POLE.
6. DRILL HOLES. INSTALL ONE COUNTDOWN PEDESTRIAN DISPLAY AND ONE APS PEDESTRIAN PUSH BUTTON ASSEMBLY ON EXISTING LUMINAIRE POLE.
7. CONSTRUCT FOUNDATION. PROVIDE AND INSTALL TYPE III SIGNAL STANDARD WITH A 45' MAST ARM. INSTALL TWO VEHICLE SIGNAL DISPLAYS, ONE TENON, AND ONE STREET NAME SIGN ON THE MASTARM. INSTALL ONE COUNTDOWN PEDESTRIAN DISPLAY, ONE APS PEDESTRIAN PUSH BUTTON ASSEMBLY, AND ONE TERMINAL CABINET ON THE POLE. ATTACH ONE LED FIXTURE WITH LUMINAIRE ARM ON SIGNAL POLE.
8. CONSTRUCT FOUNDATION. PROVIDE AND INSTALL TYPE PS SIGNAL STANDARD. INSTALL ONE COUNTDOWN PEDESTRIAN DISPLAY AND ONE APS PEDESTRIAN PUSH BUTTON ASSEMBLY.

(X) CONSTRUCTION NOTES

1. CONSTRUCT FOUNDATION PER COB STANDARD PLAN TSSL–20. INSTALL CITY–PROVIDED TYPE P CONTROLLER CABINET. PROVIDE AND INSTALL SERVICE CABINET PER COB STANDARD PLAN TSSL–21.
2. INSTALL 6–FT LOOP PER COB STANDARD PLANS TSSL–10 THRU TSSL–15.
3. PROTECT EXISTING LOOP(S).
4. SEE SHEET IL3 FOR CONTINUATION OF INTERCONNECT ROUTING.
5. UPGRADE EXISTING JUNCTION BOX TO A TYPE 2 JUNCTION BOX. ADJUST TO GRADE.

NOT USED Ø1	Ø5
Ø2	Ø6
NOT USED Ø3	Ø7
Ø4	Ø8

SIGNAL PHASE DIAGRAM

PERMISSIVE VEHICLE MOVEMENT
PROTECTED VEHICLE MOVEMENT
PEDESTRIAN MOVEMENT

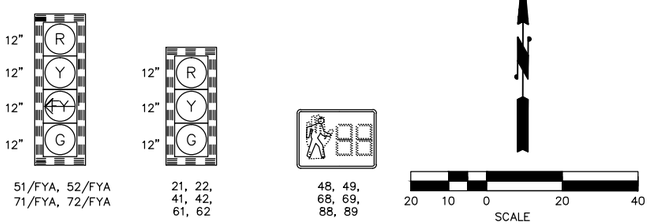

LED SIGNAL DISPLAYS

NOTES:
1. ALL VEHICLE SIGNAL DISPLAYS SHALL BE 12" LED WITH BACKPLATES.
2. ALL PEDESTRIAN SIGNAL HEADS SHALL BE COUNTDOWN SOLID LED AND UTILIZE TYPE E MOUNT. DO NOT OUTLINE LED WITH SYMBOLIC LEGENDS AND "Z"CRATE VISORS.
3. ALL VEHICLE SIGNAL HEADS ON A TYPE II OR III SIGNAL STANDARD SHALL UTILIZE TYPE "M" MOUNT ON MASTARM AND TYPE "K" MOUNT ON SIGNAL POLE.
4. ALL VEHICLE SIGNAL HEADS ON A TYPE I SIGNAL STANDARD SHALL UTILIZE TYPE "D" MOUNT.
5. ALL NEW PEDESTRIAN BUTTONS SHALL BE ACCESSIBLE PEDESTRIAN SIGNAL TYPE.

MARYANN BREILING OLSON — STATE OF WASHINGTON — 36307 — REGISTERED PROFESSIONAL ENGINEER

NO.	DATE	BY	APPR.	REVISIONS

Approved By

TRANSPORTATION DESIGN MANAGER — DATE
S. COSTA
PROJECT MANAGER — DATE

M. OLSON — DESIGNED BY — DATE
J. BUCHANAN — DRAWN BY — DATE
N. CHING — CHECKED BY — DATE

City of Bellevue
TRANSPORTATION DEPARTMENT

HDR

NE SPRING BLVD - ZONE 1B
90% DESIGN

TRAFFIC SIGNAL PLAN
NE SPRING BLVD / 120TH AVE NE

SHEET NAME: TS1

SHT X OF X

90% SUBMITTAL NOT FOR CONSTRUCTION

NOTES:

X NO TERMINAL REQUIRED. CONNECT IDENTIFIED WIRES TO NEUTRAL (AC–) BUS.

+ NO TERMINAL REQUIRED. CONNECT IDENTIFIED WIRES TO DETECTOR COMMON BUS.

☐ TERMINAL REQUIRED. CONNECT IDENTIFIED WIRES TO IDENTIFIED TERMINAL.

LOOP #		NOTE	PPB	HEAD #
	(B) 501		AC+	
	W 502		AC–	
	Y 1		GPS OPTICOM	
	Y/BK 2			
	BL 3			
	BL/W 4			
	O 5			
	O/G 6			
	BR 7			
	BR/W 8			
	V/W 9			
	Y 10			
	BARE 11			
1	B R 611		11, 12	1
2	C O 612			
3	B G 613			
4	C W 616			
5	B BLK 615	X		
6	C 621			2
7	B 622			
8	C 623			
9	B 626			
10	C 625	X		
11	B 631			3
12	C 632			
13	B 633			
14	C 636			
15	B 635			
16	C R 641		41, 42	4
17	B O 642			
	C G 643			
	W 646			
	BLK 645	X		
	651			5
	652			
	653			
	656			
	655			
	R 661		61, 62	6
	O 662			
	G 663			
	W 666			
	BLK 665			
	R 671		71, 72	7
	O 672			
	G 673			
	W 676			
	BLK 675			
	R 681		81, 82	8
	O 682			
	G 683			
	W 686			
	BLK 685	X		
	721			
	722			
	723	X	28,29	2
	724			
	725	+	28,29	
	R 741			
	G 742			
	W 743	X		4
	O 744			
	BLK 745	+		
	R 761		68,69	
	G 762			
	W 763	X		6
	O 764			
	BLK 765	+	68,69	
	R 781			
	G 782			
	W 783	X	88,89	8
	O 784			
	BLK 785	+	88,89	

2CSH 2CSH 2CSH 2CSH 2CSH 2CSH 2CSH 2CSH 2CSH 2CSH 2CSH 2CSH 2CSH 2CSH 2CSH 2CSH 2CSH 2CSH 2CSH 2CSH 2CSH 2CSH 2CSH 2CSH 2#8

CONTROLLER CABINET

POLE #1
POLE #2
POLE #3
POLE #4
POLE #5
POLE #6
POLE #7
POLE #8

HEAD 88: R 781, G 782, W 786 / W, D
PPB 88: B 784, O 785
HEAD 89: W, D / 781 R, 782 G, 786 W
PPB 89: 784 B, 785 O
HEAD 51/FYA: R 651, O 652, BLK 655, G 653, W 656 / R, A, FY, G
HEAD 21: R 621, O 622, G 623, W 626, BLK 625 / R, A, G
HEAD 22: R 621, O 622, G 623, W 626, BLK 625 / R, A, G
HEAD 72/FYA: R 671, O 672, BLK 675, G 673, W 676 / R, A, FY, G
HEAD 52/FYA: R 651, O 652, BLK 655, G 653, W 656 / R, A, FY, G
HEAD 69: W, G, R / 766, 762, 761 / D, W
PPB 69: O, B / 765, 764
HEAD 71/FYA: R 671, O 672, BLK 675, G 673, W 676 / R, A, FY, G
HEAD 41: R 641, O 642, G 643, W 646, BLK 645 / R, A, G
HEAD 42: R 641, O 642, G 643, W 646, BLK 645 / R, A, G
HEAD 68: R 761, G 762, W 763 / D, W
PPB 68: O 764, B 765
HEAD 62: R 661, O 662, G 663, W 666, BLK 665 / R, A, G
HEAD 61: R 661, O 662, G 663, W 666, BLK 665 / R, A, G
HEAD 69: R 761, G 762, W 763 / D, W
PPB 69: O 764, B 765
HEAD 48: D, W / 741 R, 742 G, 743 W
PPB 48: 744 O, 745 B

5C
2CSH
TO CONTROLLER

NOTES:
1. CONNECT ALL VEHICLE AND PEDESTRIAN HEADS AND PEDESTRIAN PUSH BUTTON WIRING AT TERMINAL BLOCK IN TERMINAL CABINET ATTACHED TO SIGNAL POLE.
2. RUN SEPARATE WIRING BETWEEN THE TERMINAL CABINET AND PEDESTRIAN BUTTON. REWIRE THE EXISTING LOOPS USING THE NUMBERING SHOWN ON THIS SHEET.

△ RUN NUMBER IN WIRING SCHEDULE.
SPLICE OR TERMINATION IN CABINET

WIRE NOTES:
5C: 5 CONDUCTOR CABLE
2CSH: 2 CONDUCTOR CABLE SHIELDED

GPS OPTICOM
GPS OPTICOM CABLE

NO.	DATE	BY	APPR.	REVISIONS

Approved By

TRANSPORTATION DESIGN MANAGER S. COSTA DATE
PROJECT MANAGER DATE

M. OLSON DESIGNED BY DATE
J. BUCHANAN DRAWN BY DATE
N. CHING CHECKED BY DATE

City of Bellevue
TRANSPORTATION DEPARTMENT

HDR

NE SPRING BLVD - ZONE 1B
90% DESIGN

WIRING DIAGRAM
NE SPRING BLVD / 120TH AVE NE

SHEET NAME TS2

SHT X OF X

MARYANN BREILING-OLSON STATE OF WASHINGTON 18202 REGISTERED PROFESSIONAL ENGINEER

GENERAL NOTES:

1. UNLESS OTHERWISE NOTED, ALL DIMENSIONS ARE IN FEET.

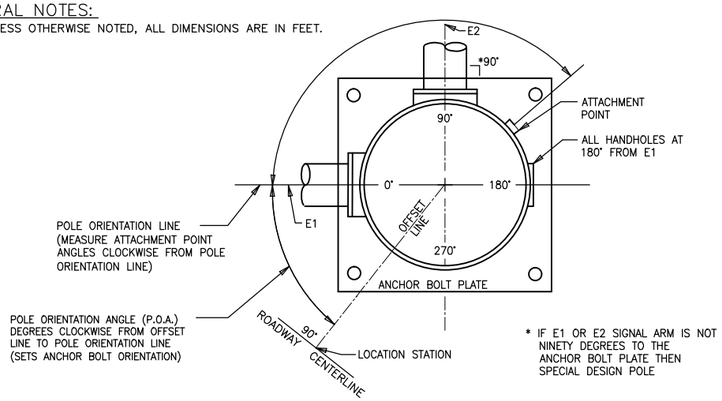

POLE ORIENTATION AND ATTACHMENT POINT DETAIL

NOT TO SCALE

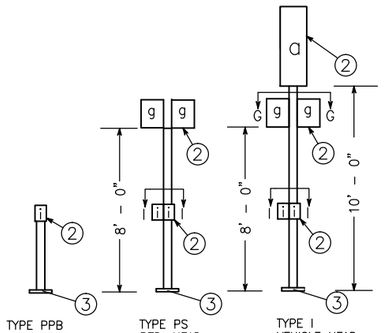

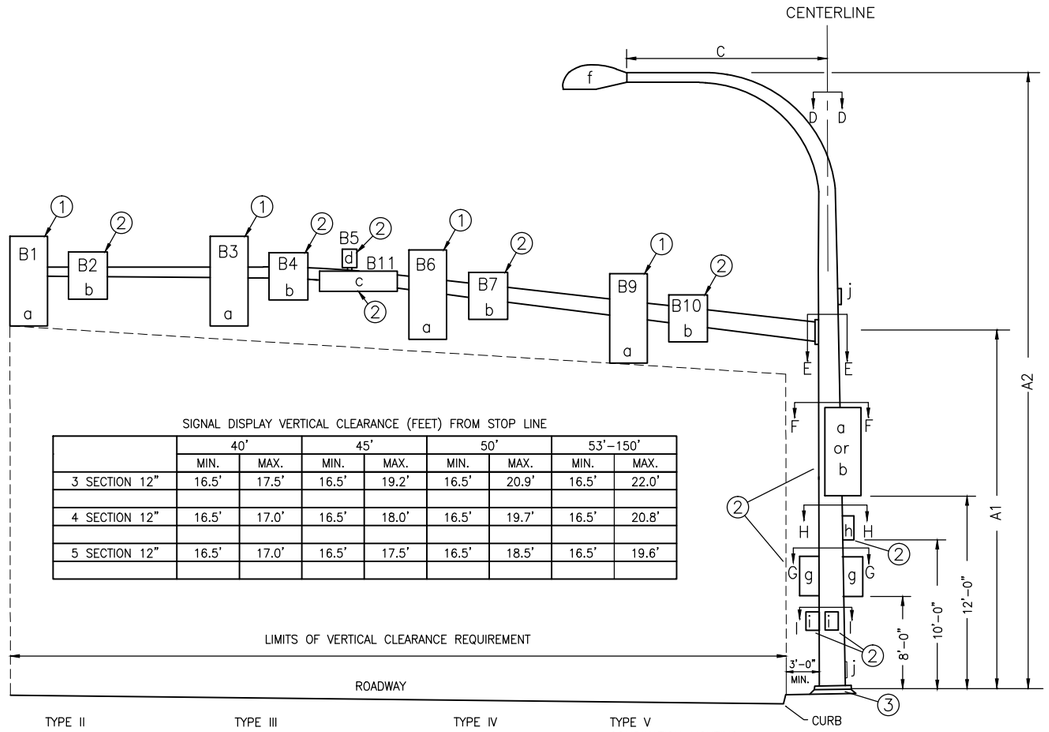

SIGNAL DISPLAY VERTICAL CLEARANCE (FEET) FROM STOP LINE

	40'		45'		50'		53'–150'	
	MIN.	MAX.	MIN.	MAX.	MIN.	MAX.	MIN.	MAX.
3 SECTION 12"	16.5'	17.5'	16.5'	19.2'	16.5'	20.9'	16.5'	22.0'
4 SECTION 12"	16.5'	17.0'	16.5'	18.0'	16.5'	19.7'	16.5'	20.8'
5 SECTION 12"	16.5'	17.0'	16.5'	17.5'	16.5'	18.5'	16.5'	19.6'

NOTES

1. MOUNTING COUPLING INSTALLED AT OFFSET DISTANCE INDICATED IN CHART.
2. FIELD INSTALLED.
3. FOR FOUNDATION DETAILS, DEPTH TABLE, AND IDENTIFICATION TAGS, SEE WSDOT STANDARD PLANS

ALTERNATE NOTE 1 FOR TYPE N MOUNT ONLY:
DRILL 1" HOLE IN MAST ARM AND INSTALL PLASTIC SPLIT BUSHING FOR CABLE ENTRANCE.

LEGEND

a. Vehicle Display
b. Sign
c. Street Name Sign
d. Pre–Empt Detector
e. Deleted (10/22/90)
f. Luminaire
g. Pedestrian Display
h. Cabinet
i. PPB–M
j. Handhole

TYPE LS
LUMINAIRE
STANDARD

TYPE II
MAST ARM
SIGNAL STANDARD

TYPE III
COMBINATION LIGHTING
AND MAST ARM
SIGNAL STANDARD

TYPE IV
STRAIN POLE
STANDARD

TYPE V
COMBINATION LIGHTING
AND STRAIN
POLE STANDARD

TYPE SD
SPECIAL DESIGN STANDARD

SIGNAL STANDARD DETAIL CHART

STD. No. (#)	FIELD LOCATION					TYPE	MOUNTING HEIGHT (FT)		MAST ARM LENGTH (FT)	SIGNAL MAST ARM DATA																		(X)(Y)(Z) TOTAL (FT)³	(X)(Y)(Z) ULTIMATE LOAD	LUMINAIRE ARM (FT)	POLE ATTACHMENT POINT ANGLES (deg)										FOUNDATION DEPTH (FT)			REMARKS
										OFFSET DISTANCE (FT) (Z) (POLE ℄ TO ATTACHMENT POINT)										WINDLOAD AREAS (FT)² (X)(Y)																							
	STATION	OFFSET	LT	RT	P.O.A.		A1	A2		B1	B2	B3	B5	B6	B7	B9	B10	B11	B12	B1	B2	B3	B5	B6	B7	B9	B10	B11	B12				C	D	E1	E2	F	G1	G2	H	I1	I2	3' RD.	3' SQ.	4' RD.	
1	206+96.0	36.0	X		0	III	16.5	35	40	39(T)		27(T)		16(T)						11.6		9.2		9.2						850	1130	6	0	0		315	90		135	270		11	9	9	
2	210+16.5	58.0	X		0	PS																															270			90					FOUNDATION PER WSDOT STD. PLAN J–21.10–04
3	211+00.0	65.0	X		90	III	16.5	35	50	48		37.5		27.0				17.0		11.6		9.2		9.2				15		1405	2300	6	0	0		315	90		135			15	9	9	
4	210+91.0	56.0		X	0	PPB																																		0					FOUNDATION PER WSDOT STD. PLAN J–20.15–03
5	211+10.5	49.5		X	0	III	16.5	35	45	40.5	34.5	29.0	33.5	16.0				10.0		11.6	9	9.2		9.2				10		1294	1500	6	0	0					135			11	8	8	
6	EXISTING	EXISTING		X	0	LS		EX																								EXISTING	EX				180			0					EXISTING
7	210+10.5	65.5		X	90	III	16.5	35	45	41.5 (T)		32.0		22.0				11.0		11.6		9.2		9.2				10		606	1900	6	0	0			90		135	270		13	8	8	
8	209+95.5	48.0		X	0	PS																															270			90					FOUNDATION PER WSDOT STD. PLAN J–21.10–04

(T) INSTALL TENON FOR FUTURE SIGNAL HEAD

MARYANN BREILING OLSON — STATE OF WASHINGTON — 36307 — REGISTERED PROFESSIONAL ENGINEER

NO.	DATE	BY	APPR.	REVISIONS

Approved By

TRANSPORTATION DESIGN MANAGER DATE
S. COSTA
PROJECT MANAGER DATE

M. OLSON
DESIGNED BY DATE
J. BUCHANAN
DRAWN BY DATE
N. CHING
CHECKED BY DATE

City of Bellevue
TRANSPORTATION DEPARTMENT

HDR

NE SPRING BLVD - ZONE 1B
90% DESIGN

POLE SCHEDULE
NE SPRING BLVD/ 120TH AVE NE

SHEET NAME TS3

SHT X OF X

90% SUBMITTAL NOT FOR CONSTRUCTION

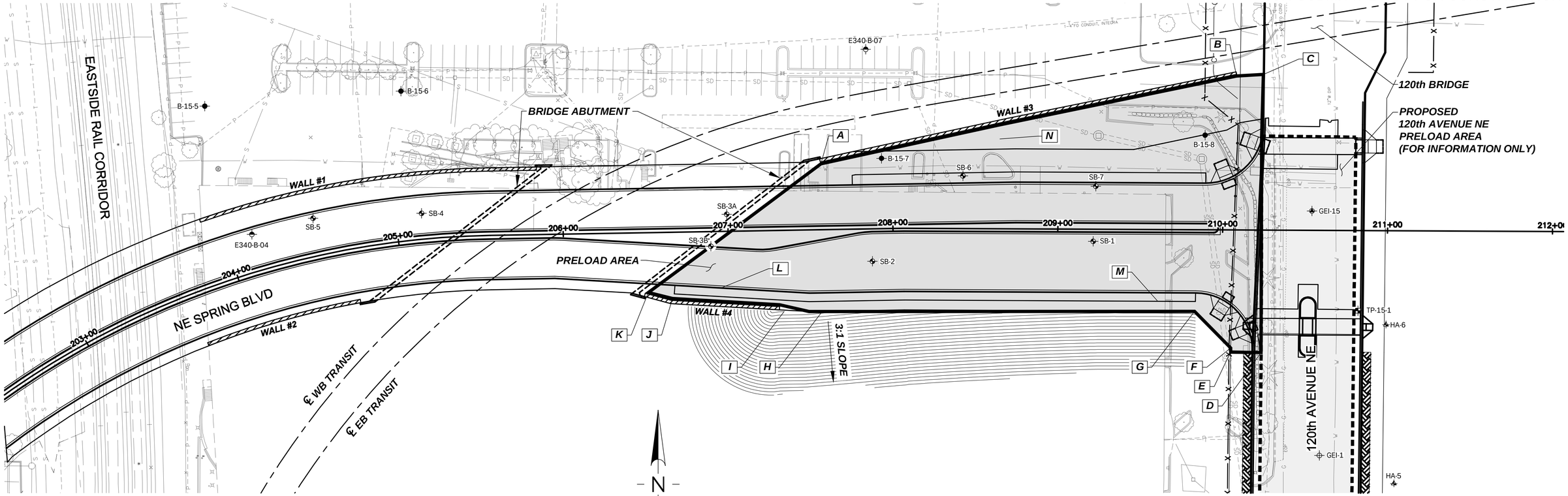

PRELOAD LIMITS		
POINT ID	STATION	OFFSET (FT)
A	207+56.00	39.92 LT
B	210+08.06	93.34 LT
C	210+24.22	94.35 LT
D	210+23.64	74.31 RT
E	210+05.20	74.14 RT
F	210+05.21	71.64 RT
G	209+83.21	49.50 RT
H	207+48.29	49.50 RT
I	207+30.48	45.05 RT
J	206+65.60	40.21 RT
K	206+51.01	36.24 RT

SETTLEMENT PLATE LOCATION		
POINT ID	STATION	OFFSET (FT)
L	206+95.24	34.28 RT
M	209+60.83	43.21 RT
N	208+64.68	54.57 LT

EMBANKMENT PRELOAD TABLE		
SURFACE AREA (SF)	ASSUMED THICKNESS (ft.)	ASSUMED TOTAL VOLUME (CY)
36,975	3	4,108

LEGEND

- SB-1 — BORING BY GEOENGINEERS, 2015
- B-15-1 — BORING BY GEOENGINEERS, DECEMBER 2013
- TP-15-1 — TEST PIT BY GEOENGINEERS, DECEMBER 2013
- GEI-15 — BORING BY GEOENGINEERS, 2013
- E340-B-02 — BORING BY GOLDER ASSOCIATES, 2013
- GEI-1 — BORING BY GEOENGINEERS, 2011
- HA-5 — HAND-AUGURED BORING BY GEOENGINEERS, 2011

NOTES:

1. EMBANKMENT PRELOAD SHALL BE PLACED WITHIN THE LIMITS SHOWN ON THE PLANS AND IN ACCORDANCE WITH THE SPECIFICATIONS.
2. EDGES OF PRELOAD SHALL BE SLOPED AT 1:1 OR AS DEEMED APPROPRIATE BY CONTRACTOR FOR MAINTENANCE.
3. A TOTAL OF THREE (3) SETTLEMENT PLATES SHALL BE INSTALLED AS SHOWN ON THE PLANS AND SURVEYED IN ACCORDANCE WITH THE SPECIFICATIONS.
4. THE BOTTOM 6 INCHES OF THE PRELOAD SHALL CONSIST OF GRAVEL BORROW TO PROTECT SUBGRADE AND ALLOW FOR SETTLEMENT.

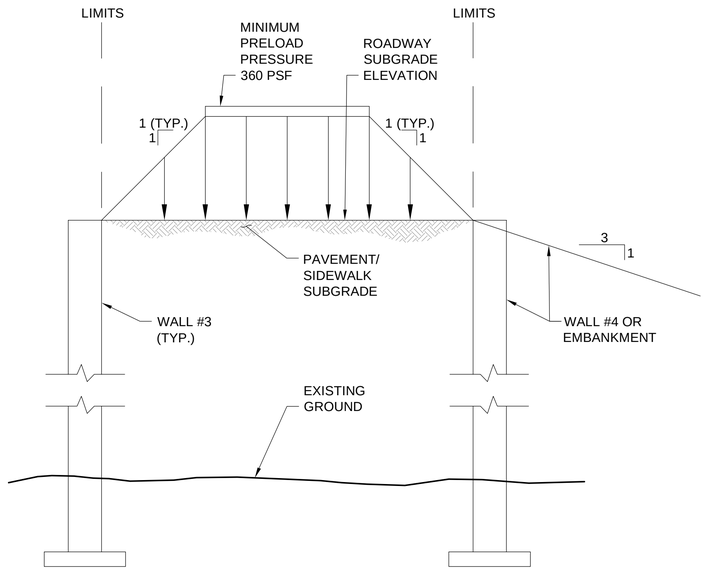

PRELOAD SECTION
(LOOKING AHEAD ON STATION)
NOT TO SCALE

SETTLEMENT PLATE DETAIL

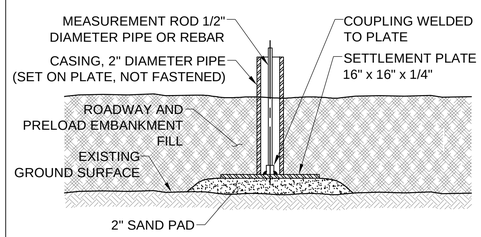

NOT TO SCALE

NOTES:

1. INSTALL PLATES ON 2 INCH-THICK SAND PADS. TAKE INITIAL READING ON TOP OF ROD AND AT ADJACENT GROUND LEVEL PRIOR TO PLACEMENT OF ANY FILL.
2. RECORD THE ELEVATION OF THE TOP OF THE MEASUREMENT ROD IN EACH MARKER AT THE RECOMMENDED TIME INTERVALS. EACH TIME, NOTE THE ELEVATION OF THE ADJACENT FILL SURFACE.
3. READ THE MARKER TO THE NEAREST 0.01 FOOT, OR 0.005 FOOT IF POSSIBLE. NOTE THE FILL ELEVATION TO THE NEAREST 0.1 FOOT.
4. THE ELEVATIONS SHALL BE REFERENCED TO A TEMPORARY BENCHMARK LOCATED ON STABLE GROUND AT LEAST 100 FEET FROM THE PRELOAD.

SHAUN D. STAUFFER — STATE OF WASHINGTON — 43250 — REGISTERED PROFESSIONAL ENGINEER

NO.	DATE	BY	APPR.	REVISIONS

Approved By

TRANSPORTATION DESIGN MANAGER S. COSTA DATE

PROJECT MANAGER DATE

T. BAILEY — DESIGNED BY — DATE
T. MICHAUD — DRAWN BY — DATE
S. STAUFFER — CHECKED BY — DATE

City of Bellevue
TRANSPORTATION DEPARTMENT

HDR

NE SPRING BLVD - ZONE 1A
90% DESIGN

PRELOAD PLAN

SHEET NAME PL01

SHT X OF X

P:\0\0526161\02\CAD\0526161-02 PL01 Preload Plan.dwg — 08 Oct, 2015 1:02pm — tmichaud

SECTION 28, T. 25 N., R5E., W.M.
KING COUNTY

90% SUBMITTAL NOT FOR CONSTRUCTION

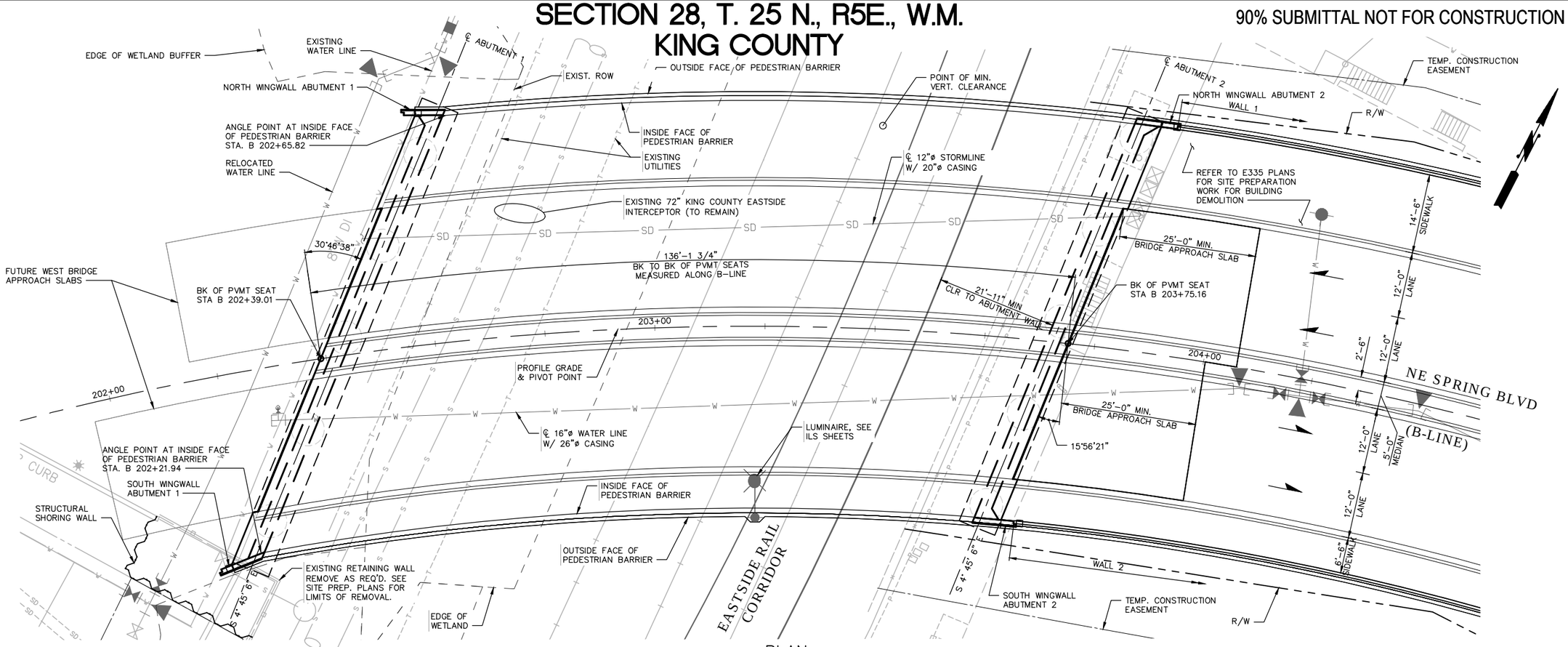

PLAN

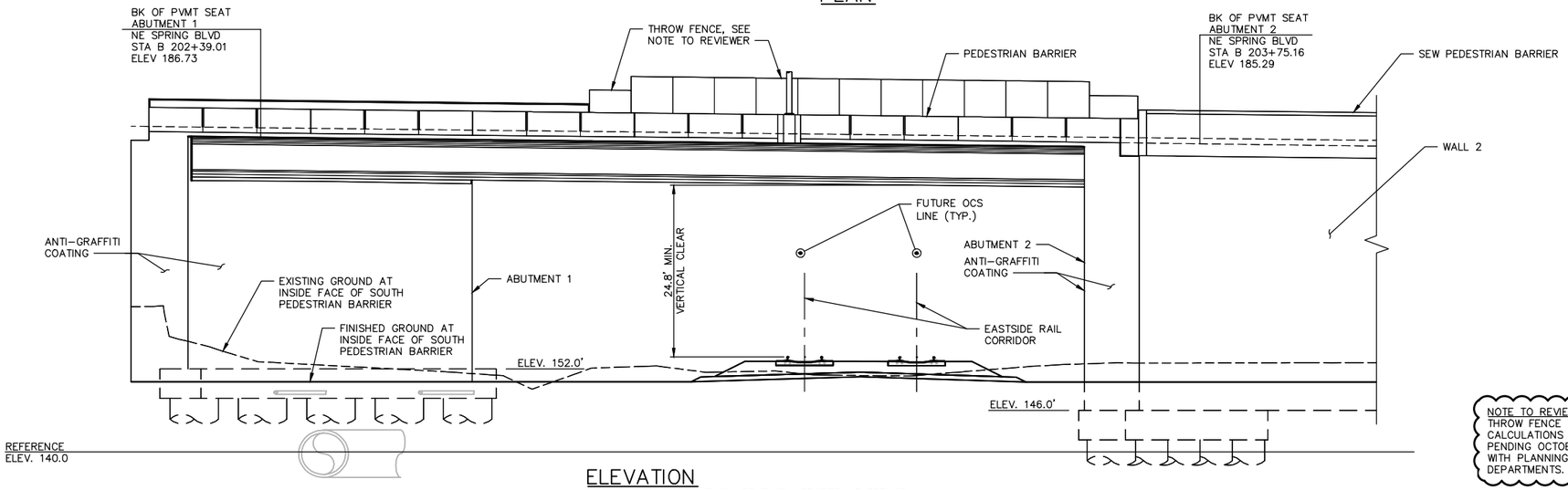

ELEVATION

GRADE ELEVATIONS SHOWN ARE FINISH GRADES AT TOP OF BRIDGE DECK ON B-LINE AND ARE EQUAL TO PROFILE GRADE.

5 2.5 0 5 10
SCALE – FEET

PRESTRESSED PRECAST GIRDERS (WF74G)
LIVE LOADING: HL-93

NOTE TO REVIEWER:
THROW FENCE MATERIALS, DESIGN, AND CALCULATIONS TO BE DETERMINED PENDING OCTOBER 2015 COORDINATION WITH PLANNING AND TRANSPORTATION DEPARTMENTS.

ROBERT D. RICHARDSON — STATE OF WASHINGTON — 33999 — REGISTERED PROFESSIONAL ENGINEER

DATUM
NAVD 1988

NO.	DATE	BY	APPR.	REVISIONS

Approved By

TRANSPORTATION DESIGN MANAGER — DATE
S. COSTA
PROJECT MANAGER — DATE

E. CLARK — DESIGNED BY — DATE
H. GONSIOR — DRAWN BY — DATE
R. RICHARDSON — CHECKED BY — DATE

City of Bellevue
TRANSPORTATION DEPARTMENT

HDR

NE SPRING BLVD - ZONE 1B
90% DESIGN

WEST BRIDGE
PLAN & PROFILE

SHEET NAME BRW1

SHT 100 OF 185

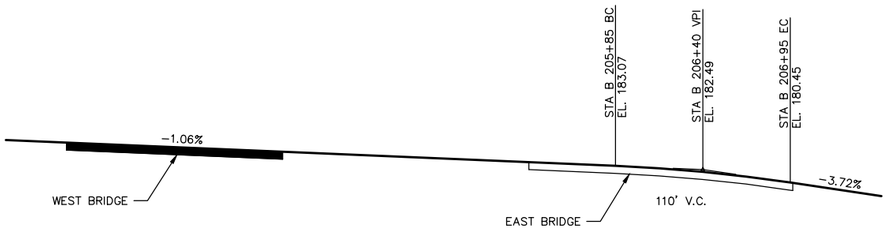

NE SPRING BLVD VERTICAL PROFILE

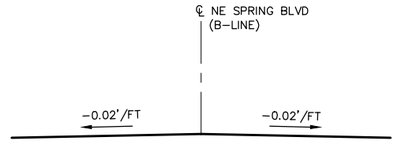

BRIDGE/ROADWAY CROSS SLOPE

HORIZONTAL CURVE DATA					
P.I. STATION	DELTA	RADIUS	TANGENT	LENGTH	BACK TANGENT BEARING
STA B 203+73.13	41°49'16" RT	525'	200.59'	383.21'	N 47°11'47.10" E

GENERAL NOTES:

1. ALL MATERIALS AND WORKMANSHIP SHALL BE IN ACCORDANCE WITH THE CURRENT REQUIREMENTS OF THE WASHINGTON STATE DEPARTMENT OF TRANSPORTATION STANDARD SPECIFICATIONS FOR ROAD, BRIDGE AND MUNICIPAL CONSTRUCTION, DATED 2014, AND AMENDMENTS AS AMENDED BY THE CITY OF BELLEVUE SPECIAL PROVISIONS.
2. THE STRUCTURE HAS BEEN DESIGNED IN ACCORDANCE WITH THE REQUIREMENTS OF THE AASHTO LRFD BRIDGE DESIGN SPECIFICATIONS SEVENTH EDITION AND INTERIMS DATED 2014, AND THE SOUND TRANSIT LINK DESIGN CRITERIA MANUAL (DCM) REVISION 2, JULY 2012. SEISMIC DESIGN HAS BEEN COMPLETED USING THE FOLLOWING SEISMIC PARAMETERS:

SEISMIC DESIGN PARAMETERS			
SEISMIC DESIGN CASE	OPERATING DESIGN EARTHQUAKE (ODE) 150-YEAR RETURN PERIOD	MAXIMUM DESIGN EARTHQUAKE (MDE) 2,500-YEAR RETURN PERIOD	AASHTO/WSDOT 1,000-YEAR RETURN PERIOD
(Fpga)(PGA)=As	(1.2)(0.176)=0.211	(1.0)(0.594)=0.594	(1.0)(0.426)=0.426
(Fa)(Ss)=SDs	(1.2)(0.386)=0.463	(1.0)(1.341)=1.341	(1.02)(0.954)=0.973
(Fv)(S1)=SD1	(1.68)(0.12)=0.202	(1.35)(0.454)=0.613	(1.48)(0.317)=0.469
SITE CLASS	C	C	C
kh (DESIGN)	0.211 (NO REDUCTION OF As)	0.297 (50% REDUCTION OF As)	0.213 (50% REDUCTION OF As)

3. DEAD LOAD INCLUDES ADDITIONAL ROADWAY WEARING SURFACE OF 25 POUND PER SQUARE FOOT.
4. DESIGN DEAD LOAD:
   WATERLINE 315 LB/LF
   STORM DRAIN 225 LB/LF
5. DRILLED SHAFTS HAVE BEEN DESIGNED USING THE FOLLOWING NOMINAL RESISTANCES FOR THE STRENGTH, EXTREME AND SERVICE LIMIT STATES.

LIMIT STATE	SKIN FRICTION RESISTANCE (KIP)	END BEARING RESISTANCE (KIP)
STRENGTH & SERVICE		
EXTREME		

   SEE GEOTECHNICAL REPORT FOR THE PROJECT FOR DETAILS.
6. FALSEWORK SHALL BE CAREFULLY RELEASED TO PREVENT IMPACT OR UNDUE STRESS IN THE STRUCTURE.
7. CONCRETE IN THE BRIDGE DECK SHALL BE CONCRETE CL 4000D. CONCRETE IN THE BRIDGE APPROACH SLAB SHALL BE CONCRETE CL 4000A. SHAFTS SHALL BE CONCRETE CL 4000P. ALL OTHER CAST-IN-PLACE CONCRETE SHALL BE CLASS 4000 UNLESS NOTED OTHERWISE.
8. ALL STEEL REINFORCING SHALL CONFORM TO ASTM A706 UNLESS NOTED OTHERWISE.
9. THE EXPOSED EXTERIOR SURFACE OF WINGWALLS, BRIDGE GIRDERS, END DIAPHRAGMS, PILE CAP, & ABUTMENT SHALL RECEIVE PIGMENTED SEALER.
10. UNLESS OTHERWISE SHOWN ON THE PLANS, THE CONCRETE COVER MEASURED FROM THE FACE OF THE CONCRETE TO THE FACE OF ANY REINFORCING BAR SHALL BE AS FOLLOWS:

TOP OF BRIDGE DECK	2½"
BOTTOM OF BRIDGE DECK	1"
CONCRETE CAST AGAINST EARTH	3"
CONCRETE EXPOSED TO EARTH OR WEATHER:	
PRIMARY REINFORCEMENT	2"
SECONDARY REINFORCEMENT (TIES OR STIRRUPS)	1½"

11. [NXX] OR [NN] INDICATES REINFORCING BAR MARK NUMBER.
12. ▽ INDICATES EPOXY COATED REINFORCING BAR.
13. ALL EXISTING DIMENSIONS AND EXISTING ELEVATIONS SHALL BE VERIFIED IN THE FIELD BY THE CONTRACTOR.
14. THE UTILITY AND STORMLINES SHOWN ON THE BRIDGE ARE APPROXIMATE ONLY. THE CONTRACTOR SHALL COORDINATE THESE PLANS WITH THE DRAINAGE PLANS AND THE WATER MAIN SHEETS.
15. CONDUITS, JUNCTION BOXES, AND UTILITIES SHOWN ARE APPROXIMATE. CONTRACTOR SHALL COORDINATE THESE PLANS WITH THE ILLUMINATION AND SIGNING PLANS.

LEGEND:

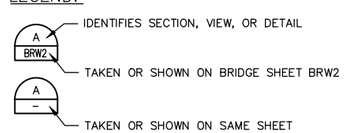

NO.	DATE	BY	APPR.	REVISIONS

Approved By

TRANSPORTATION DESIGN MANAGER DATE
S. COSTA
PROJECT MANAGER DATE

E. CLARK
DESIGNED BY DATE
H. GONSIOR
DRAWN BY DATE
R. RICHARDSON
CHECKED BY DATE

City of Bellevue
TRANSPORTATION DEPARTMENT

HDR

NE SPRING BLVD - ZONE 1B
90% DESIGN

WEST BRIDGE
GENERAL NOTES

SHEET NAME **BRW2**

SHT 101 OF 185

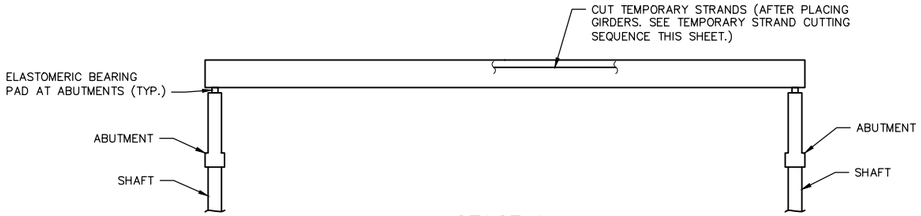

STAGE 1
SET GIRDERS IN PLACE

1. PRIOR TO ERECTING SUPERSTRUCTURE, PLACE SHAFTS, BRIDGE ABUTMENTS, AND ANY FALSEWORK REQUIRED.
2. INSTALL TEMPORARY BRACING FOR ERECTION IN ACCORDANCE WITH STD. SPEC. SECTION 6-02.3(17)F.

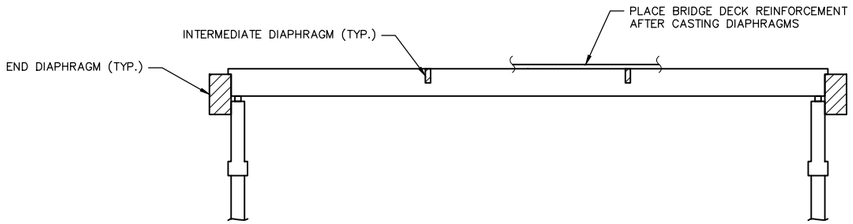

STAGE 2
CAST DIAPHRAGMS AND PLACE BRIDGE DECK REINFORCEMENT

INSTALL TEMPORARY BRACING FOR DIAPHRAGM AND BRIDGE DECK PLACEMENT IN ACCORDANCE WITH STD. SPEC. SECTION 6-02.3(17)F.

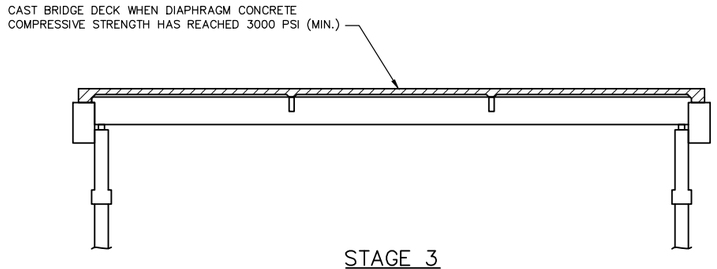

STAGE 3
CAST BRIDGE DECK

PLACE BRIDGE DECK CONCRETE IN A CONTINUOUS POUR.

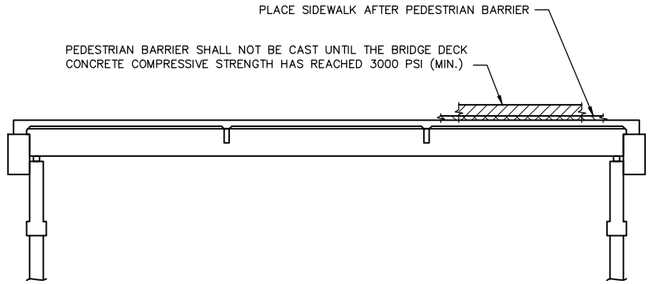

STAGE 4
PLACE PEDESTRIAN BARRIER & SIDEWALK

CONSTRUCTION SEQUENCE ~ SUPERSTRUCTURE

TEMPORARY STRAND CUTTING SEQUENCE:

1. ERECT AND BRACE GIRDERS.
2. REMOVE EXPANDED POLYSTYRENE IN 2" x 6" RECESSES IN TOP FLANGE OF GIRDERS.
3. CUT STRANDS IN 2"x 6"RECESSES. STRANDS MAY BE CUT BY USING A CUTTING TORCH AND MOVING THE FLAME BACK AND FORTH OVER THE LENGTH OF EXPOSED STRAND TO LET INDIVIDUAL WIRES BREAK ONE AT A TIME TO LESSEN THE SHOCK TO THE GIRDER. STRANDS SHALL BE RELEASED IN A SYMMETRICAL MANNER AROUND THE GIRDER CENTERLINE STARTING WITH THOSE NEAREST THE CENTERLINE AND WORKING OUTWARDS.
4. DO NOT ALLOW ANY MOISTURE TO ENTER THE RECESS. REMOVE ALL MOISTURE IN RECESS PRIOR TO FILLING RECESS WITH GROUT.
5. WITHIN 24 HOURS OF CUTTING THE TEMPORARY STANDS, FILL THE RECESS WITH A GROUT CONFOMRING TO STD. SPEC. 9-20.3(a).

ROBERT D. RICHARDSON — STATE OF WASHINGTON — 33999 — REGISTERED PROFESSIONAL ENGINEER

NO.	DATE	BY	APPR.	REVISIONS

Approved By

TRANSPORTATION DESIGN MANAGER DATE

S. COSTA
PROJECT MANAGER DATE

E. CLARK — DESIGNED BY DATE
H. GONSIOR — DRAWN BY DATE
R. RICHARDSON — CHECKED BY DATE

City of Bellevue
TRANSPORTATION DEPARTMENT

HDR

NE SPRING BLVD - ZONE 1B
90% DESIGN

WEST BRIDGE CONSTRUCTION SEQUENCE

SHEET NAME **BRW3**

SHT 102 OF 185

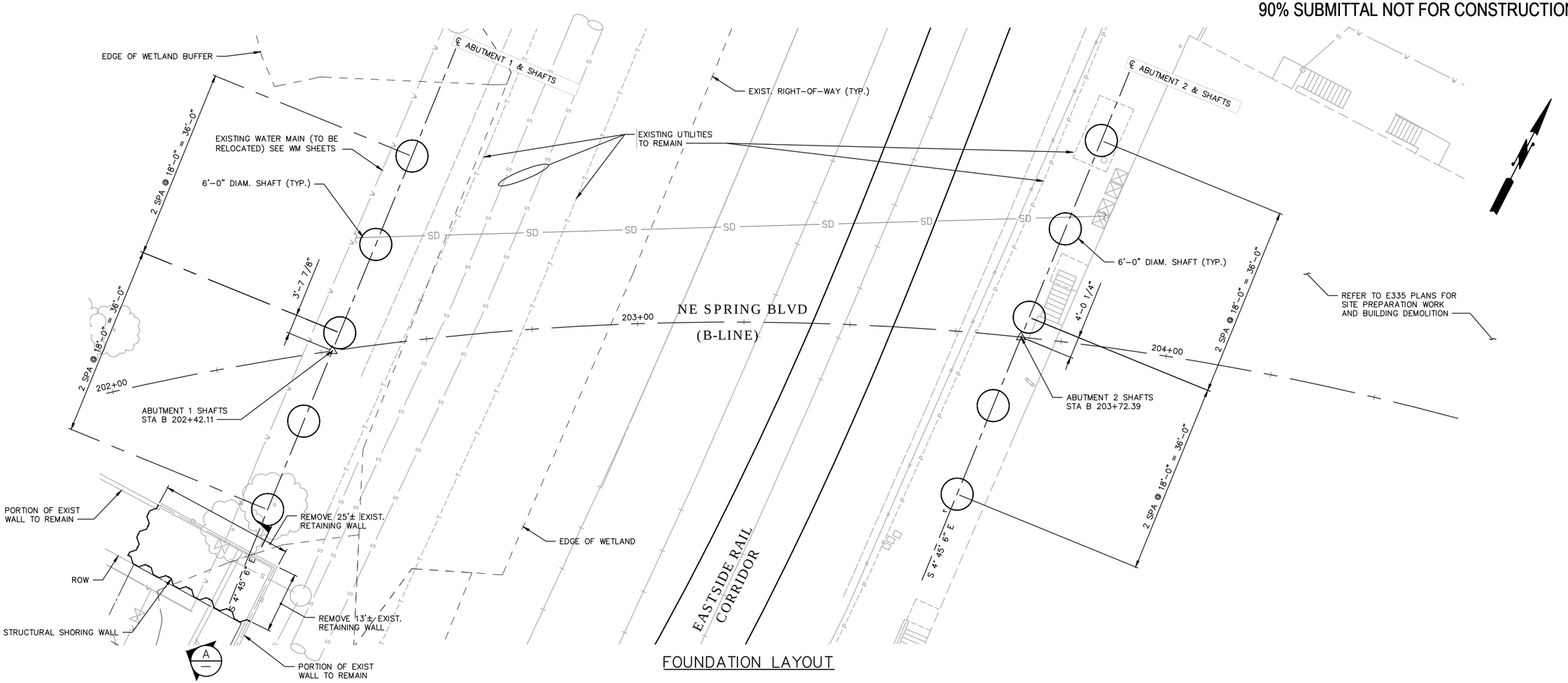

FOUNDATION LAYOUT

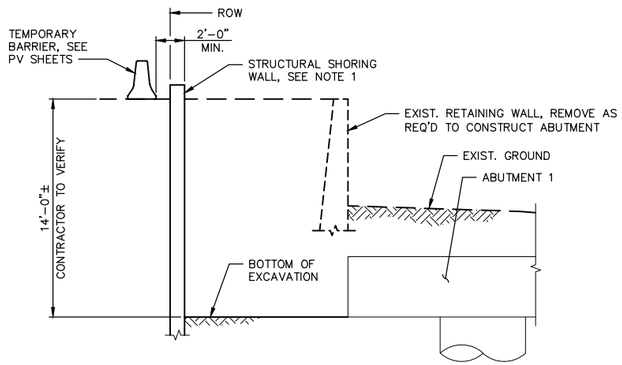

SECTION A
N.T.S.

NOTES:

1. CONTRACTOR SHALL DESIGN AND INSTALL STRUCTURAL SHORING WALL AS REQUIRED TO REMOVE PORTION OF EXISTING RETAINING WALL AND CONSTRUCT ABUTMENT. SEE SPECIAL PROVISIONS.

10 5 0 10 20
SCALE – FEET

ROBERT D. RICHARDSON STATE OF WASHINGTON 33999 REGISTERED PROFESSIONAL ENGINEER

NO.	DATE	BY	APPR.	REVISIONS

Approved By

TRANSPORTATION DESIGN MANAGER DATE
S. COSTA
PROJECT MANAGER DATE

E. CLARK
DESIGNED BY DATE
H. GONSIOR
DRAWN BY DATE
R. RICHARDSON
CHECKED BY DATE

City of Bellevue
TRANSPORTATION DEPARTMENT

HDR

NE SPRING BLVD - ZONE 1B
90% DESIGN

WEST BRIDGE
FOUNDATION LAYOUT

SHEET NAME BRW4

SHT 103 OF 185

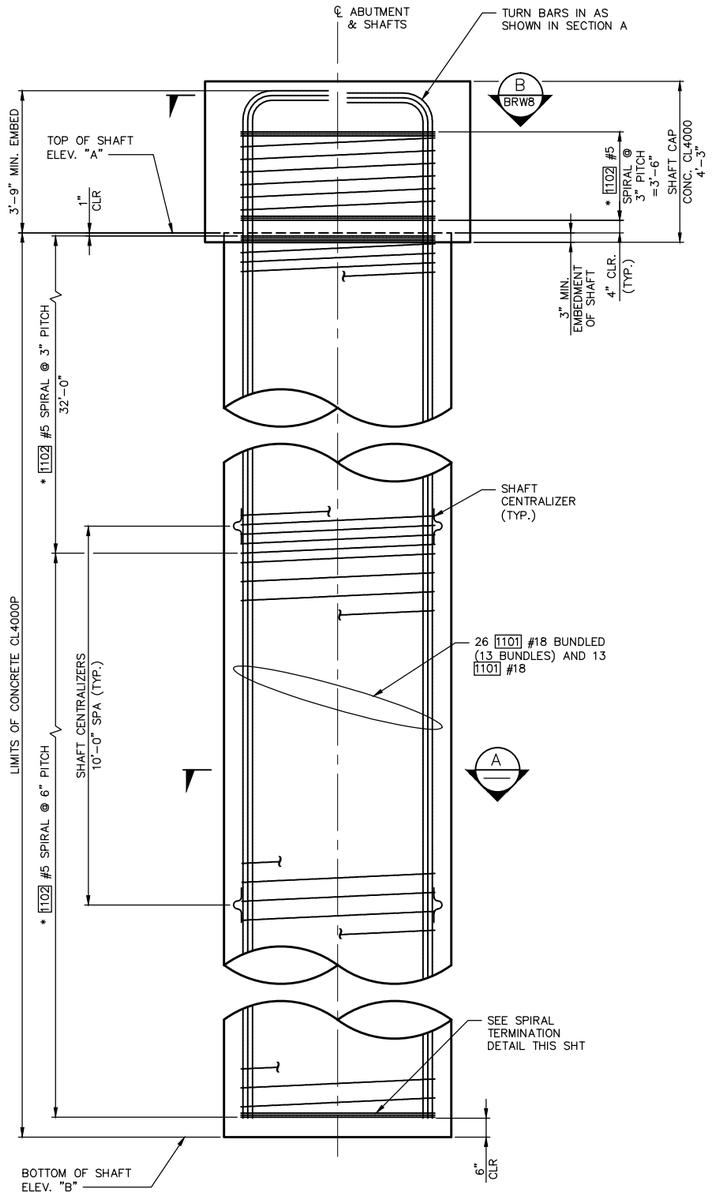

SHAFT ELEVATION
N.T.S.

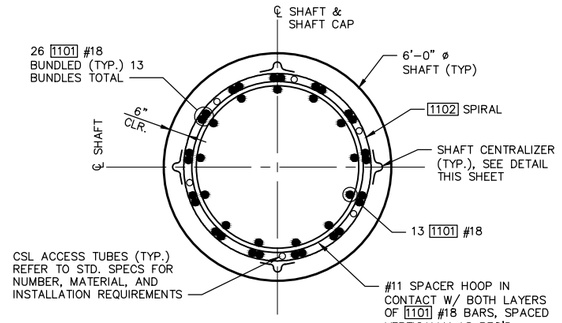

SECTION A
N.T.S.

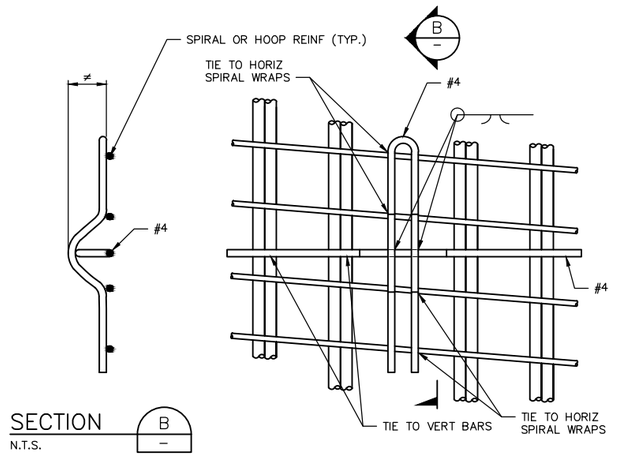

SECTION B
N.T.S.

CENTRALIZER NOTES

1. EPOXY COAT CENTRALIZER OR PAINT WITH INORGANIC ZINC AFTER FABRICATION.
2. EACH LEG SHALL BE TIED TO TWO VERTICAL BAR BUNDLES AND TWO SPIRAL WRAPS OR TWO HOOPS.
3. SEE STD. SPEC. SECTION 6-19.3(5)B FOR SPACING REQUIREMENTS.
4. ≠ MINIMUM CONCRETE COVER MINUS ½".

CENTRALIZER DETAIL
N.T.S.

SHAFT SCHEDULE		
SHAFTS	TOP OF SHAFT ELEV. 'A' (FT)	BOTTOM OF SHAFT ELEV. 'B' (FT)
ABUTMENT 1	148.0	96.0
ABUTMENT 2	142.0	90.0

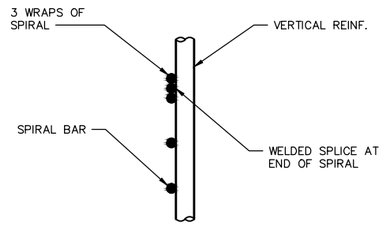

SPIRAL TERMINATION DETAIL
N.T.S.

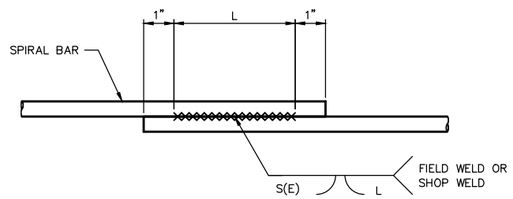

SPIRAL WELDED LAP SPLICE DETAIL
N.T.S.
WELDING SHALL MEET THE REQUIREMENTS OF STD. SPEC. 6-02.3(24)E.
FOR WELD DIMENSIONS, SEE TABLE BELOW.

	WELD DIMENSIONS (INCHES)		
BAR SIZE	S	E	LENGTH (L)
#5	5/16	3/16	6"

SHAFT BAR LIST				
MARK	SIZE	QTY. (PER SHAFT)	LENGTH, L (OUT TO OUT)	TOTAL WEIGHT (PER SHAFT)
1101	18	39	59	31,294
1102	5	1	a	

WEIGHTS DO NOT INCLUDE WELDS, SPIRAL SPLICES, OR LONGITUDINAL SPLICES

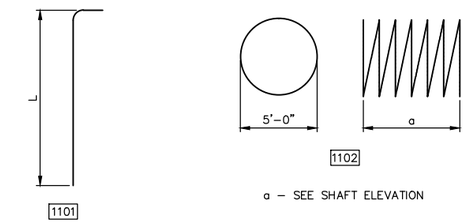

NOTE:
* SPIRAL SPLICES SHALL BE WELDED, SEE DETAIL THIS SHEET

ROBERT D. RICHARDSON STATE OF WASHINGTON 33999 REGISTERED PROFESSIONAL ENGINEER

NO.	DATE	BY	APPR.	REVISIONS

Approved By

TRANSPORTATION DESIGN MANAGER DATE
S. COSTA
PROJECT MANAGER DATE

E. CLARK DESIGNED BY DATE
H. GONSIOR DRAWN BY DATE
R. RICHARDSON CHECKED BY DATE

City of Bellevue
TRANSPORTATION DEPARTMENT

HDR

NE SPRING BLVD - ZONE 1B
90% DESIGN

WEST BRIDGE
SHAFT DETAILS

SHEET NAME BRW5

90% SUBMITTAL NOT FOR CONSTRUCTION

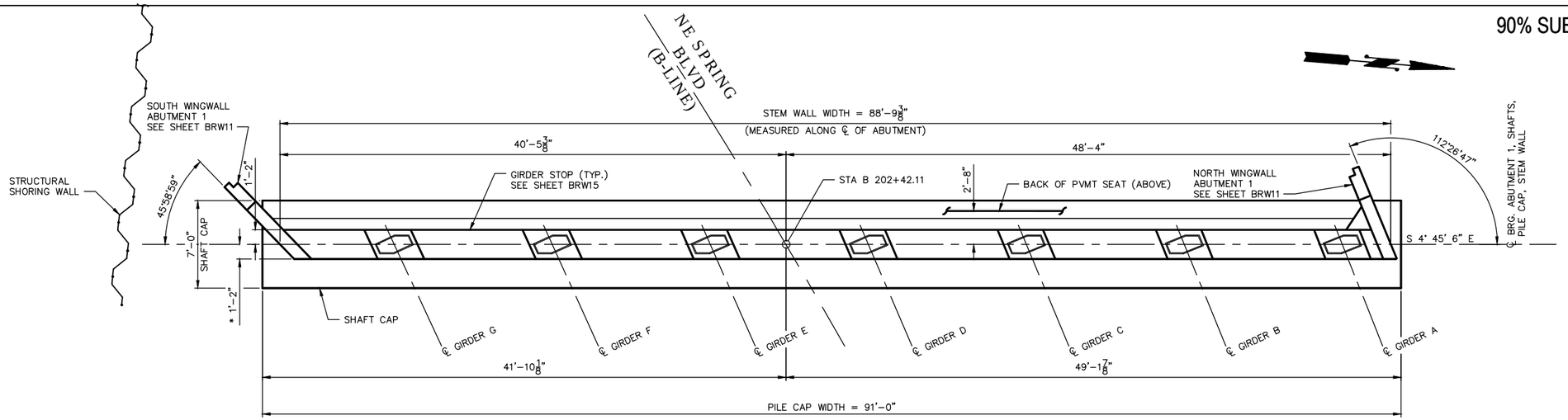

ABUTMENT 1 PLAN

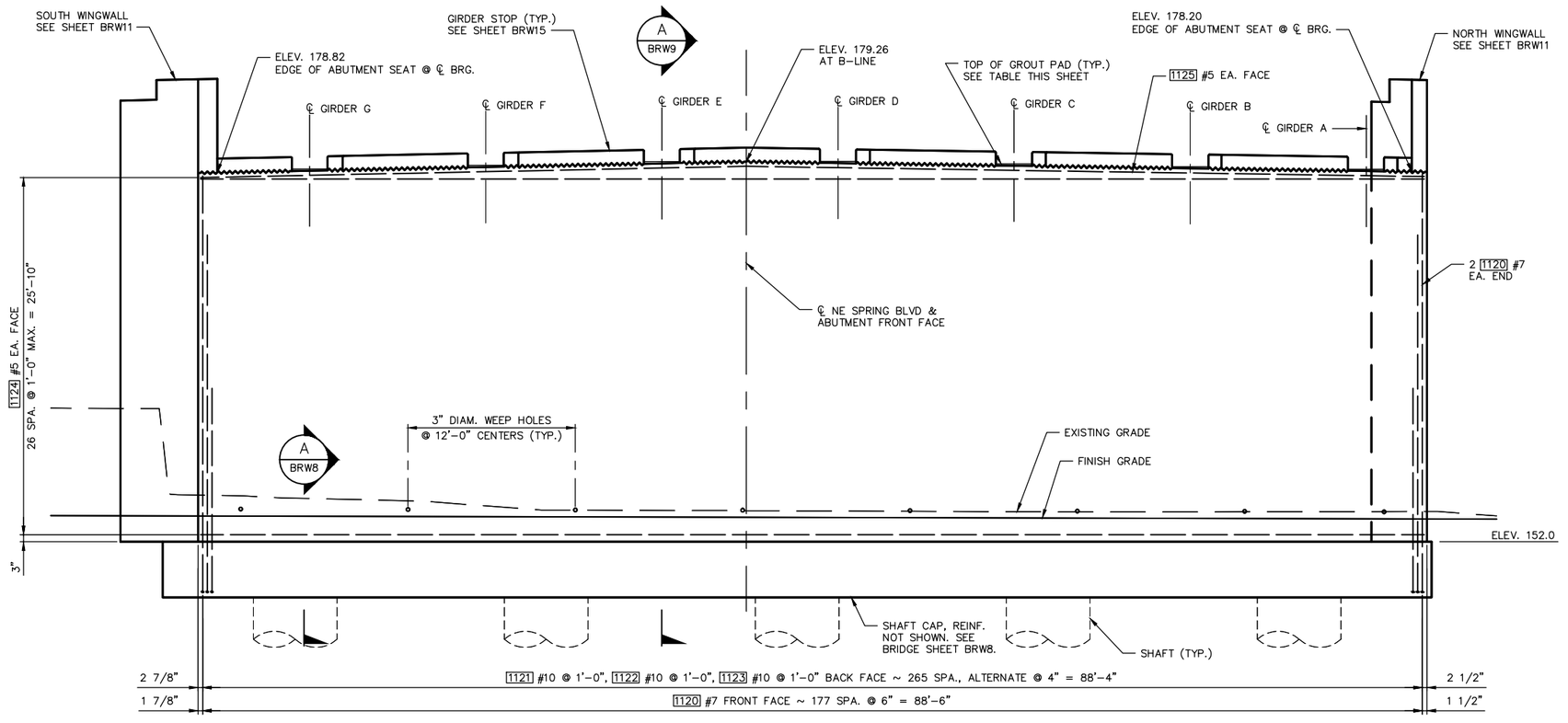

ABUTMENT 1 ELEVATION

(LOOKING BACK ON STATION)
ELEVATIONS AT ℄ BEARING UNLESS NOTED OTHERWISE
WINGWALL REINFORCING NOT SHOWN

NOTES:
1. TEMPORARY SUPPORT FOR STORM LINE NOT SHOWN. SEE BRIDGE SHEET BRW35 AND DRAINAGE PLANS.
2. SEE BRIDGE SHEET BRW9 FOR 1126 #5 TIE SPACING AND DETAILS.

* DIMENSION INCLUDES 2" ARCHITECTURAL TREATMENT. SEE LS AND LSD SHEETS

TOP OF GROUT PAD ELEVATIONS	
GIRDER	ELEVATION
A	178.39
B	178.67
C	178.96
D	179.24
E	179.32
F	179.17
G	179.03

5 2.5 0 5 10
SCALE – FEET

ROBERT D. RICHARDSON STATE OF WASHINGTON 33999 REGISTERED PROFESSIONAL ENGINEER

NO.	DATE	BY	APPR.	REVISIONS

Approved By

TRANSPORTATION DESIGN MANAGER DATE
S. COSTA
PROJECT MANAGER DATE

E. CLARK
DESIGNED BY DATE
H. GONSIOR
DRAWN BY DATE
R. RICHARDSON
CHECKED BY DATE

City of Bellevue
TRANSPORTATION DEPARTMENT

HDR

NE SPRING BLVD - ZONE 1B
90% DESIGN

WEST BRIDGE
ABUTMENT 1 PLAN & ELEVATION

SHEET NAME BRW6

SHT 105 OF 185

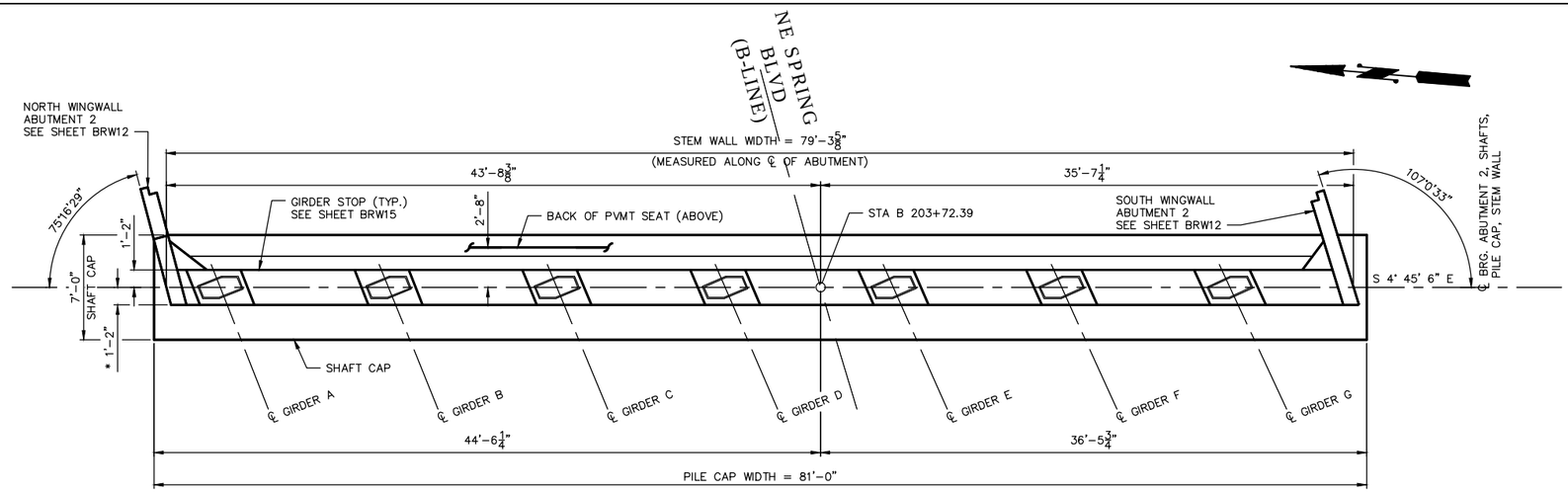

ABUTMENT 2 PLAN

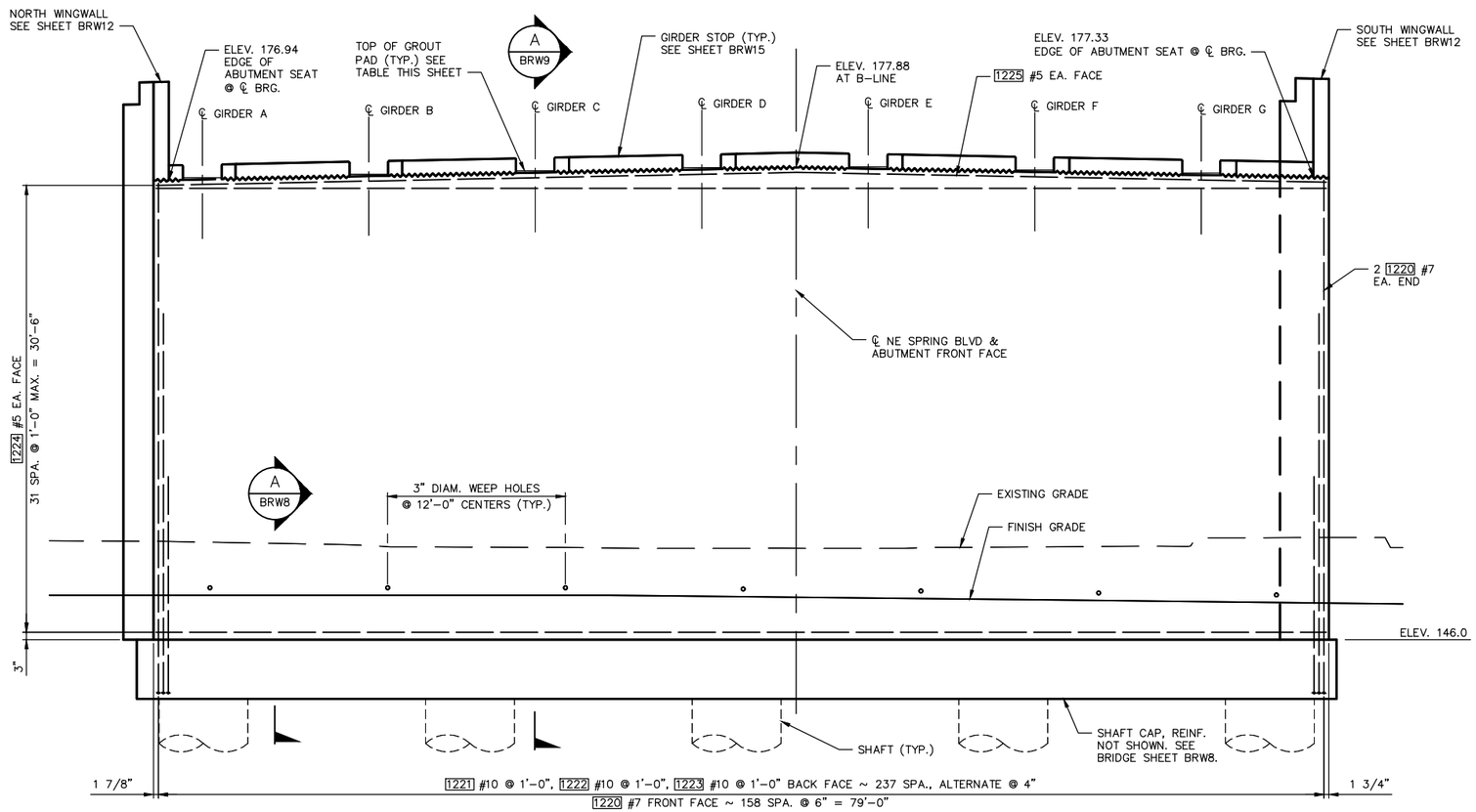

ABUTMENT 2 ELEVATION

ELEVATIONS AT ℄ BEARING UNLESS NOTED OTHERWISE
WINGWALL REINFORCING NOT SHOWN

NOTES:
1. SEE BRIDGE SHEET BRW9 FOR 1226 #5 TIE SPACING AND DETAILS.

* DIMENSION INCLUDES 2" ARCHITECTURAL TREATMENT. SEE LS AND LSD SHEETS.

TOP OF GROUT PAD ELEVATIONS	
GIRDER	ELEVATION
A	177.13
B	177.37
C	177.62
D	177.87
E	177.93
F	177.75
G	177.57

5 2.5 0 5 10
SCALE – FEET

ROBERT D. RICHARDSON STATE OF WASHINGTON 33999 REGISTERED PROFESSIONAL ENGINEER

NO.	DATE	BY	APPR.	REVISIONS

Approved By

TRANSPORTATION DESIGN MANAGER DATE
S. COSTA
PROJECT MANAGER DATE

E. CLARK — DESIGNED BY DATE
H. GONSIOR — DRAWN BY DATE
R. RICHARDSON — CHECKED BY DATE

City of Bellevue
TRANSPORTATION DEPARTMENT

HDR

NE SPRING BLVD - ZONE 1B
90% DESIGN

WEST BRIDGE
ABUTMENT 2 PLAN & ELEVATION

SHEET NAME BRW7

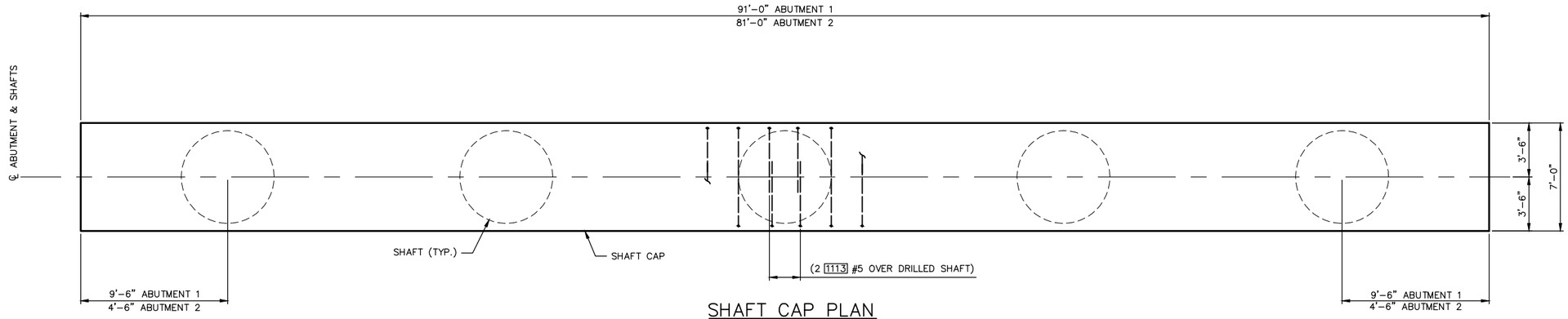

SHAFT CAP PLAN

N.T.S.
(ABUTMENT WALL NOT SHOWN FOR CLARITY)

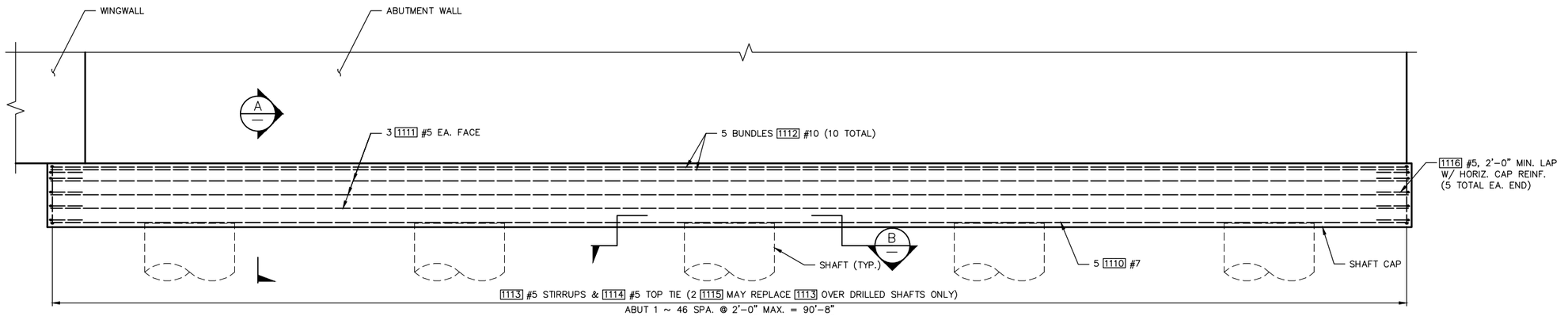

SHAFT CAP ELEVATION

N.T.S.
(ABUTMENT WALL AND SHAFT REINF. NOT SHOWN FOR CLARITY)

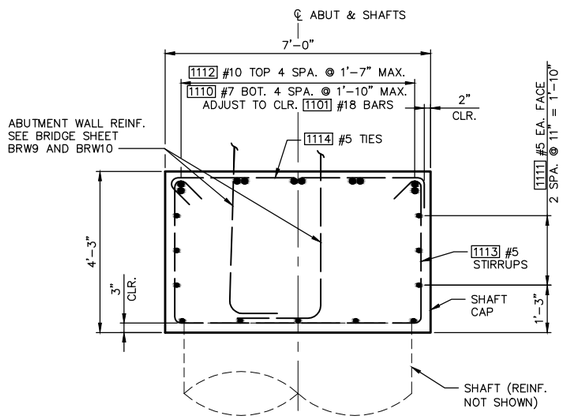

SHAFT CAP SECTION A

BRW6, BRW7, BRW8

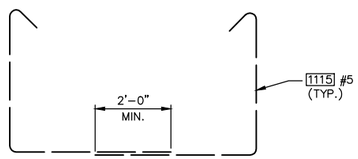

ALTERNATE STIRRUP DETAIL ABOVE DRILLED SHAFT

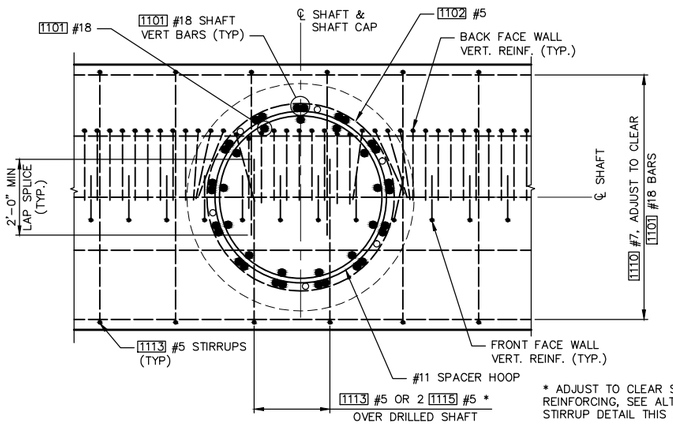

* ADJUST TO CLEAR SHAFT REINFORCING, SEE ALTERNATE STIRRUP DETAIL THIS SHEET

PILE CAP REINFORCING SECTION B

BRW8

ROBERT D. RICHARDSON — STATE OF WASHINGTON — 33999 — REGISTERED PROFESSIONAL ENGINEER

NO.	DATE	BY	APPR.	REVISIONS

Approved By

TRANSPORTATION DESIGN MANAGER — DATE
S. COSTA
PROJECT MANAGER — DATE

E. CLARK — DESIGNED BY — DATE
H. GONSIOR — DRAWN BY — DATE
R. RICHARDSON — CHECKED BY — DATE

City of Bellevue
TRANSPORTATION DEPARTMENT

HDR

NE SPRING BLVD - ZONE 1B
90% DESIGN

WEST BRIDGE
ABUTMENT DETAILS 1 OF 3

SHEET NAME **BRW8**

SHT 107 OF 185

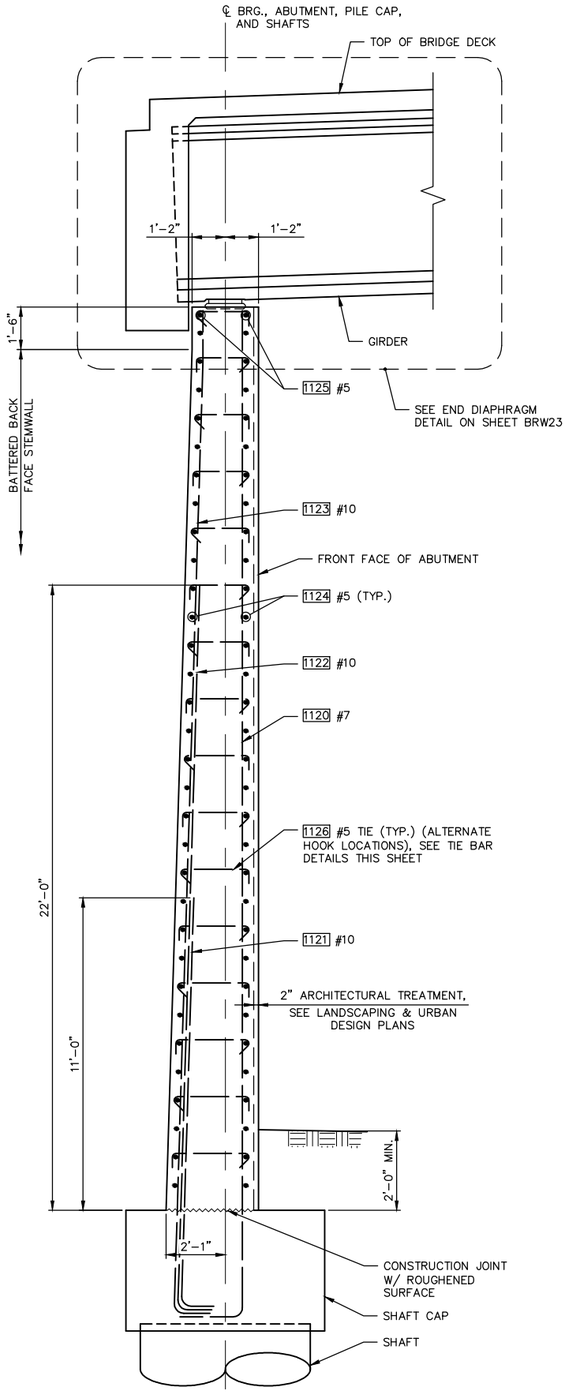

ABUTMENT 1 WALL TYPICAL SECTION
N.T.S.

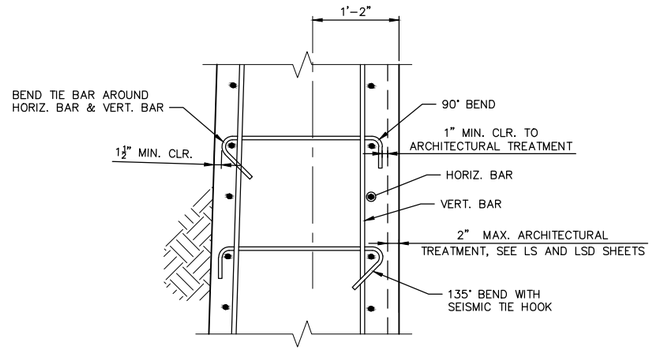

TIE BAR DETAIL
NTS
ALTERNATE 135° HOOK EVERY OTHER TIE BAR

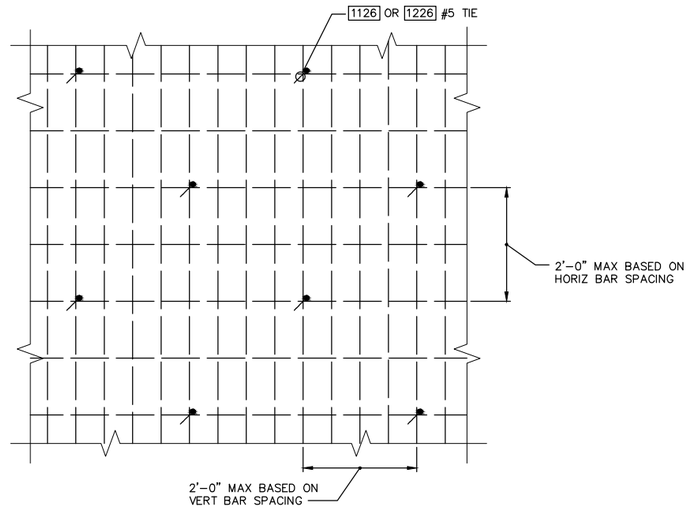

TIE BAR SPACING DETAIL
NTS

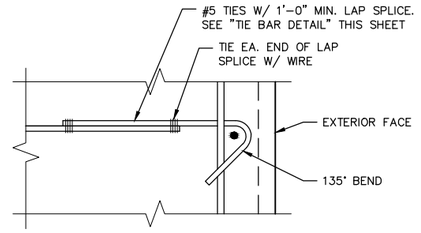

ALTERNATE
TIE BAR DETAIL
NTS
CONSTANT OR VARIABLE WIDTH SECTION.
SEE "TIE BAR DETAIL" THIS SHEET FOR ADDITIONAL INFORMATION.

NOTE:
REINFORCED SOIL ZONE, BRIDGE DRAIN AND BACKFILL TO BE PLACED IN A FUTURE CONTRACT. ABUTMENT IS DESIGNED FOR CONDITIONS SHOWN ON ZONE 1A PLANS.

ROBERT D. RICHARDSON — STATE OF WASHINGTON — 33999 — REGISTERED PROFESSIONAL ENGINEER

NO.	DATE	BY	APPR.	REVISIONS

Approved By

TRANSPORTATION DESIGN MANAGER — DATE
S. COSTA
PROJECT MANAGER — DATE

E. CLARK — DESIGNED BY — DATE
H. GONSIOR — DRAWN BY — DATE
R. RICHARDSON — CHECKED BY — DATE

City of Bellevue
TRANSPORTATION DEPARTMENT

HDR

NE SPRING BLVD - ZONE 1B
90% DESIGN

WEST BRIDGE
ABUTMENT DETAILS 2 OF 3

SHEET NAME BRW9

SHT 108 OF 185

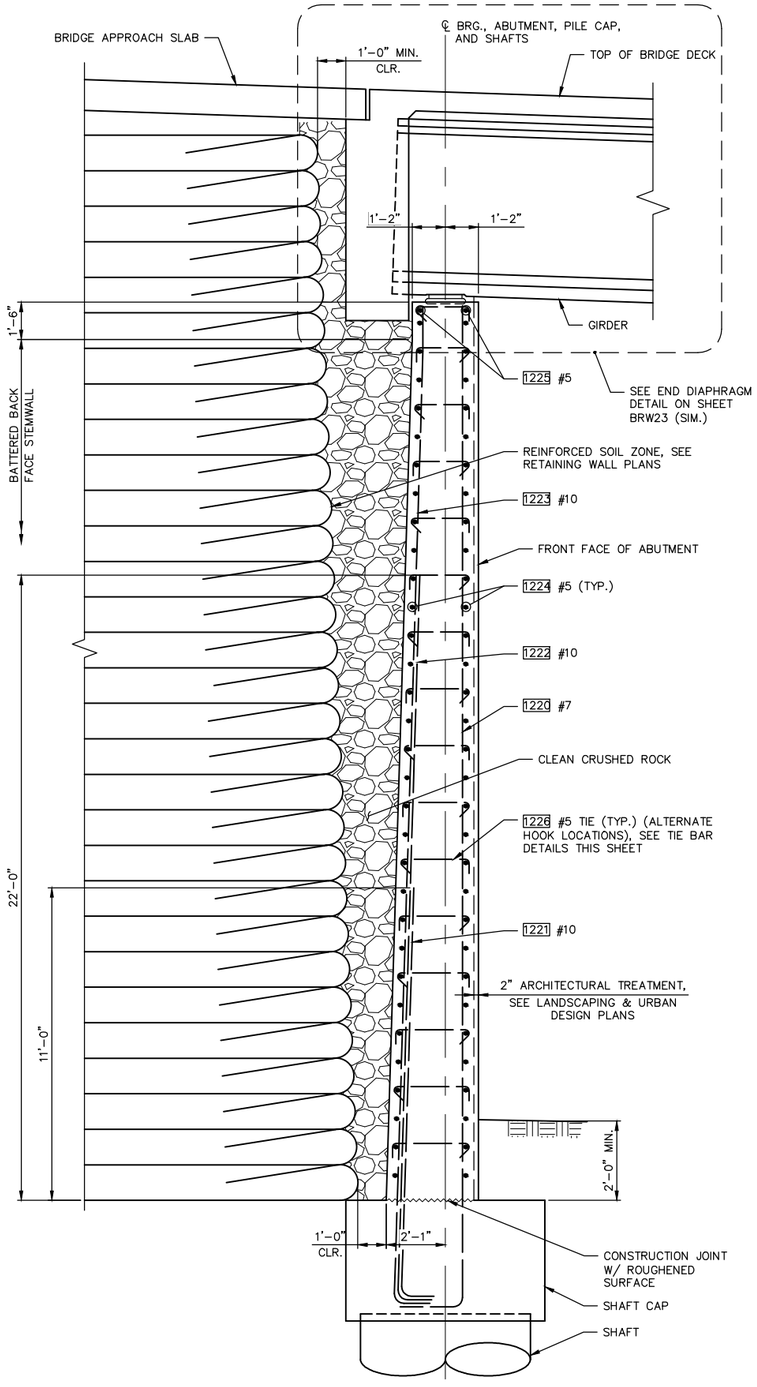

ABUTMENT 2 WALL TYPICAL SECTION

N.T.S.

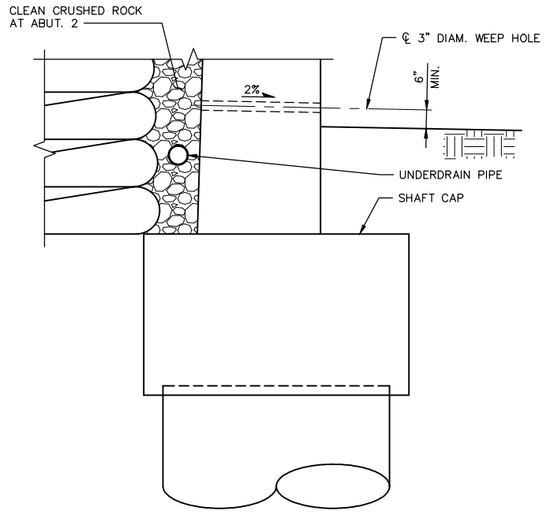

DRAINAGE DETAIL

SEE DR SHEETS FOR ADDITIONAL INFORMATION

ROBERT D. RICHARDSON STATE OF WASHINGTON 33999 REGISTERED PROFESSIONAL ENGINEER

NO.	DATE	BY	APPR.	REVISIONS

Approved By

TRANSPORTATION DESIGN MANAGER — DATE
S. COSTA
PROJECT MANAGER — DATE

E. CLARK — DESIGNED BY — DATE
H. GONSIOR — DRAWN BY — DATE
R. RICHARDSON — CHECKED BY — DATE

City of Bellevue
TRANSPORTATION DEPARTMENT

HDR

NE SPRING BLVD - ZONE 1B
90% DESIGN

WEST BRIDGE
ABUTMENT DETAILS 3 OF 3

SHEET NAME BRW10

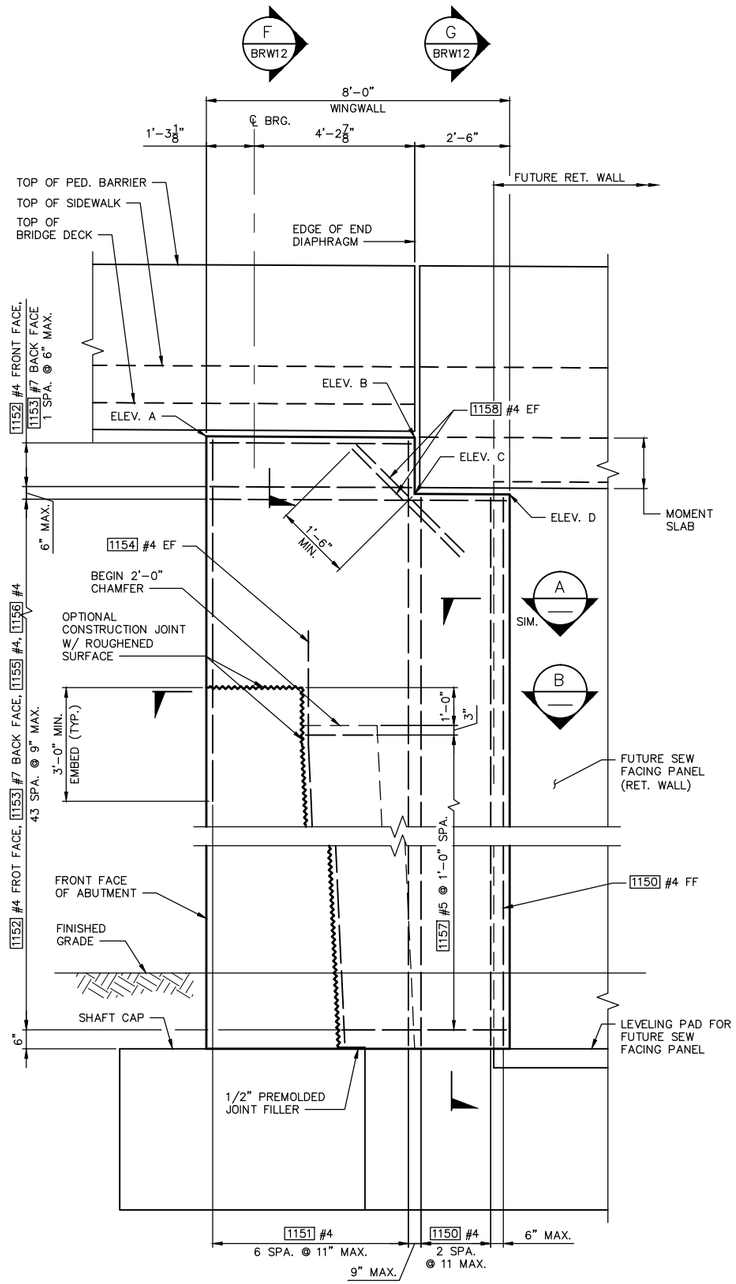

ELEVATION – ABUTMENT 1 NORTH WINGWALL

DIMENSIONS ALONG FACE OF WINGWALL UNLESS NOTED OTHERWISE
(THROW FENCE NOT SHOWN)

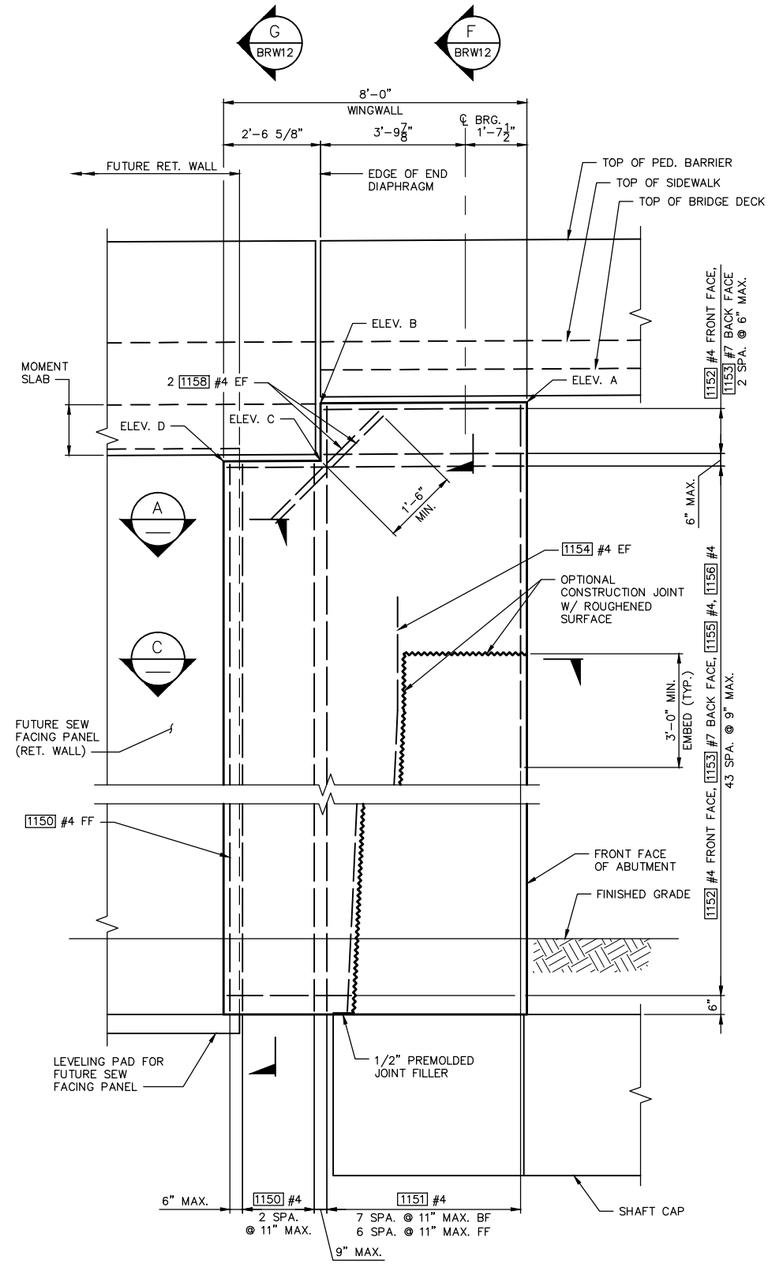

ELEVATION – ABUTMENT 1 SOUTH WINGWALL

DIMENSIONS ALONG FACE OF WINGWALL UNLESS NOTED OTHERWISE
(THROW FENCE NOT SHOWN)

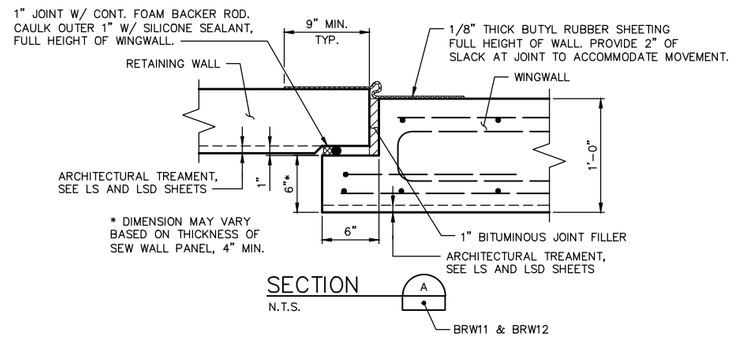

SECTION A

N.T.S.

BRW11 & BRW12

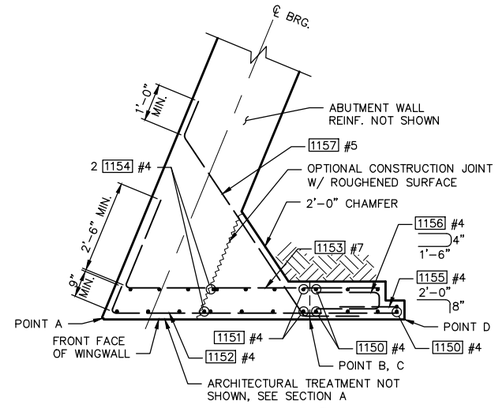

SECTION B

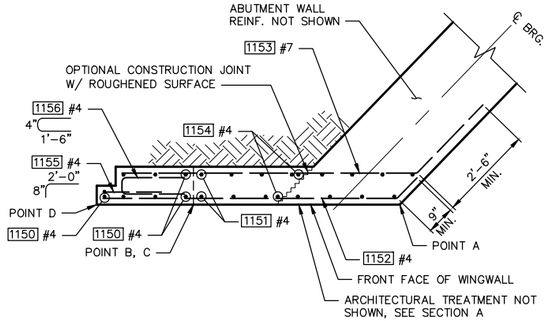

SECTION C

NOTES:
1. THROW FENCE NOT SHOWN FOR CLARITY.
2. TERMINATE 1150 & 1151 BARS AS NEEDED WITH INTERSECTING 1154 BARS.

TOP OF WINGWALL ELEVATIONS				
LOCATION	ELEV. A	ELEV. B	ELEV. C	ELEV. D
NORTH WALL	184.78	184.82	184.59	184.61
SOUTH WALL	185.40	185.44	185.14	185.16

ROBERT D. RICHARDSON STATE OF WASHINGTON 33999 REGISTERED PROFESSIONAL ENGINEER

NO.	DATE	BY	APPR.	REVISIONS

Approved By

TRANSPORTATION DESIGN MANAGER S. COSTA DATE
PROJECT MANAGER DATE

E. CLARK
DESIGNED BY DATE
H. GONSIOR
DRAWN BY DATE
R. RICHARDSON
CHECKED BY DATE

City of Bellevue
TRANSPORTATION DEPARTMENT

HDR

NE SPRING BLVD - ZONE 1B
90% DESIGN

WEST BRIDGE
ABUTMENT 1 WINGWALL DETAILS

SHEET NAME BRW11

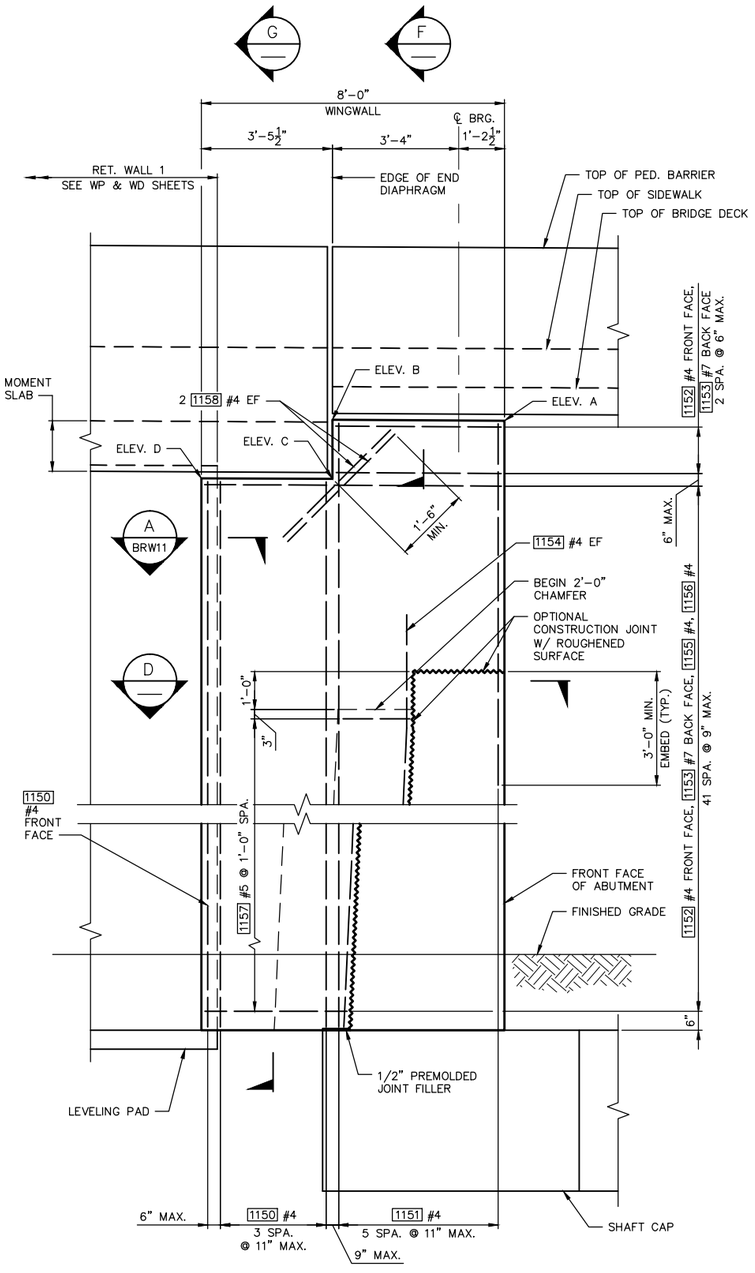

ELEVATION – ABUTMENT 2 NORTH WINGWALL

DIMENSIONS ALONG FACE OF WINGWALL UNLESS NOTED OTHERWISE
(THROW FENCE NOT SHOWN)

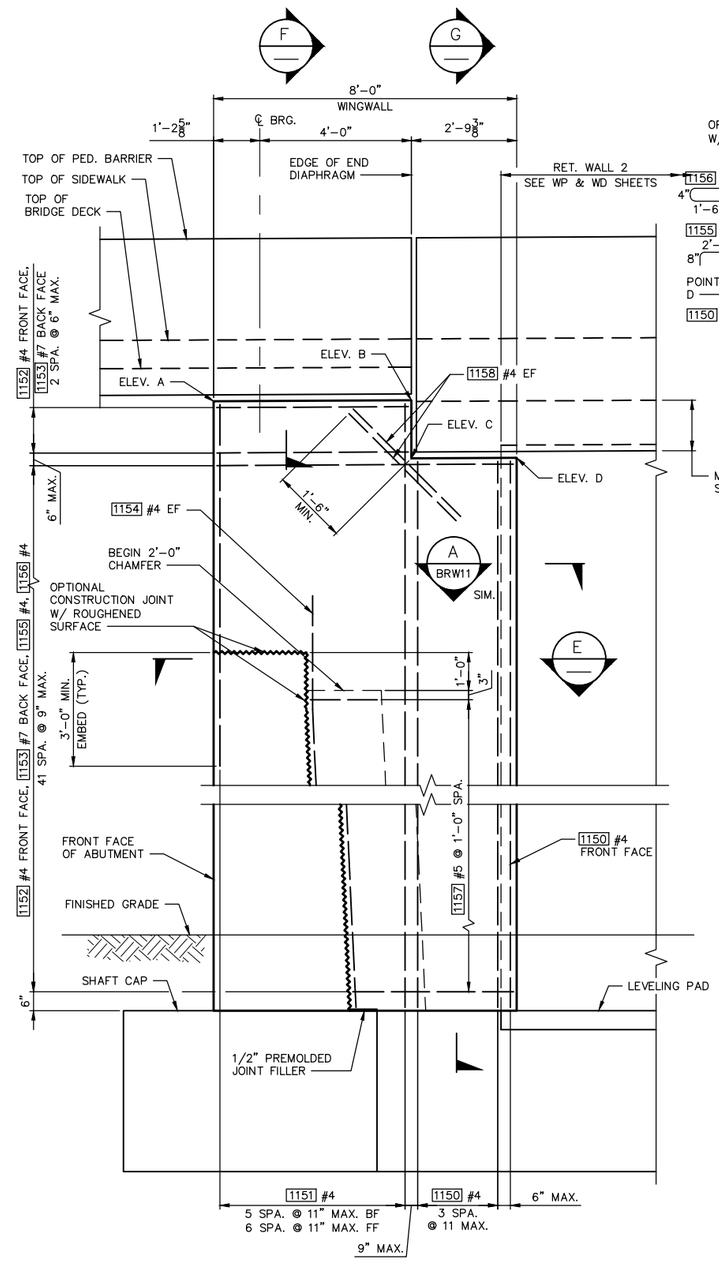

ELEVATION – ABUTMENT 2 SOUTH WINGWALL

DIMENSIONS ALONG FACE OF WINGWALL UNLESS NOTED OTHERWISE
(THROW FENCE NOT SHOWN)

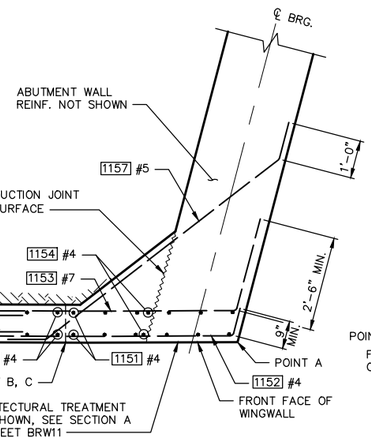

SECTION D

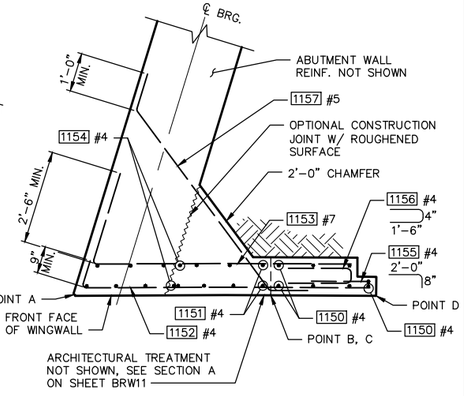

SECTION E

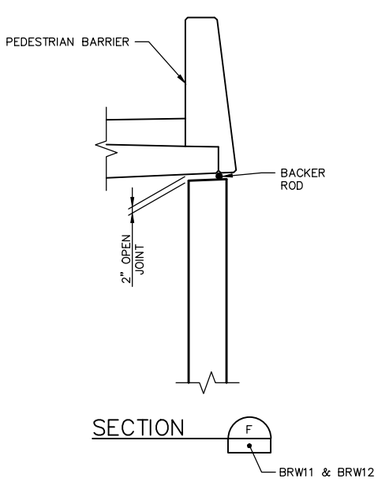

SECTION F

BRW11 & BRW12

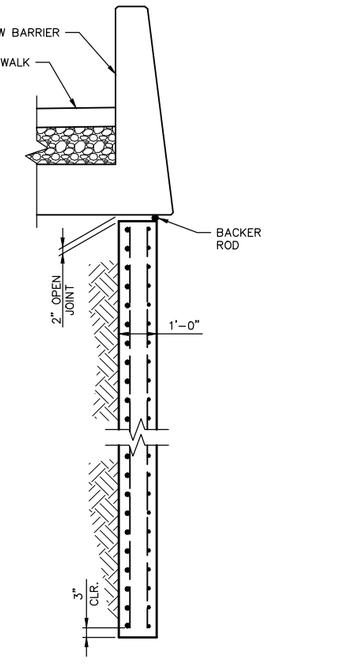

SECTION G

BRW11 & BRW12

NOTES:
1. THROW FENCE NOT SHOWN FOR CLARITY.
2. TERMINATE 1150 & 1151 BARS AS NEEDED WITH INTERSECTING 1154 BARS.

TOP OF WINGWALL ELEVATIONS				
LOCATION	ELEV. A	ELEV. B	ELEV. C	ELEV. D
NORTH WALL	183.54	183.50	183.27	183.23
SOUTH WALL	183.93	183.88	183.57	183.54

ROBERT D. RICHARDSON STATE OF WASHINGTON 33999 REGISTERED PROFESSIONAL ENGINEER

NO.	DATE	BY	APPR.	REVISIONS

Approved By

TRANSPORTATION DESIGN MANAGER — DATE
S. COSTA
PROJECT MANAGER — DATE

E. CLARK — DESIGNED BY — DATE
H. GONSIOR — DRAWN BY — DATE
R. RICHARDSON — CHECKED BY — DATE

City of Bellevue
TRANSPORTATION DEPARTMENT

HDR

NE SPRING BLVD - ZONE 1B
90% DESIGN

WEST BRIDGE
ABUTMENT 2 WINGWALL DETAILS

SHEET NAME BRW12

NO.	DATE	BY	APPR.	REVISIONS

Approved By

TRANSPORTATION DESIGN MANAGER DATE

S. COSTA

PROJECT MANAGER DATE

E. CLARK
DESIGNED BY DATE

H. GONSIOR
DRAWN BY DATE

R. RICHARDSON
CHECKED BY DATE

City of Bellevue
TRANSPORTATION DEPARTMENT

HDR

NE SPRING BLVD - ZONE 1B
90% DESIGN

WEST BRIDGE
WINGWALL CONNECTION DETAILS

SHEET NAME BRW13

SHT 112 OF 185

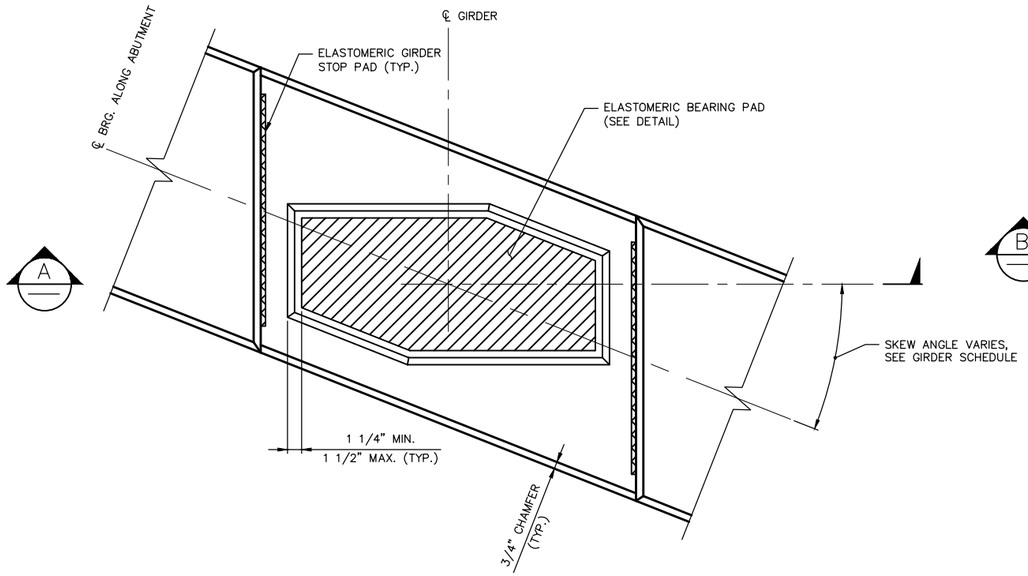

GROUT PAD DETAIL

GIRDER NOT SHOWN FOR CLARITY

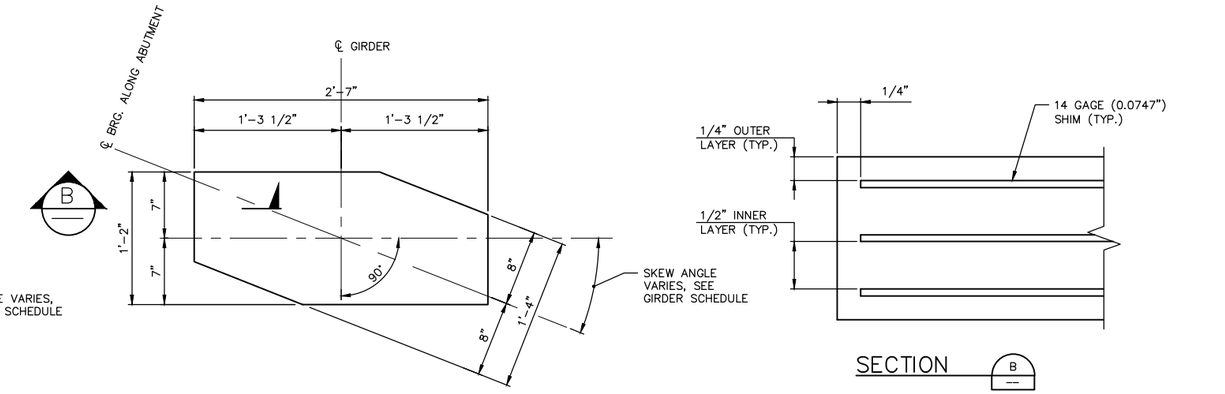

ELASTOMERIC BEARING PAD

LAMINATED ELASTOMERIC BEARING PAD (3 SHIMS)

NOTES:

1. GIRDER STOPS SHALL BE CONSTRUCTED AFTER GIRDER PLACEMENT.
2. THE ELASTOMERIC GIRDER STOP PADS SHALL BE BONDED TO GIRDER STOPS WITH AN APPROVED ADHESIVE.

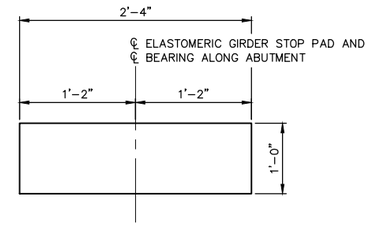

ELASTOMERIC GIRDER STOP PAD

SHEAR MODULUS = 165 PSI

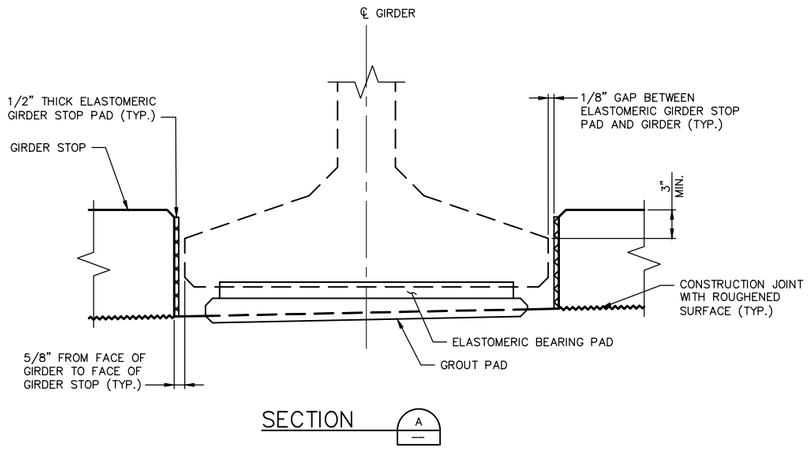

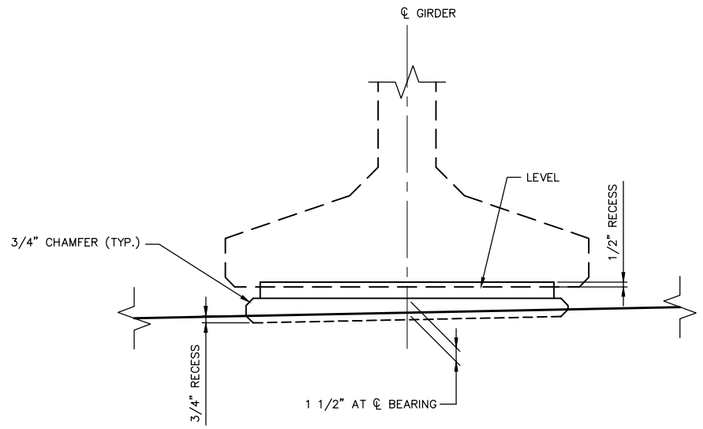

GROUT PAD ELEVATION

BEARING DESIGN TABLE	
AASHTO METHOD B DESIGN	
SERVICE – 1 LIMIT STATE	
DEAD LOAD (DL) REACTION	296 KIPS
LIVE LOAD REACTION (W/O IMPACT)	158 KIPS
UNLOADED HEIGHT	1.72 IN
LOADED HEIGHT (DL)	1.69 IN
SHEAR MODULUS	165 PSI

ROBERT D. RICHARDSON STATE OF WASHINGTON 13009 REGISTERED PROFESSIONAL ENGINEER

NO.	DATE	BY	APPR.	REVISIONS

Approved By

TRANSPORTATION DESIGN MANAGER — DATE
S. COSTA
PROJECT MANAGER — DATE

E. CLARK — DESIGNED BY — DATE
H. GONSIOR — DRAWN BY — DATE
R. RICHARDSON — CHECKED BY — DATE

City of Bellevue
TRANSPORTATION DEPARTMENT

HDR

NE SPRING BLVD - ZONE 1B
90% DESIGN

WEST BRIDGE
BEARING PAD DETAILS

SHEET NAME BRW14

SHT 113 OF 185

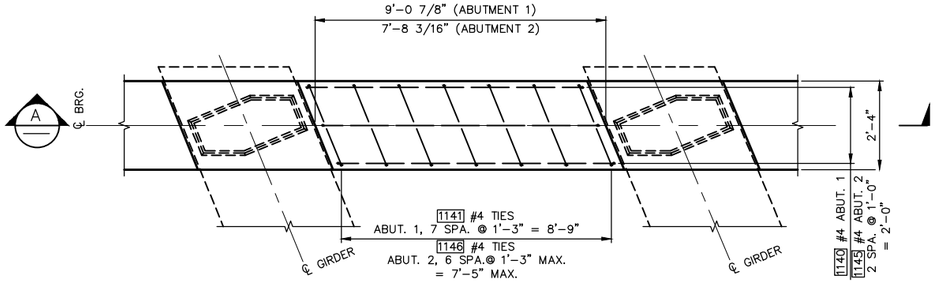

GIRDER STOP DETAIL

ABUTMENT 2 SHOWN.
ABUTMENT 1 SIMILAR.

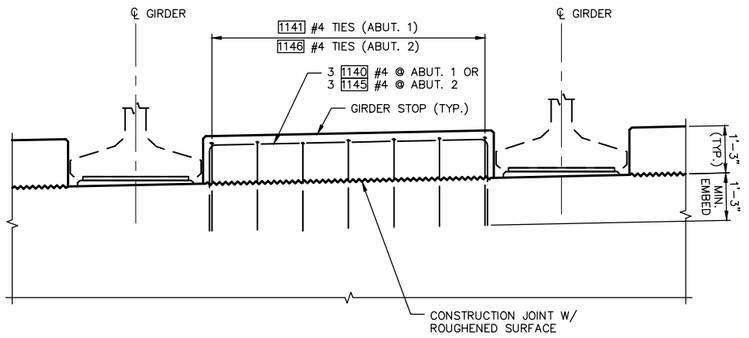

SECTION A

ABUTMENT 2 SHOWN.
ABUTMENT 1 SIMILAR.

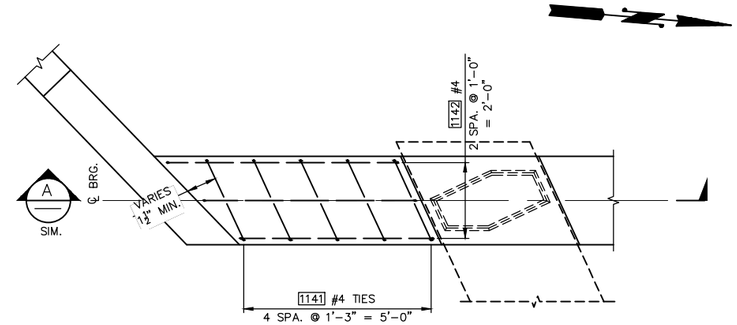

ABUTMENT 1 SOUTH GIRDER STOP DETAIL

(LOOKING BACK ON STATION)

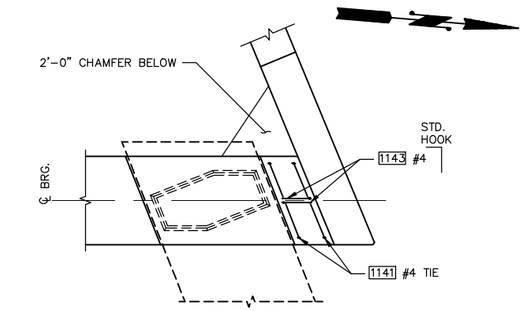

ABUTMENT 1 NORTH GIRDER STOP DETAIL

(LOOKING BACK ON STATION)

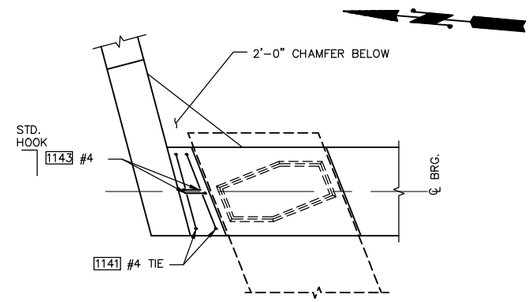

ABUTMENT 2 NORTH GIRDER STOP DETAIL

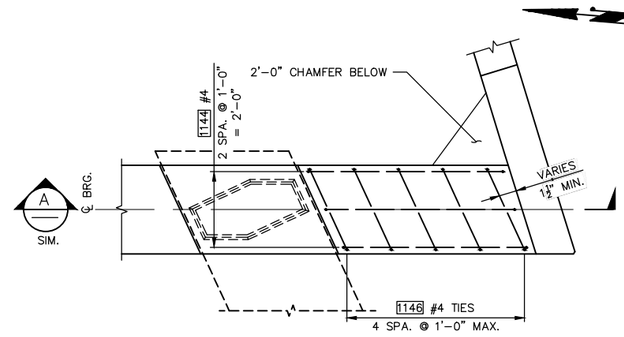

ABUTMENT 2 SOUTH GIRDER STOP DETAIL

NO.	DATE	BY	APPR.	REVISIONS

Approved By

TRANSPORTATION DESIGN MANAGER — DATE
S. COSTA
PROJECT MANAGER — DATE

E. CLARK — DESIGNED BY — DATE
H. GONSIOR — DRAWN BY — DATE
R. RICHARDSON — CHECKED BY — DATE

City of Bellevue
TRANSPORTATION DEPARTMENT

HDR

NE SPRING BLVD - ZONE 1B
90% DESIGN

WEST BRIDGE
GIRDER STOP DETAILS

SHEET NAME BRW15

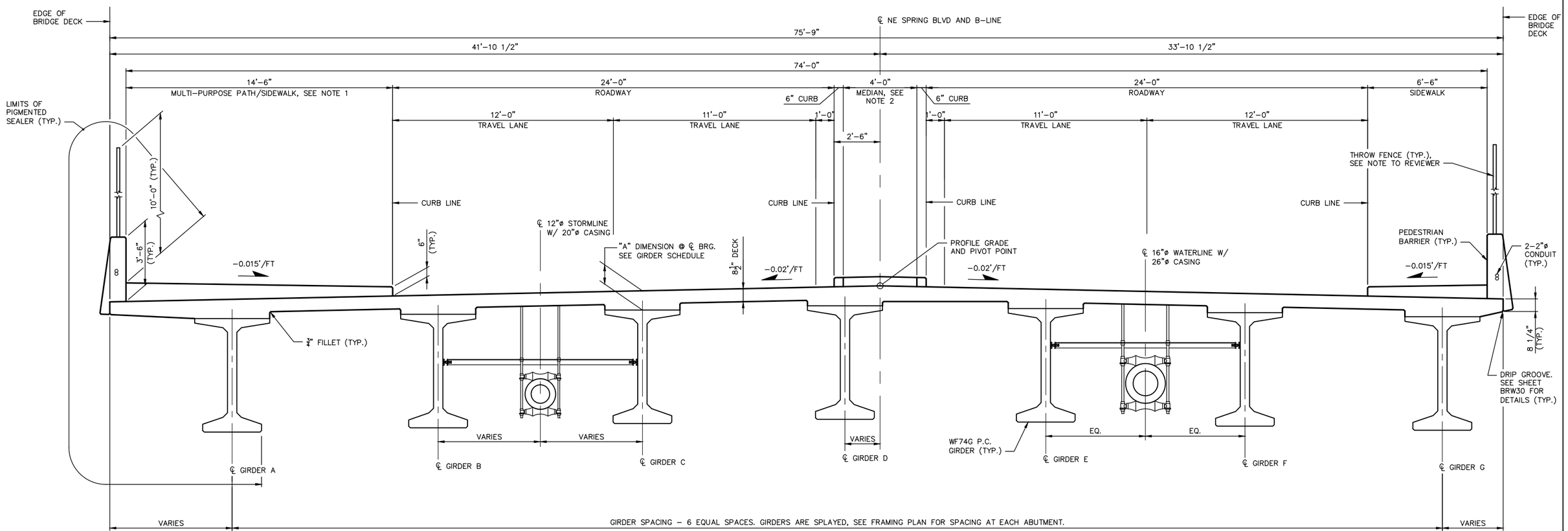

NE SPRING BLVD – WEST BRIDGE TYPICAL SECTION

HORIZONTAL DIMENSIONS ARE NORMAL TO NE SPRING BLVD ℄ UNLESS NOTED OTHERWISE.
(LOOKING AHEAD ON STATION)

NOTES:

1. SEE LS AND LSD SHEETS FOR SCORING AND COLORING DETAILS.
2. PATTERNED CONCRETE MEDIAN. SEE LS AND LSD SHEETS.

NOTE TO REVIEWER:
THROW FENCE MATERIALS, DESIGN, AND CALCULATIONS TO BE DETERMINED PENDING OCTOBER 2015 COORDINATION WITH PLANNING AND TRANSPORTATION DEPARTMENTS.

ROBERT D. RICHARDSON — STATE OF WASHINGTON — 33999 — REGISTERED PROFESSIONAL ENGINEER

NO.	DATE	BY	APPR.	REVISIONS

Approved By

TRANSPORTATION DESIGN MANAGER — DATE
S. COSTA
PROJECT MANAGER — DATE

E. CLARK — DESIGNED BY — DATE
H. GONSIOR — DRAWN BY — DATE
R. RICHARDSON — CHECKED BY — DATE

City of Bellevue
TRANSPORTATION DEPARTMENT

HDR

NE SPRING BLVD - ZONE 1B 90% DESIGN

WEST BRIDGE TYPICAL SECTION

SHEET NAME BRW16

SHT 115 OF 185

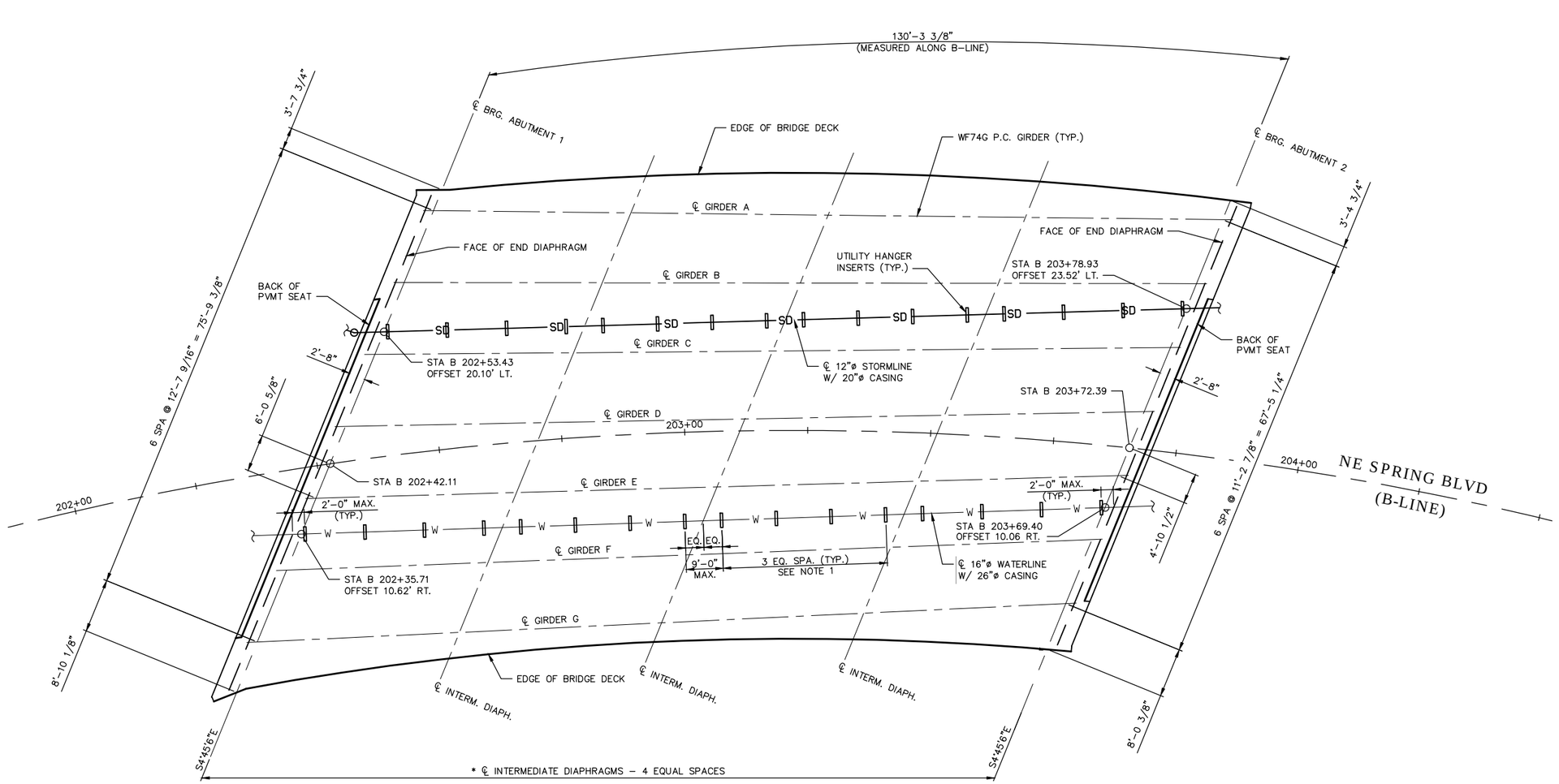

* INTERMEDIATE DIAPHRAGMS ARE PARALLEL TO ℄ ABUTMENTS

FRAMING PLAN

TRANSVERSE DIMENSIONS ARE MEASURED ALONG ℄ BEARING

NOTES:
1. SEE SHEET BRW37 FOR UTILITY HANGER DETAILS.

10 5 0 10 20
SCALE

ROBERT D. RICHARDSON
STATE OF WASHINGTON
33999
REGISTERED
PROFESSIONAL ENGINEER

NO.	DATE	BY	APPR.	REVISIONS

Approved By

TRANSPORTATION DESIGN MANAGER DATE

S. COSTA
PROJECT MANAGER DATE

E. CLARK
DESIGNED BY DATE
H. GONSIOR
DRAWN BY DATE
R. RICHARDSON
CHECKED BY DATE

City of Bellevue
TRANSPORTATION DEPARTMENT

HDR

NE SPRING BLVD - ZONE 1B
90% DESIGN

WEST BRIDGE
FRAMING PLAN

SHEET NAME BRW17

SHT 116 OF 185

DIMENSION 'A' @ ℄ OF BEARING = 12 1/2"

WEST BRIDGE – GIRDER SCHEDULE

SPAN	GIRDER	GIRDER SERIES	END 1 TYPE	END 2 TYPE	INT. DIAPHRAGM TYPE	L (FT-IN)	LD (FT-IN)	LL (FT-IN)	LT (FT-IN)	Θ1 (DEG.)	Θ2 (DEG.)	P1 (FT-IN)	P2 (FT-IN)	PLAN LENGTH (ALONG GIRDER GRADE) (FT-IN)	MIN CONC. COMP. STRENGTH @ 28-DAYS F'C (KSI)	MIN CONC. COMP. STRENGTH @ RELEASE F'CI (KSI)	NUMBER OF STRAIGHT STRANDS	NUMBER OF HARPED STRANDS	NUMBER OF TEMP. STRANDS	LOCATION OF C.G. STRANDS E (IN)	LOCATION OF C.G. STRANDS F℄ (IN)	LOCATION OF C.G. STRANDS Fo (IN)	STRAIGHT STRANDS TO EXTEND END 1	STRAIGHT STRANDS TO EXTEND END 2	DECK SCREED CAMBER C (IN)	D LOWER BOUND @ 40 DAYS (IN)	D UPPER BOUND @ 120 DAYS (IN)	REINFORCEMENT DETAILS V1	V2 (IN)	V3	V4 (IN)	V5	V6 (IN)	H1
1	A	WF74G	A	A	PARTIAL	3'–0"	N/A	6'–2"	6'–2"	111.55	111.55	1'–7 7/8"	1'–7 7/8"	131'–7 1/8"	8.6	7.6	42	21	8	3 3/4	5 1/4	13 1/2	3, 4, 15, 16	3, 4, 15, 16	2 7/8	2 1/2	5 1/2	8	2 1/2	15	6	23	9	7'–5 1/2"
1	B	WF74G	A	A	PARTIAL	3'–0"	N/A	6'–2"	6'–2"	112.13	112.13	1'–8"	1'–8"	132'–1 1/2"	8.3	7.4	40	20	4	3 5/8	5 1/4	13	3, 4, 15, 16	3, 4, 15, 16	2 3/4	2 3/8	5 3/8	8	2 1/2	15	6	23	9	7'–5 1/2"
1	C	WF74G	A	A	PARTIAL	3'–0"	N/A	6'–2"	6'–2"	112.7	112.7	1'–8"	1'–8"	132'–8"	8.3	7.4	40	20	4	3 5/8	5 1/4	13	3, 4, 15, 16	3, 4, 15, 16	3	2 3/8	5 3/8	8	2 1/2	15	6	23	9	7'–5 1/2"
1	D	WF74G	A	A	PARTIAL	3'–0"	N/A	6'–2"	6'–2"	113.27	113.27	1'–8 1/8"	1'–8 1/8"	133'–2 5/8"	8.3	7.4	40	20	4	3 5/8	5 1/4	13	3, 4, 15, 16	3, 4, 15, 16	2 1/4	2 3/8	5 3/8	8	2 1/2	15	6	23	9	7'–5 1/2"
1	E	WF74G	A	A	PARTIAL	3'–0"	N/A	6'–2"	6'–2"	113.83	113.83	1'–8 1/4"	1'–8 1/4"	133'–9 1/2"	7.5	7.5	36	18	6	3 3/8	6	12	3, 4, 15, 16	3, 4, 15, 16	2 3/4	2	4 1/2	8	2 1/2	15	6	23	9	7'–5 1/2"
1	F	WF74G	A	A	PARTIAL	3'–0"	N/A	6'–2"	6'–2"	114.38	114.38	1'–8 1/4"	1'–8 1/4"	134'–4 1/2"	7.5	7.5	36	18	6	3 3/8	6	12	3, 4, 15, 16	3, 4, 15, 16	2 5/8	2	4 1/2	8	2 1/2	15	6	23	9	7'–5 1/2"
1	G	WF74G	A	A	PARTIAL	3'–0"	N/A	6'–2"	6'–2"	114.93	114.93	1'–8 3/8"	1'–8 3/8"	134'–11 5/8"	7.5	7.5	34	16	6	3 1/8	5 3/4	11	3, 4, 15, 16	3, 4, 15, 16	2 3/8	1 7/8	4 1/4	8	2 1/2	15	6	23	9	7'–5 1/2"

DIMENSIONS SHOWN ARE TO THE NEAREST 1/8TH INCH.

GIRDER NOTES

1. PLAN LENGTH SHALL BE INCREASED AS NECESSARY TO COMPENSATE FOR SHORTENING DUE TO PRESTRESS AND SHRINKAGE.
2. ALL PRETENSIONED AND TEMPORARY STRANDS SHALL BE 0.6"ø AASHTO M203 GRADE 270 LOW RELAXATION STRANDS, JACKED TO 202.5 KSI.
3. FOR END TYPE A, CUT ALL STRANDS FLUSH WITH THE GIRDER ENDS AND PAINT WITH AN APPROVED EPOXY RESIN, EXCEPT FOR EXTENDED STRANDS AS SHOWN.
4. THE TOP SURFACE OF THE GIRDER FLANGE SHALL BE TEXTURED IN ACCORDANCE WITH SECTION 6–02.3(25)H OF THE STANDARD SPECIFICATIONS.
5. LIFTING EMBEDMENTS SHALL BE INSTALLED IN ACCORDANCE WITH SECTION 6–02.3(25)L OF THE STANDARD SPECIFICATIONS. REMOVE TO TOP OF GIRDER AFTER ERECTION.
6. FORMS FOR BEARING PAD RECESSES SHALL BE CONSTRUCTED AND FASTENED IN SUCH A MANNER AS TO NOT CAUSE DAMAGE TO THE GIRDER DURING THE STRAND RELEASE OPERATION.
7. TEMPORARY TOP STRANDS SHALL BE EITHER PRETENSIONED OR POST–TENSIONED IN ACCORDANCE WITH SECTION 6–02.3(25)L OF THE STANDARD SPECIFICATIONS AND THE GIRDER DETAILS SHEETS.
8. FOR DIAPHRAGMS, OMIT HOLES AND PLACE INSERTS ON THE INTERIOR FACE OF EXTERIOR GIRDERS. PLACE HOLES AND INSERTS PARALLEL TO DIAPHRAGM CENTERLINE. INSERTS SHALL BE 1"ø MEADOWBURKE MX–3 HI–TENSILE,
   1"ø x 5 1/2" WILLIAMS F22 OPEN FERRULE INSERT, 1"ø x 4 5/8" DAYTON–SUPERIOR F–62 FLARED THIN SLAB FERRULE INSERT.
9. DEFORMED WELDED WIRE REINFORCEMENT MAY BE SUBSTITUTED FOR MILD STEEL REINFORCEMENT IN ACCORDANCE WITH STANDARD SPECIFICATION 6–02.3(25)A.

ROBERT D. RICHARDSON — STATE OF WASHINGTON — 33999 — REGISTERED PROFESSIONAL ENGINEER

NO.	DATE	BY	APPR.	REVISIONS

Approved By

TRANSPORTATION DESIGN MANAGER — DATE
S. COSTA
PROJECT MANAGER — DATE

E. CLARK — DESIGNED BY — DATE
H. GONSIOR — DRAWN BY — DATE
R. RICHARDSON — CHECKED BY — DATE

City of Bellevue
TRANSPORTATION DEPARTMENT

HDR

NE SPRING BLVD - ZONE 1B
90% DESIGN

WEST BRIDGE
WF74G GIRDER SCHEDULE AND NOTES

SHEET NAME **BRW18**

90% SUBMITTAL NOT FOR CONSTRUCTION

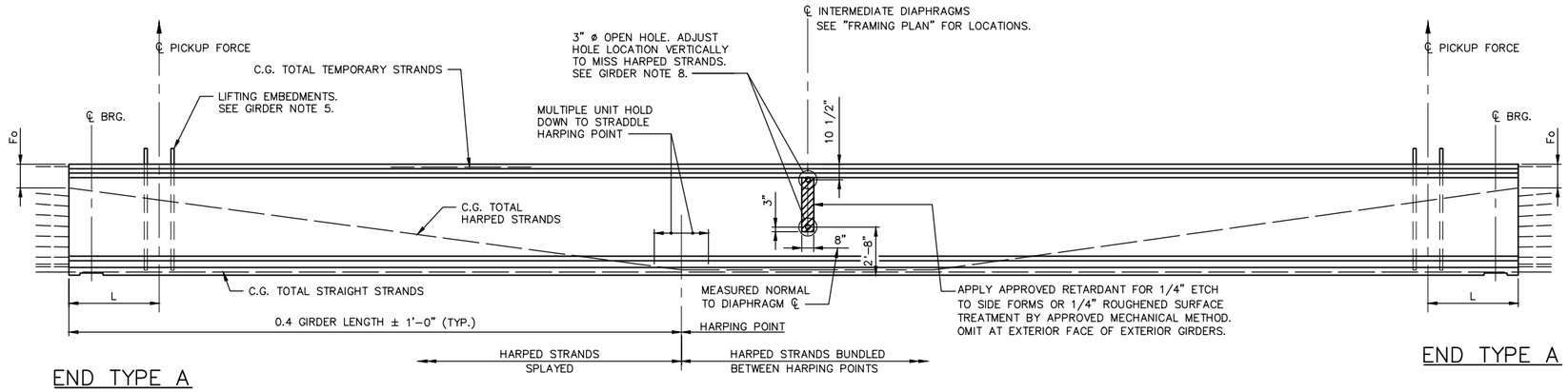

GIRDER ELEVATION
N.T.S.

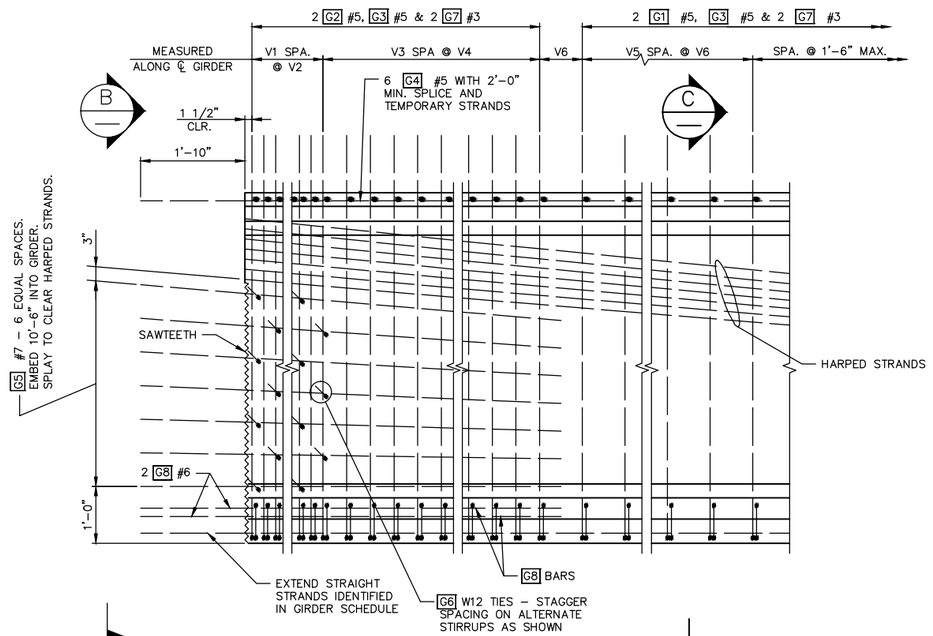

TYPICAL END ELEVATION

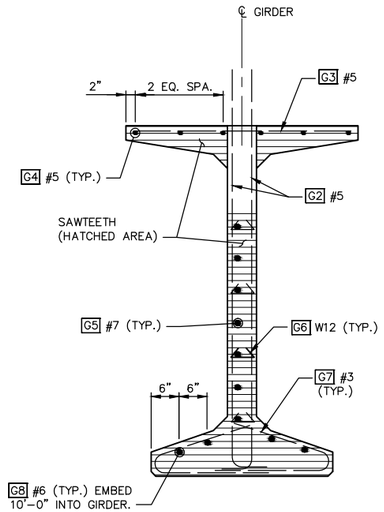

VIEW B
N.T.S.
(STRANDS
NOT SHOWN)

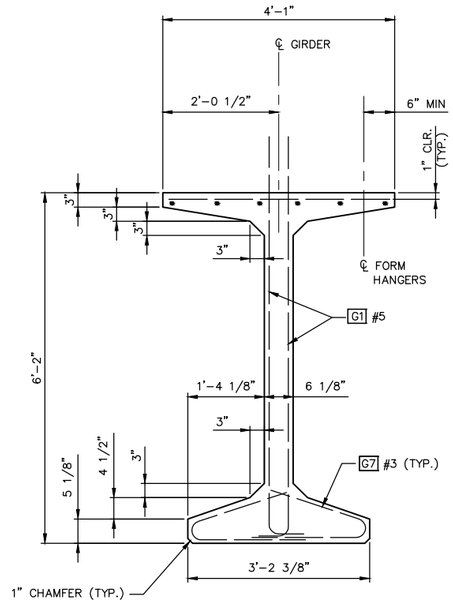

SECTION C
N.T.S.
(STRANDS
NOT SHOWN)

BENDING DIAGRAM (ALL DIMENSIONS ARE OUT TO OUT)

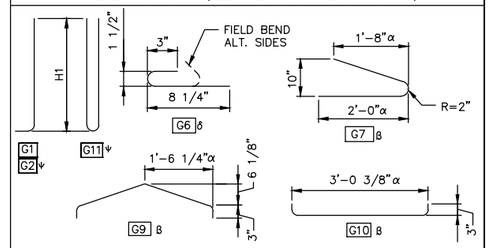

α – VARIES FOR SKEWED ENDS.
δ – #3 OR #4 MAY BE SUBSTITUTED. FIELD BENDING IS OPTIONAL.
8 – PAIRS OF G7 BARS, OR G9 AND G10 BARS, MAY BE USED INTERCHANGEABLY AS BOTTOM FLANGE TIES.

ψ – 1 G11 MAY BE SUBSTITUTED FOR 2 G2 WITHIN THE V1 SPA. @ V2.

NOTE: FOR DIMENSION "A", SEE "GIRDER SCHEDULE"

ROBERT D. RICHARDSON
STATE OF WASHINGTON
33999
REGISTERED
PROFESSIONAL ENGINEER

NO.	DATE	BY	APPR.	REVISIONS

Approved By

TRANSPORTATION DESIGN MANAGER S. COSTA DATE
PROJECT MANAGER DATE

E. CLARK
DESIGNED BY H. GONSIOR DATE
DRAWN BY R. RICHARDSON DATE
CHECKED BY DATE

City of Bellevue
TRANSPORTATION DEPARTMENT

HDR

NE SPRING BLVD - ZONE 1B
90% DESIGN

WEST BRIDGE
WF74G GIRDER DETAILS 1 OF 3

SHEET NAME BRW19

SHT 118 OF 185

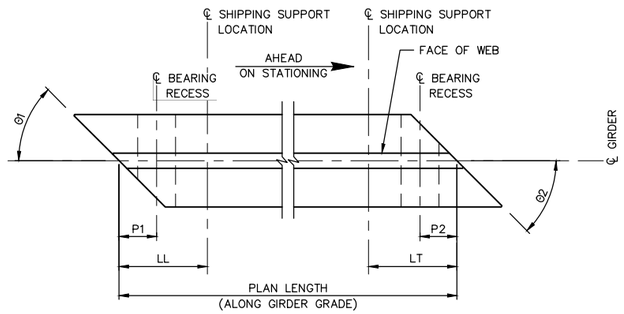

GIRDER SCHEDULE LEGEND

LL AND LT ARE SHIPPING SUPPORT LOCATIONS AT LEADING AND TRAILING ENDS, RESPECTIVELY.

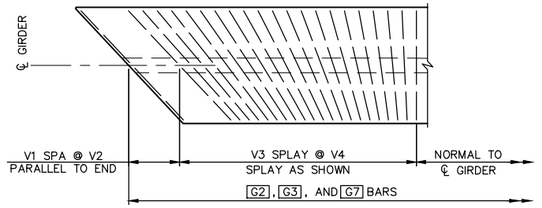

TRANSVERSE REINFORCING SKEWED ENDS

LENGTH OF G3 AND G7 VARY WITH SKEW. ONLY TRANSVERSE REINFORCEMENT SHOWN.

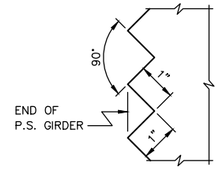

SAWTOOTH DETAILS

SAWTEETH ARE FULL WIDTH – USE SAWTOOTH KEYS FROM BOTTOM OF BOTTOM FLANGE TO BOTTOM OF LOWEST HARPED STRAND AS WELL AS TOP FLANGE ADJACENT TO HARPED STRANDS.

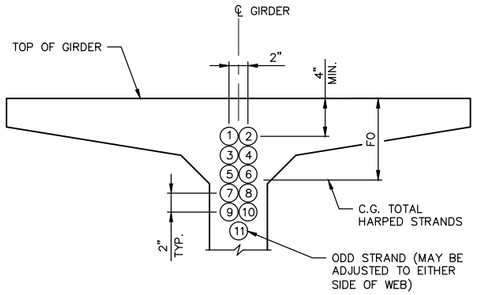

STRAND PATTERN AT GIRDER END

HARPED STRAND LOCATION SEQUENCE SHALL BE AS SHOWN (1), (2), ETC.

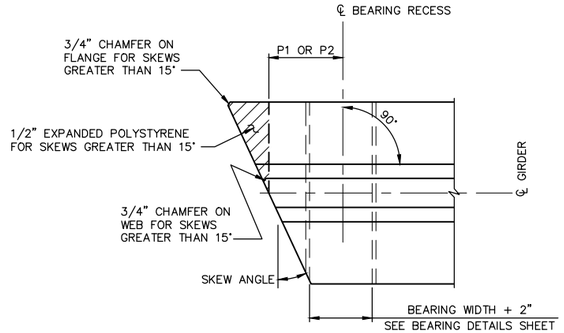

PLAN

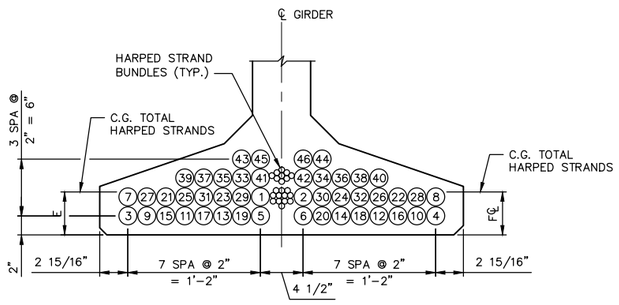

STRAND PATTERN AT ℄ SPAN

STRAIGHT STRAND LOCATION SEQUENCE SHALL BE AS SHOWN (1), (2), ETC.

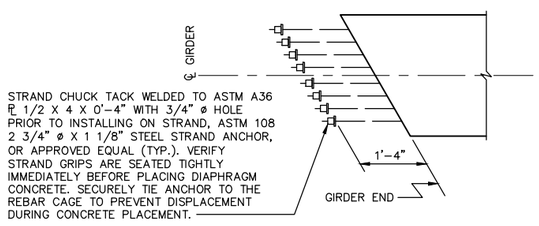

STRAND EXTENSION DETAIL

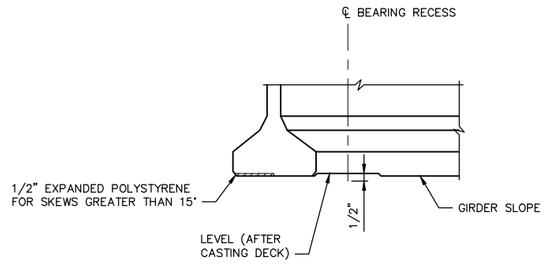

ELEVATION

BEARING RECESS AND BOTTOM FLANGE SPALL PROTECTION DETAIL

ROBERT D. RICHARDSON — STATE OF WASHINGTON — 33999 — REGISTERED PROFESSIONAL ENGINEER

NO.	DATE	BY	APPR.	REVISIONS

Approved By

TRANSPORTATION DESIGN MANAGER — DATE
S. COSTA
PROJECT MANAGER — DATE

E. CLARK — DESIGNED BY — DATE
H. GONSIOR — DRAWN BY — DATE
R. RICHARDSON — CHECKED BY — DATE

City of Bellevue
TRANSPORTATION DEPARTMENT

HDR

NE SPRING BLVD - ZONE 1B
90% DESIGN

WEST BRIDGE
WF74G GIRDER DETAILS 2 OF 3

SHEET NAME BRW20

SHT 119 OF 185

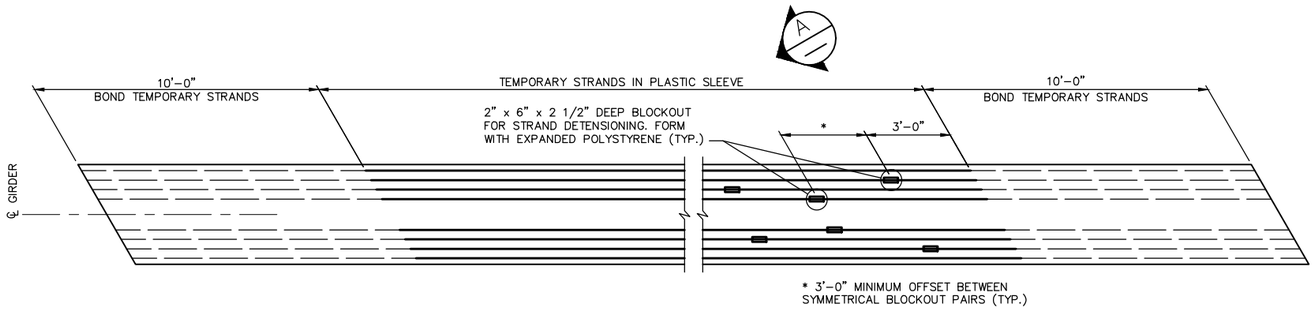

PLAN
PRE-TENSIONED TEMPORARY
TOP STRANDS ALTERNATE

SEE "GIRDER SCHEDULE" FOR NUMBER OF TEMPORARY STRANDS REQUIRED.

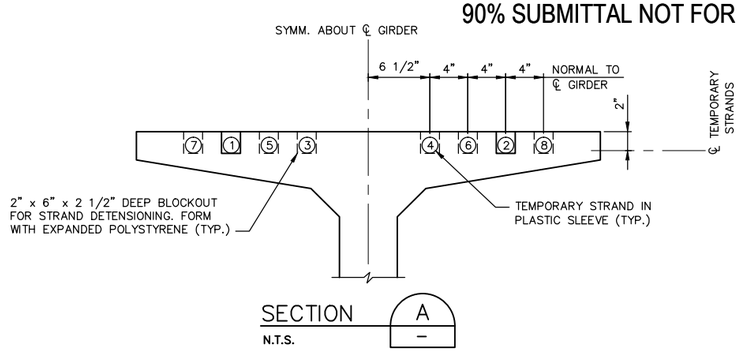

SECTION A
N.T.S.

NOTES:
1. TEMPORARY STRANDS LOCATION SEQUENCE SHALL BE AS SHOWN (1), (2), ETC.

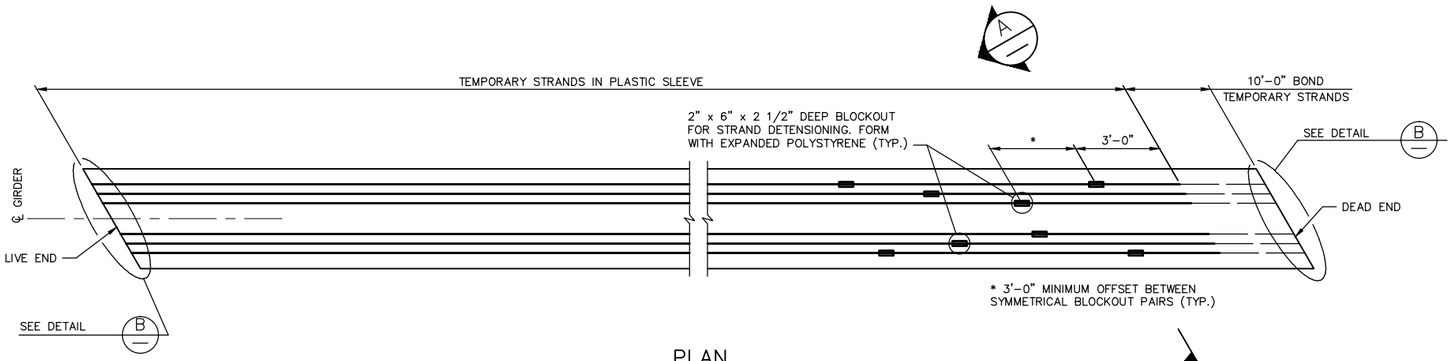

PLAN
POST-TENSIONED TEMPORARY
TOP STRANDS ALTERNATE

SEE "GIRDER SCHEDULE" FOR NUMBER OF TEMPORARY STRANDS REQUIRED.

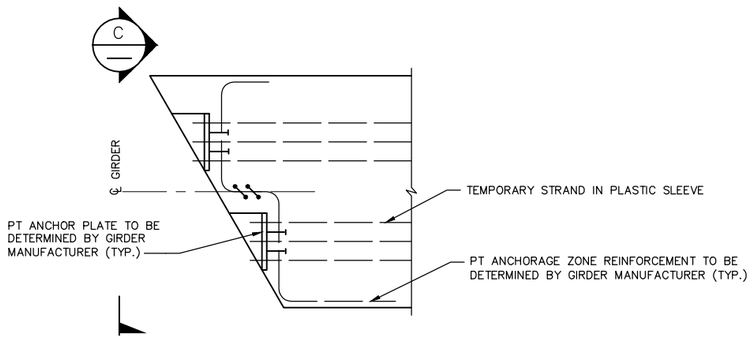

DETAIL B
N.T.S.
(LIVE END SHOWN.
DEAD END SIMILAR.)

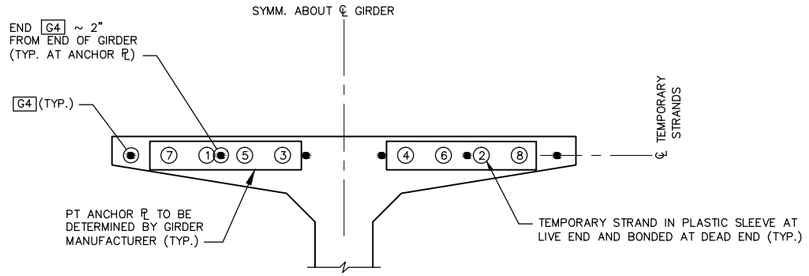

VIEW C
N.T.S.

TEMPORARY STRAND LOCATION SEQUENCE
SHALL BE AS SHOWN (1), (2), ETC.

ROBERT D. RICHARDSON
STATE OF WASHINGTON
33999
REGISTERED
PROFESSIONAL ENGINEER

NO.	DATE	BY	APPR.	REVISIONS

Approved By

TRANSPORTATION DESIGN MANAGER — DATE
S. COSTA
PROJECT MANAGER — DATE

E. CLARK
DESIGNED BY — DATE
H. GONSIOR
DRAWN BY — DATE
R. RICHARDSON
CHECKED BY — DATE

City of Bellevue
TRANSPORTATION DEPARTMENT

HDR

NE SPRING BLVD - ZONE 1B
90% DESIGN

WEST BRIDGE
WF74G GIRDER DETAILS 3 OF 3

SHEET NAME BRW21

SHT 120 OF 185

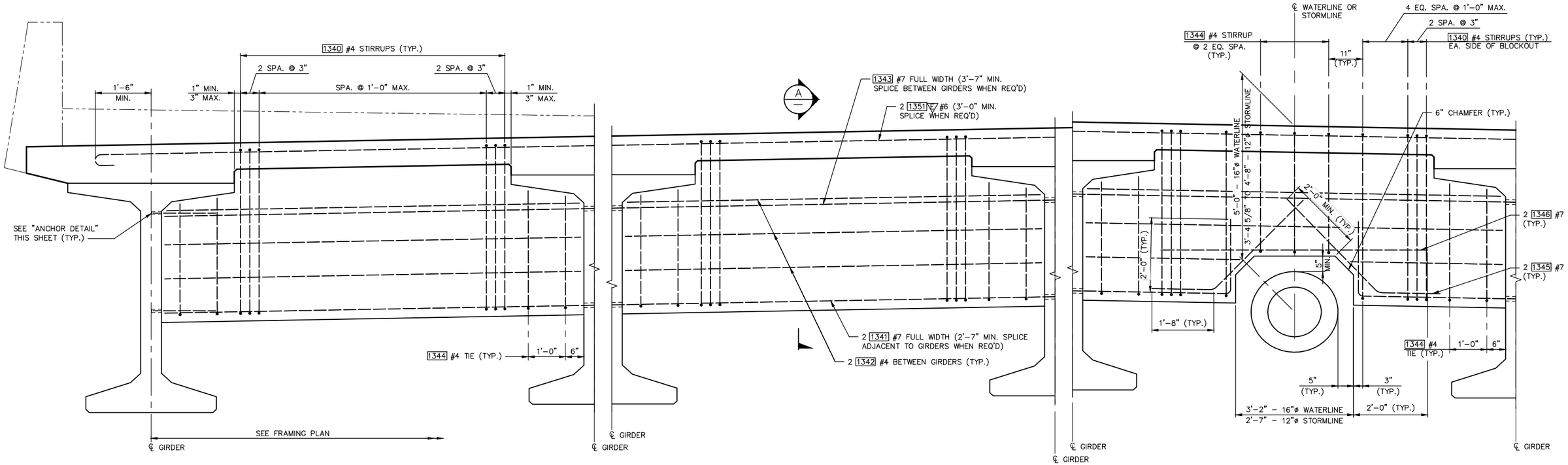

ELEVATION – INTERMEDIATE DIAPHRAGM

SCALE: 3/4" = 1'-0"
(LOOKING AHEAD ON STATION. HORIZONTAL DIMENSIONS ARE ALONG DIAPHRAGM)
(SEE FRAMING PLAN FOR LOCATION OF DIAPHRAGMS)

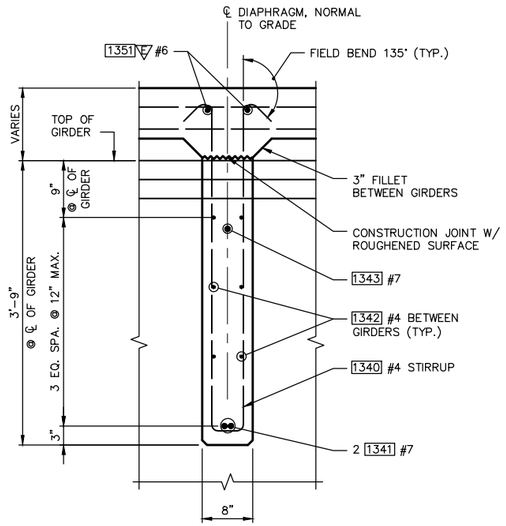

SECTION A—A

SCALE: 1" = 1'-0"

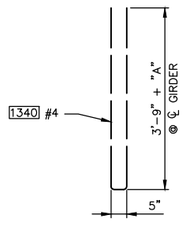

STIRRUP DETAIL

N.T.S.
(SEE GIRDER SCHEDULE FOR DIMENSION "A")

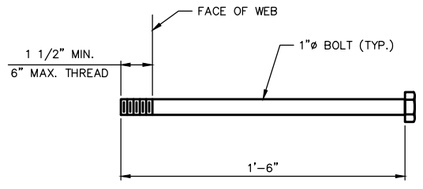

ANCHOR DETAIL

N.T.S.
ASTM A307

NOTES:

1. GIRDERS SHALL BE HELD RIGIDLY IN PLACE WHEN DIAPHRAGMS ARE PLACED.
2. IT MAY BE NECESSARY TO THREAD #7 REINFORCING BARS THROUGH HOLES IN GIRDERS PRIOR TO PLACING EXTERIOR GIRDERS.
3. CUT/RELEASE GIRDER TEMPORARY STRANDS BEFORE CASTING DIAPHRAGM. SEE TEMPORARY STRAND CUTTING SEQUENCE ON SHEET BRW3.
4. LONGITUDINAL DIMENSIONS ARE NORMAL TO SKEW.
5. FOR CONCRETE PLACEMENT PROCEDURE, SEE CONSTRUCTION SEQUENCE ON SHEET BRW3.

ROBERT D. RICHARDSON — STATE OF WASHINGTON — 33999 — REGISTERED PROFESSIONAL ENGINEER

NO.	DATE	BY	APPR.	REVISIONS

Approved By

TRANSPORTATION DESIGN MANAGER — DATE
S. COSTA
PROJECT MANAGER — DATE

E. CLARK — DESIGNED BY — DATE
H. GONSIOR — DRAWN BY — DATE
R. RICHARDSON — CHECKED BY — DATE

City of Bellevue
TRANSPORTATION DEPARTMENT

HDR

NE SPRING BLVD - ZONE 1B
90% DESIGN

WEST BRIDGE
INTERMEDIATE DIAPHRAGM DETAILS

SHEET NAME **BRW22**

SHT 121 OF 185

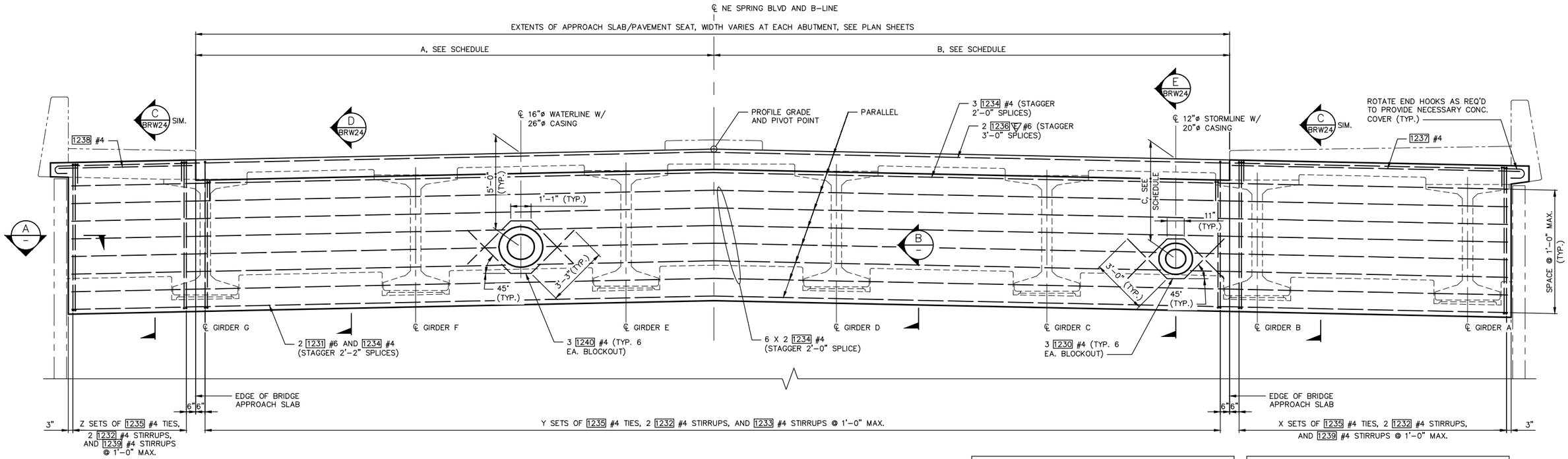

ELEVATION – END DIAPHRAGM

HORIZONTAL DIMENSIONS ARE MEASURED ALONG BACK FACE OF PAVEMENT SEAT
ABUTMENT 2 SHOWN, ABUTMENT 1 SIMILAR
(LOOKING BACK ON STATION)

DIMENSION SCHEDULE			
LOCATION	A	B	C
ABUT. 1	29'-5 1/4"	29'-11 1/2"	5'-3 5/8"
ABUT. 2	26'-7"	26'-5 3/4"	2'-9"

NO. OF REINFORCING			
LOCATION	X	Y	Z
ABUT. 1	20	60	12
ABUT. 2	17	53	9

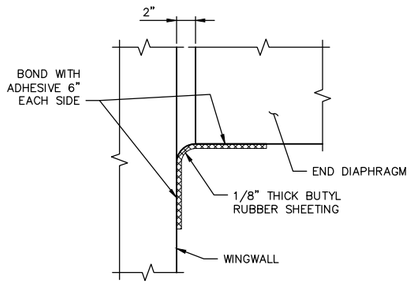

SECTION A

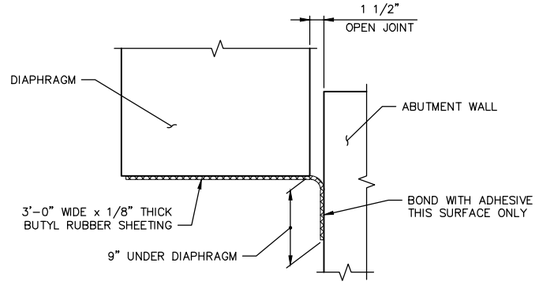

SECTION B

NOTES:

1. GIRDERS SHALL BE HELD RIGIDLY IN PLACE WHEN DIAPHRAGMS ARE PLACED.
2. CUT/RELEASE GIRDER TEMPORARY STRANDS BEFORE CASTING DIAPHRAGM. SEE TEMPORARY STRAND CUTTING SEQUENCE.
3. EXTENDED STRANDS AND GIRDER REINFORCING NOT SHOWN FOR CLARITY.

ROBERT D. RICHARDSON STATE OF WASHINGTON 33999 REGISTERED PROFESSIONAL ENGINEER

NO.	DATE	BY	APPR.	REVISIONS

Approved By

TRANSPORTATION DESIGN MANAGER DATE
S. COSTA
PROJECT MANAGER DATE

E. CLARK
DESIGNED BY DATE
H. GONSIOR
DRAWN BY DATE
R. RICHARDSON
CHECKED BY DATE

City of Bellevue
TRANSPORTATION DEPARTMENT

HDR

NE SPRING BLVD - ZONE 1B
90% DESIGN

WEST BRIDGE
END DIAPHRAGM DETAILS 1 OF 2

SHEET NAME BRW23

SHT 122 OF 185

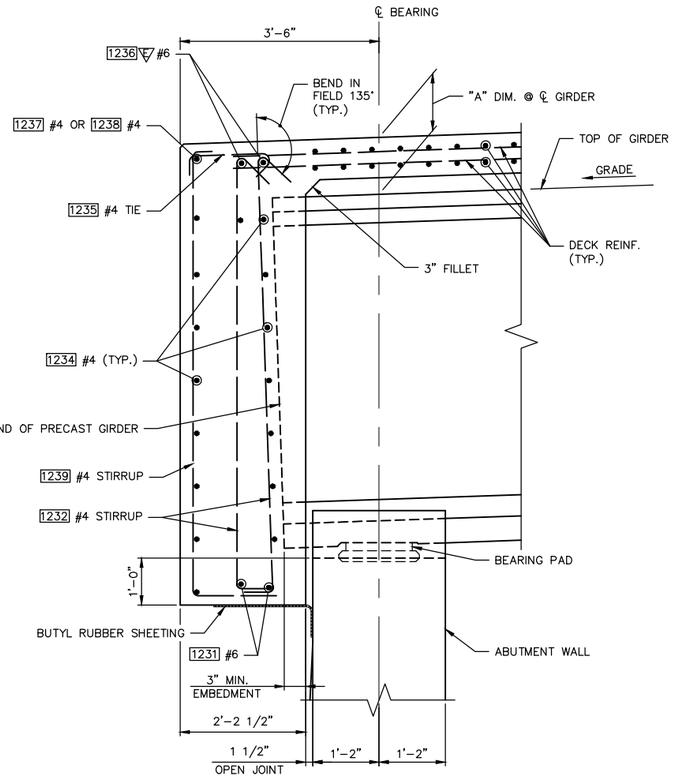

SECTION C BRW23

SIDEWALK NOT SHOWN

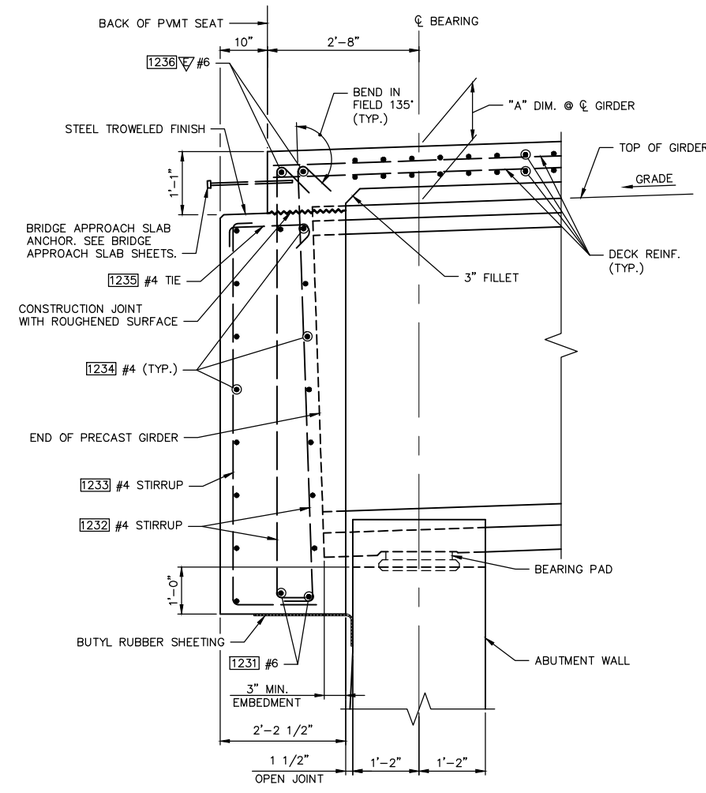

SECTION D BRW23

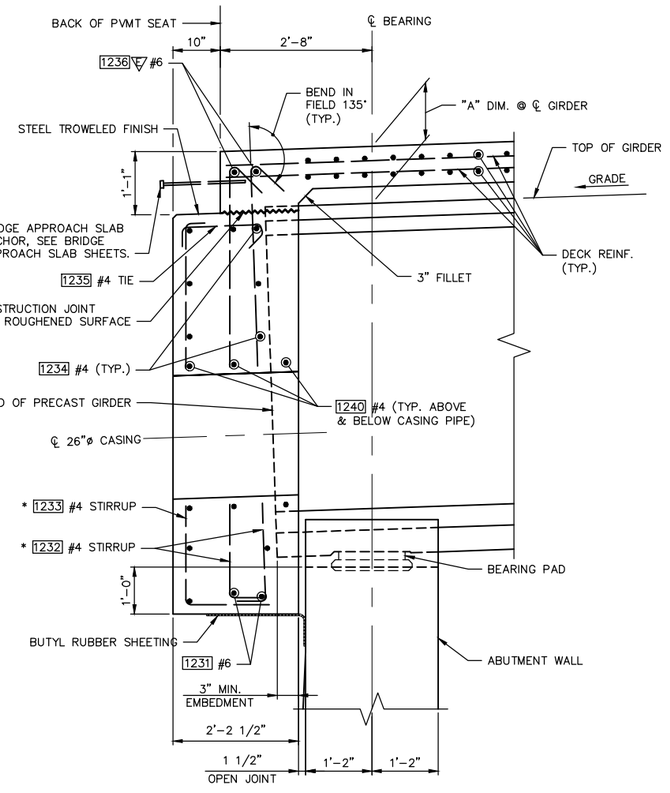

SECTION E BRW23

* CUT REINFORCING TO CLEAR BLOCKOUT. MAINTAIN 1 1/2" CLR. AT BLOCKOUT (TYP.)

NOTES:

1. SEE GIRDER SCHEDULE FOR DIMENSION "A".
2. LONGITUDINAL DIMENSIONS ARE NORMAL TO ABUTMENT WALL.

ROBERT D. RICHARDSON STATE OF WASHINGTON 33999 REGISTERED PROFESSIONAL ENGINEER

NO.	DATE	BY	APPR.	REVISIONS

Approved By

TRANSPORTATION DESIGN MANAGER DATE

S. COSTA

PROJECT MANAGER DATE

E. CLARK
DESIGNED BY DATE
H. GONSIOR
DRAWN BY DATE
R. RICHARDSON
CHECKED BY DATE

City of Bellevue
TRANSPORTATION DEPARTMENT

HDR

NE SPRING BLVD - ZONE 1B
90% DESIGN

WEST BRIDGE
END DIAPHRAGM DETAILS 2 OF 2

SHEET NAME **BRW24**

SHT 123 OF 185

OVERHANG BAR LENGTHS	
BAR	LENGTH
1303	133'–0"
	119'–0"
	106'–0"
	91'–0"
	73'–0"
	48'–0"
1309	45'–0"
	33'–0"
	25'–0"
	19'–0"
	13'–0"
	8'–0"

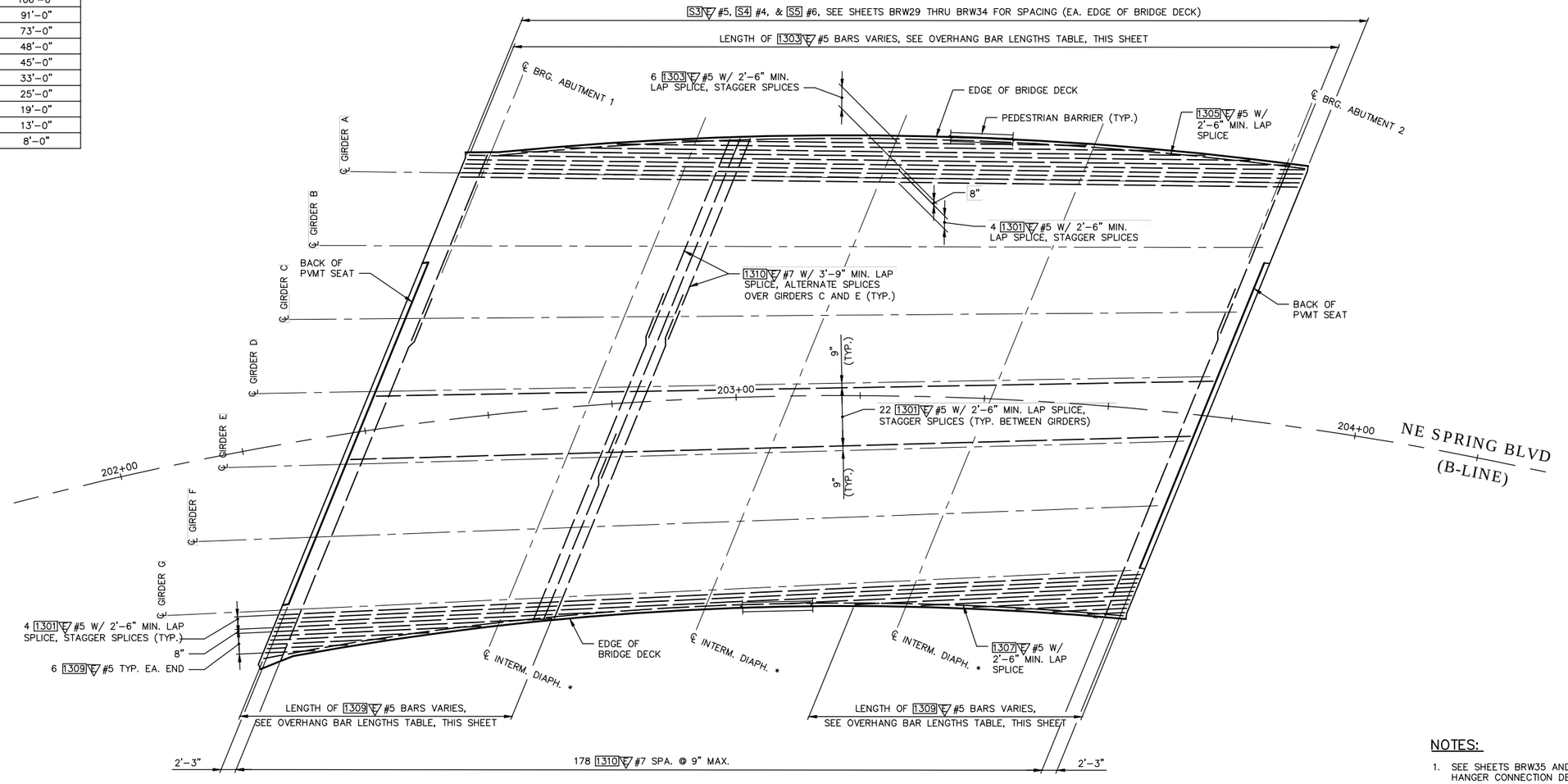

* SEE SHEET BRW22 FOR INTERMEDIATE DIAPHRAGM REINFORCING.

BRIDGE DECK REINFORCEMENT PLAN – BOTTOM

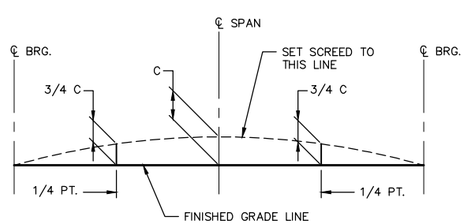

SCREED SETTING DIMENSIONS

FOR DIMENSION "C" SEE GIRDER SCHEDULE

NOTES:

1. SEE SHEETS BRW35 AND BRW36 FOR UTILITY HANGER CONNECTION DETAILS.

SCALE 10 5 0 10 20

ROBERT D. RICHARDSON STATE OF WASHINGTON 13999 REGISTERED PROFESSIONAL ENGINEER

NO.	DATE	BY	APPR.	REVISIONS

Approved By

TRANSPORTATION DESIGN MANAGER S. COSTA DATE

PROJECT MANAGER DATE

E. CLARK
DESIGNED BY DATE
H. GONSIOR
DRAWN BY DATE
R. RICHARDSON
CHECKED BY DATE

City of Bellevue
TRANSPORTATION DEPARTMENT

NE SPRING BLVD - ZONE 1B
90% DESIGN

WEST BRIDGE
BRIDGE DECK REINFORCEMENT PLAN - BOT

SHEET NAME BRW25

SHT 124 OF 185

OVERHANG BAR LENGTHS	
BAR	LENGTH
1300	131'–0"
	108'–0"
	85'–0"
	52'–0"
1304	55'–0"
	35'–0"
	23'–0"
	14'–0"
	6'–0"

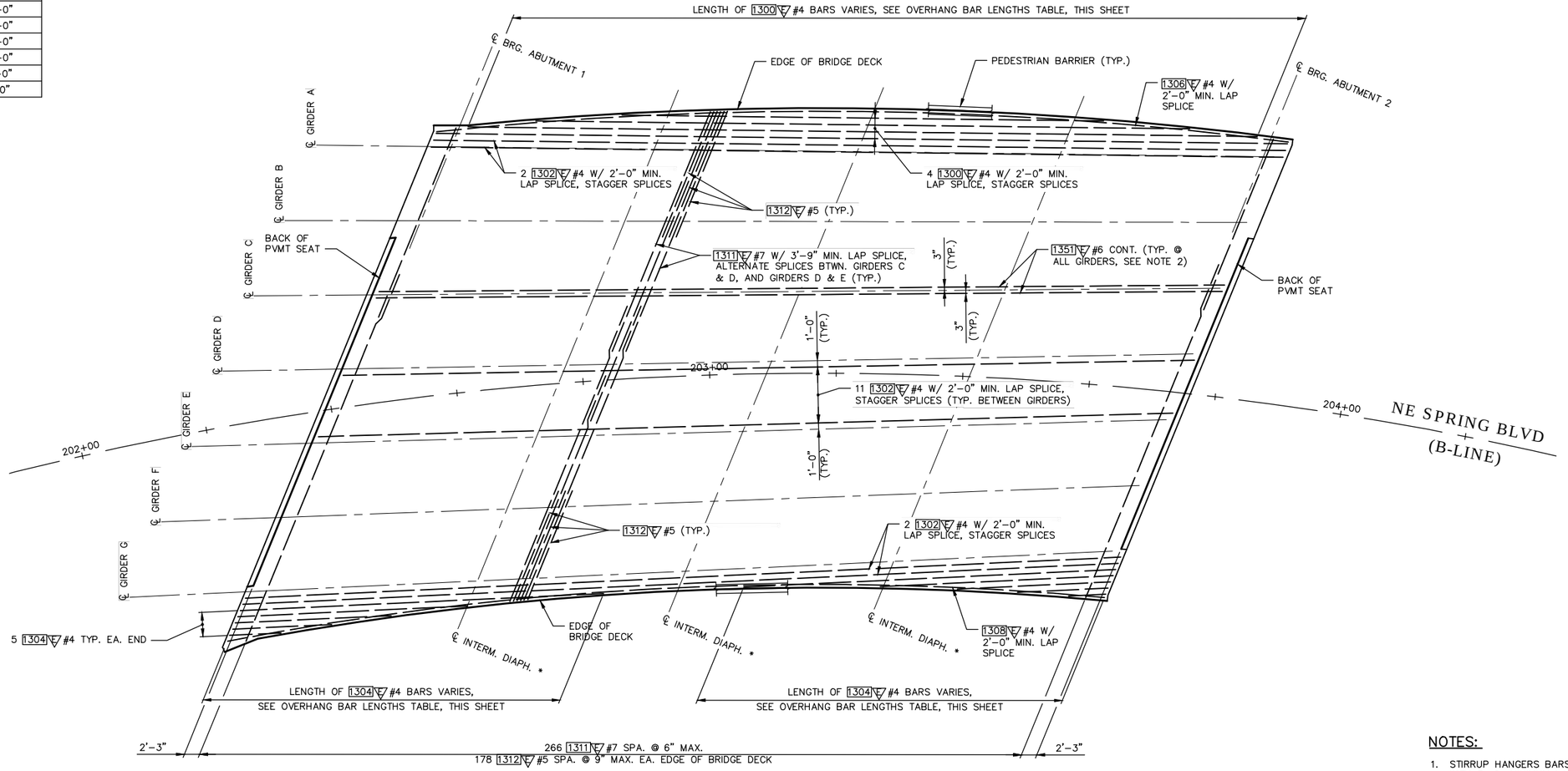

* SEE SHEET BRW22 FOR INTERMEDIATE DIAPHRAGM REINFORCING.

BRIDGE DECK REINFORCEMENT PLAN – TOP

NOTES:

1. STIRRUP HANGERS BARS SHALL BE CONTINUOUS WITH 3'–0" MINIMUM LAP SPLICE.

SCALE 10 5 0 10 20

ROBERT D. RICHARDSON STATE OF WASHINGTON 33999 REGISTERED PROFESSIONAL ENGINEER

NO.	DATE	BY	APPR.	REVISIONS

Approved By

TRANSPORTATION DESIGN MANAGER DATE
S. COSTA
PROJECT MANAGER DATE

E. CLARK
DESIGNED BY DATE
H. GONSIOR
DRAWN BY DATE
R. RICHARDSON
CHECKED BY DATE

City of Bellevue
TRANSPORTATION DEPARTMENT

HDR

NE SPRING BLVD - ZONE 1B
90% DESIGN

WEST BRIDGE
BRIDGE DECK REINFORCEMENT PLAN - TOP

SHEET NAME **BRW26**

SHT 125 OF 185

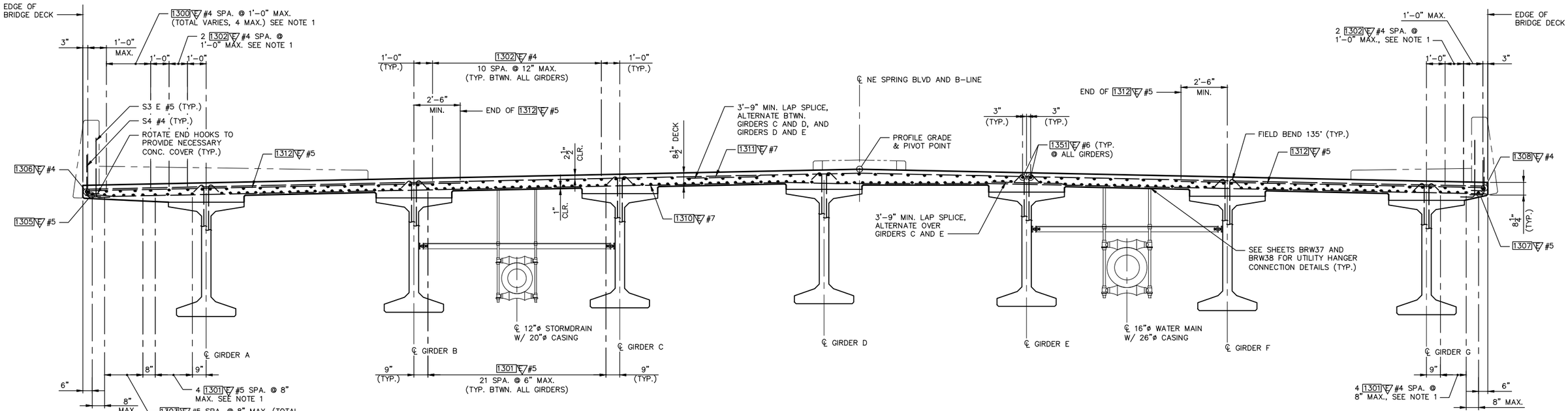

BRIDGE DECK REINFORCEMENT SECTION

SECTION SHOWN NEAR MIDSPAN
(LOOKING FORWARD ON STATION)

NOTES:

1. REINFORCEMENT IN OVERHANGS SHOWN NEAR MIDSPAN. SEE BRIDGE SHEET BRW28 FOR OVERHANG REINFORCING NEAR ABUTMENTS.

ROBERT D. RICHARDSON — STATE OF WASHINGTON — 33999 — REGISTERED PROFESSIONAL ENGINEER

NO.	DATE	BY	APPR.	REVISIONS

Approved By

TRANSPORTATION DESIGN MANAGER — DATE
S. COSTA
PROJECT MANAGER — DATE

E. CLARK — DESIGNED BY — DATE
H. GONSIOR — DRAWN BY — DATE
R. RICHARDSON — CHECKED BY — DATE

City of Bellevue
TRANSPORTATION DEPARTMENT

HDR

NE SPRING BLVD - ZONE 1B
90% DESIGN

WEST BRIDGE
BRIDGE DECK REINF. TYPICAL SECTION

SHEET NAME **BRW27**

SHT 126 OF 185

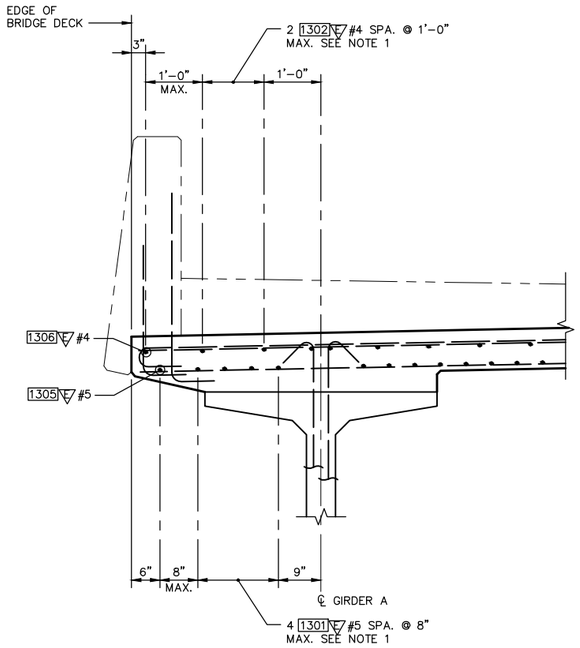

NORTH OVERHANG REINFORCING SECTION

SECTION SHOWN NEAR ABUTMENTS
FOR INFORMATION NOT SHOWN HERE, SEE BRIDGE SHEET BRW27

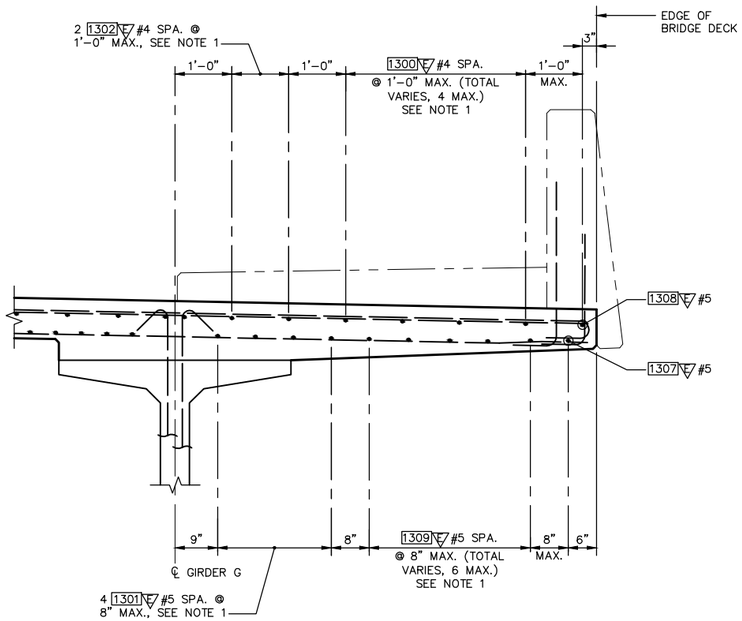

SOUTH OVERHANG REINFORCING SECTION

SECTION SHOWN NEAR ABUTMENTS
FOR INFORMATION NOT SHOWN HERE, SEE BRIDGE SHEET BRW27

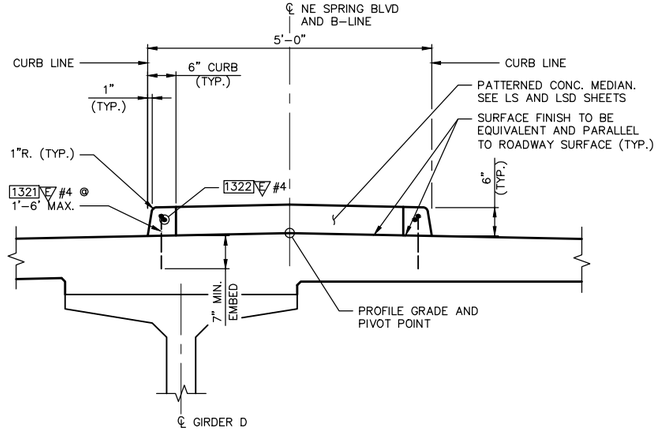

CURB REINFORCING SECTION

MEDIAN ON DECK SHOWN, MEDIAN ON BRIDGE APPROACH
SLAB SIMILAR.

NOTES:

1. PROVIDE THE FOLLOWING MINIMUM LAP SPLICES:
   #4 2'-0"
   #5 2'-6"
   #6 3'-0"
   STAGGER SPLICES, TYPICAL.

ROBERT D. RICHARDSON
STATE OF WASHINGTON
13009
REGISTERED
PROFESSIONAL ENGINEER

NO.	DATE	BY	APPR.	REVISIONS

Approved By

TRANSPORTATION DESIGN MANAGER DATE
S. COSTA
PROJECT MANAGER DATE

E. CLARK
DESIGNED BY DATE
H. GONSIOR
DRAWN BY DATE
R. RICHARDSON
CHECKED BY DATE

City of Bellevue
TRANSPORTATION DEPARTMENT

HDR

NE SPRING BLVD - ZONE 1B
90% DESIGN

WEST BRIDGE
BRIDGE DECK AND MEDIAN REINF. SECTIONS

SHEET NAME BRW28

SHT 127 OF 185

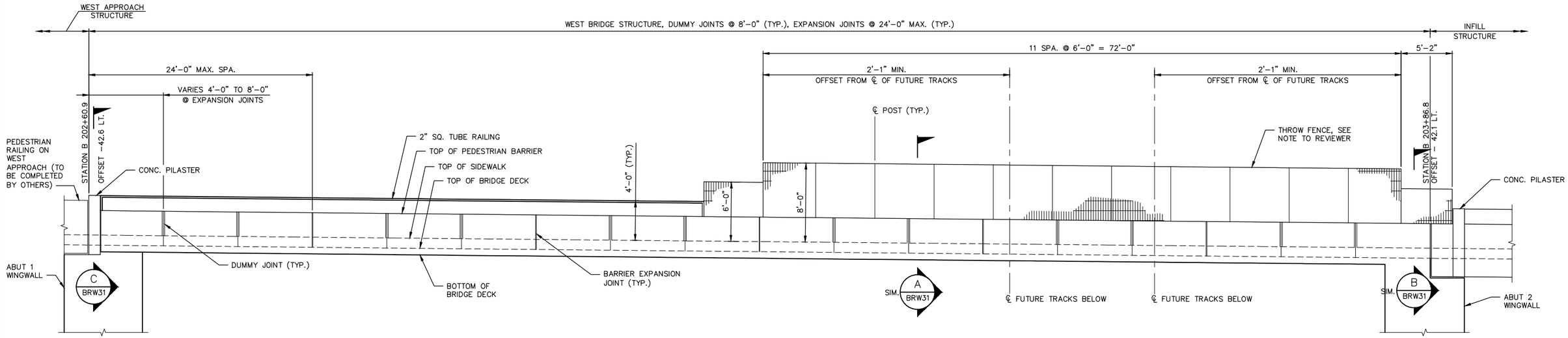

NORTH PEDESTRIAN BARRIER REFLECTED ELEVATION – OUTSIDE FACE

SCALE: 1" = 5'

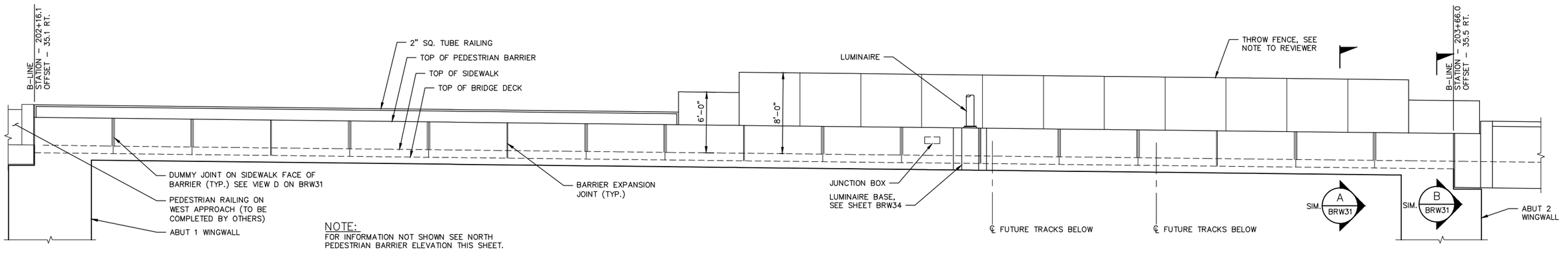

NOTE:
FOR INFORMATION NOT SHOWN SEE NORTH PEDESTRIAN BARRIER ELEVATION THIS SHEET.

SOUTH PEDESTRIAN BARRIER ELEVATION – OUTSIDE FACE

SCALE: 1" = 5'

NOTE TO REVIEWER:
THROW FENCE MATERIALS, DESIGN, AND CALCULATIONS TO BE DETERMINED PENDING OCTOBER 2015 COORDINATION WITH PLANNING AND TRANSPORTATION DEPARTMENTS.

ROBERT D. RICHARDSON — STATE OF WASHINGTON — 33999 — REGISTERED PROFESSIONAL ENGINEER

NO.	DATE	BY	APPR.	REVISIONS

Approved By

TRANSPORTATION DESIGN MANAGER — DATE
S. COSTA
PROJECT MANAGER — DATE

E. CLARK — DESIGNED BY — DATE
H. GONSIOR — DRAWN BY — DATE
R. RICHARDSON — CHECKED BY — DATE

City of Bellevue
TRANSPORTATION DEPARTMENT

HDR

NE SPRING BLVD - ZONE 1B
90% DESIGN

WEST BRIDGE
PEDESTRIAN BARRIER ELEVATIONS

SHEET NAME **BRW29**

SHT 128 OF 185

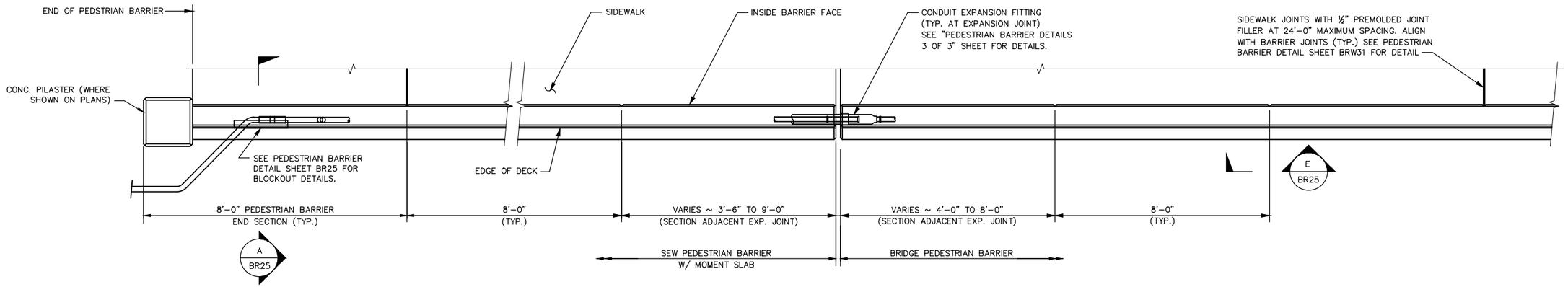

PEDESTRIAN BARRIER – PARTIAL PLAN

CONSTRUCTION JOINTS WITH SHEAR KEYS ARE PERMISSIBLE AT DUMMY JOINT LOCATIONS.
FORM JOINTS BETWEEN DUMMY JOINTS SHALL NOT BE PERMITTED.

NOTES:

1. SEE LANDSCAPE AND URBAN DESIGN PLAN SHEETS FOR SIDEWALK SCORING AND COLORING DETAILS.
2. TERMINATE EACH CONDUIT PIPE AT SEPARATE JUNCTION BOXES. SEE ILLUMINATION AND SIGNING PLANS FOR DETAILS.
3. SEE RETAINING WALL PLAN AND DETAIL SHEETS FOR SEW PEDESTRIAN BARRIER DETAILS.

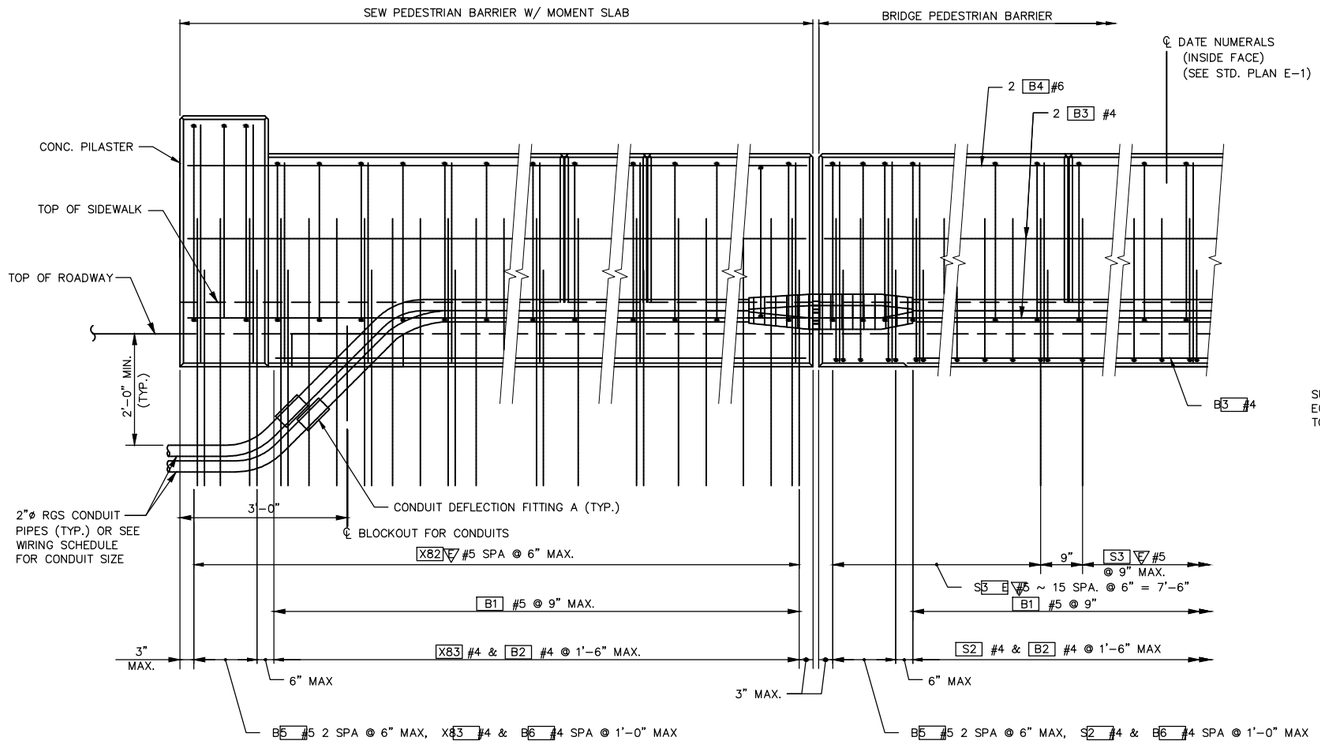

PEDESTRIAN BARRIER – PARTIAL OUTSIDE ELEVATION

SHOWN WITH WING WALL

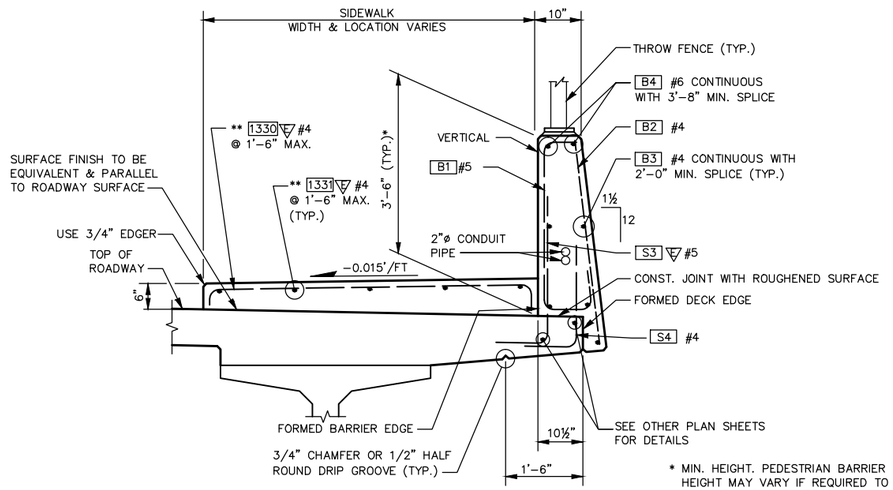

TYPICAL SECTION

PEDESTRIAN BARRIER
(SHOWN ON BRIDGE)

* MIN. HEIGHT. PEDESTRIAN BARRIER HEIGHT MAY VARY IF REQUIRED TO PROVIDE A SMOOTH PROFILE.

** INCLUDE IN SUPERSTRUCTURE BARLIST.

ROBERT D. RICHARDSON — STATE OF WASHINGTON — 33999 — REGISTERED PROFESSIONAL ENGINEER

NO.	DATE	BY	APPR.	REVISIONS

Approved By

TRANSPORTATION DESIGN MANAGER — DATE
S. COSTA
PROJECT MANAGER — DATE

E. CLARK
DESIGNED BY — DATE
H. GONSIOR
DRAWN BY — DATE
R. RICHARDSON
CHECKED BY — DATE

City of Bellevue
TRANSPORTATION DEPARTMENT

HDR

NE SPRING BLVD - ZONE 1B
90% DESIGN

WEST BRIDGE
PEDESTRIAN BARRIER DETAILS 1 OF 3

SHEET NAME **BRW30**

SHT 129 OF 185

GENERAL NOTES:

1. FOR BARRIER DETAILS NOT SHOWN SEE "OUTSIDE ELEVATION" AND "TYPICAL SECTION ~ PEDESTRIAN BARRIER".
2. FOR WINGWALL REINFORCING NOT SHOWN SEE WINGWALL PLANS.
3. FOR DIAPHRAGM REINFORCING NOT SHOWN SEE ABUTMENT DETAILS.

JUNCTION BOX LOCATIONS		
STATION	OFFSET	TS OR LT
203+14.0	35.3 RT.	LT

TS – TRAFFIC SYSTEM
LT – LIGHTING SYSTEM
JUNCTION BOX LOCATION SHOWN IS APPROXIMATE. CENTER J–BOX BETWEEN BARRIER JOINTS.

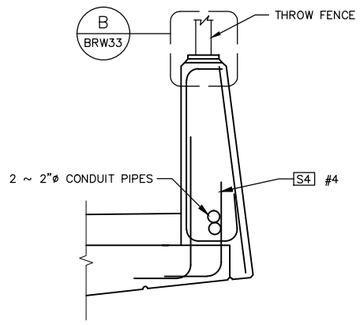

SECTION A
BRIDGE W/ THROW FENCE
BRW29

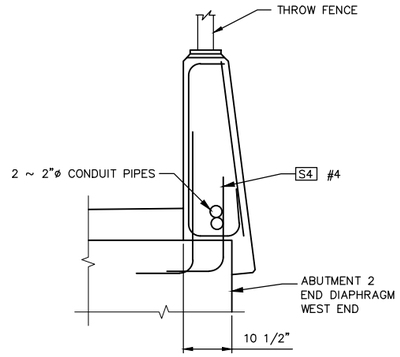

SECTION B
BRW29

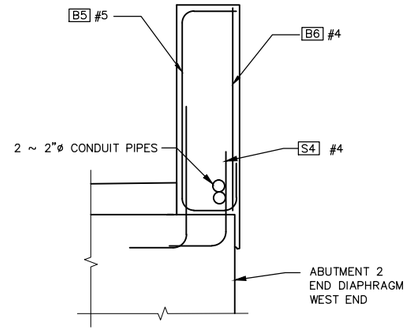

SECTION C
ABUTMENT W/ PILASTER
SEE NOTE TO REVIEWER
BRW29

NOTE TO REVIEWER:
PILASTER DETAILS AND REINFORCING TO BE COMPLETED POST 90% PENDING ADDITIONAL COORDINATION WITH PLANING AND TRANSPORTATION DEPARTMENTS.

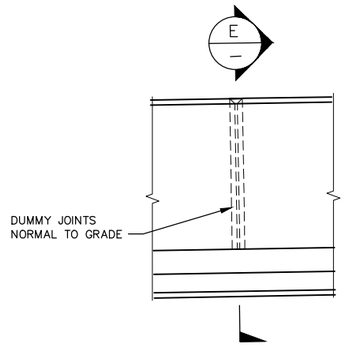

VIEW D
BRW29

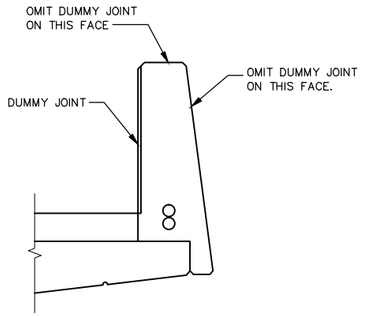

SECTION E
–

BARRIER – BENDING DIAGRAM

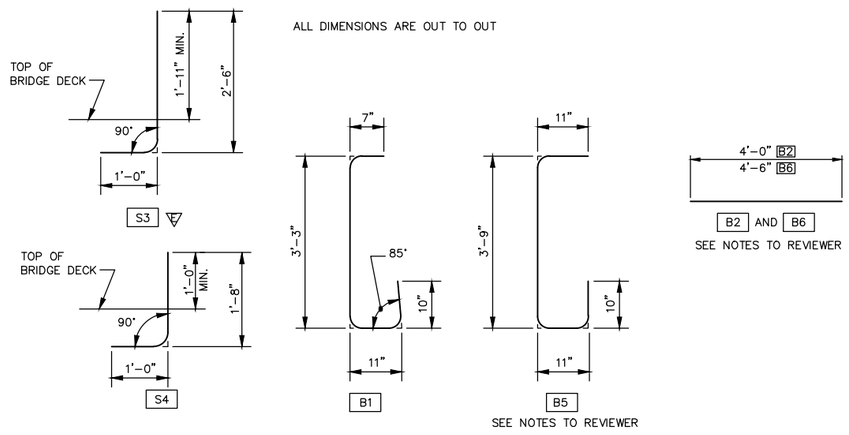

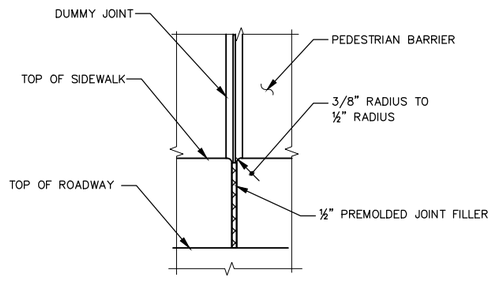

SIDEWALK JOINT DETAIL
SIDEWALK REINFORCING STEEL NOT SHOWN FOR CLARITY.

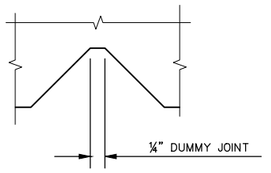

DUMMY JOINT DETAIL

RODNEY D. RICHARDSON
STATE OF WASHINGTON
33999
REGISTERED
PROFESSIONAL ENGINEER

NO.	DATE	BY	APPR.	REVISIONS

Approved By

TRANSPORTATION DESIGN MANAGER DATE
S. COSTA
PROJECT MANAGER DATE

E. CLARK
DESIGNED BY DATE
H. GONSIOR
DRAWN BY DATE
R. RICHARDSON
CHECKED BY DATE

City of Bellevue
TRANSPORTATION DEPARTMENT

HDR

NE SPRING BLVD - ZONE 1B
90% DESIGN

WEST BRIDGE
PEDESTRIAN BARRIER DETAILS 2 OF 3

SHEET NAME BRW31

SHT 130 OF 185

NOTE:
PROVIDE DRAINS AT ALL LOW POINTS IN CONDUIT RUNS ON BRIDGE OR SLOPE RUNS TO DRAIN TO ENDS OF BRIDGE.

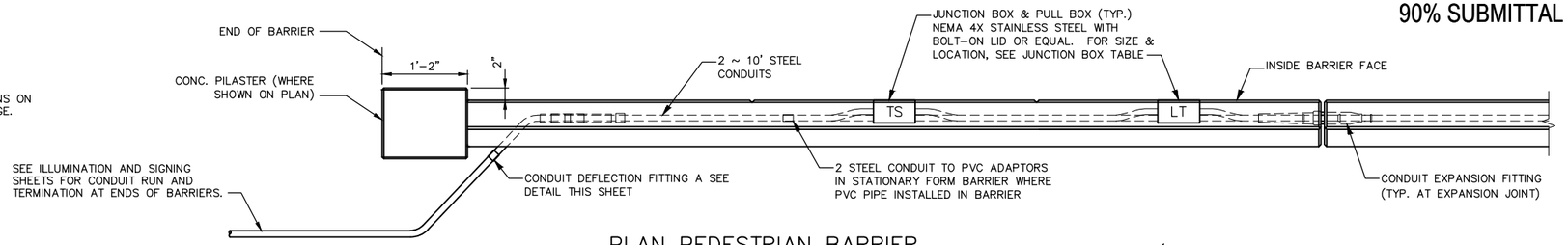

PLAN PEDESTRIAN BARRIER

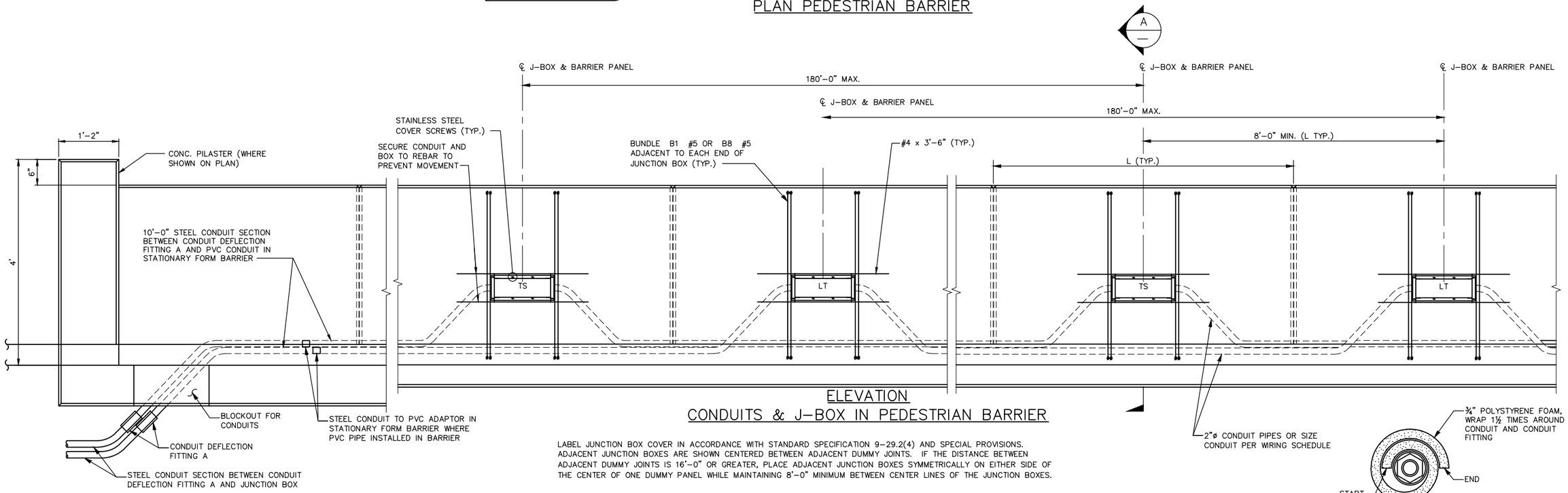

ELEVATION
CONDUITS & J-BOX IN PEDESTRIAN BARRIER

LABEL JUNCTION BOX COVER IN ACCORDANCE WITH STANDARD SPECIFICATION 9-29.2(4) AND SPECIAL PROVISIONS. ADJACENT JUNCTION BOXES ARE SHOWN CENTERED BETWEEN ADJACENT DUMMY JOINTS. IF THE DISTANCE BETWEEN ADJACENT DUMMY JOINTS IS 16'-0" OR GREATER, PLACE ADJACENT JUNCTION BOXES SYMMETRICALLY ON EITHER SIDE OF THE CENTER OF ONE DUMMY PANEL WHILE MAINTAINING 8'-0" MINIMUM BETWEEN CENTER LINES OF THE JUNCTION BOXES.

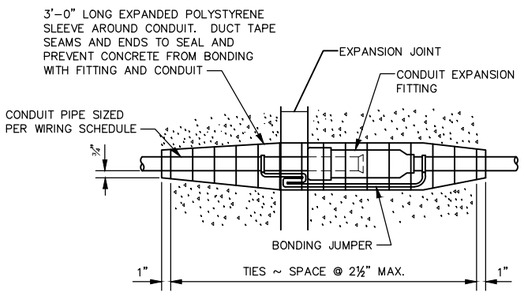

CONDUIT EXPANSION FITTING

CONDUIT FITTING – (TYPE AX FOR MOVEMENT OF ± 2") AT BRIDGE EXPANSION JOINTS

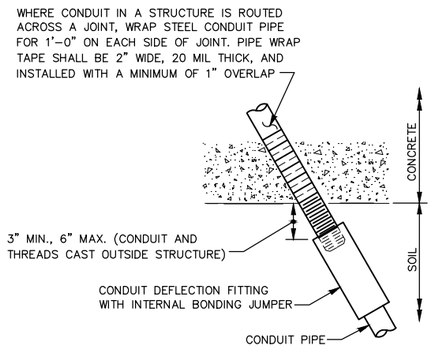

CONDUIT DEFLECTION FITTING A

CONDUIT FITTING – TYPE DX FOR DEFLECTION OF 30° AND ¾" MOVEMENT. PLACE AT CONDUIT PIPE EXIT FROM STRUCTURE

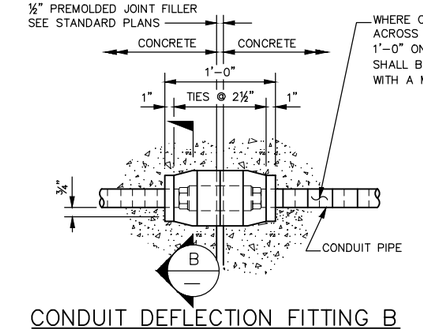

CONDUIT DEFLECTION FITTING B

CONDUIT FITTING – TYPE DX FOR DEFLECTION OF 30° AND ¾" MOVEMENT. CONDUIT PIPES PLACED THROUGH RETAINING WALL PEDESTRIAN BARRIER SHALL BE FITTED WITH DEFLECTION FITTINGS AT A MAXIMUM SPACING OF 120'. THE DEFLECTION FITTINGS SHALL BE PLACED AT THE PEDESTRIAN BARRIER OPEN JOINT THAT COINCIDES WITH THE RETAINING WALL STEM EXPANSION JOINT NEAREST TO THE TRANSVERSE CONSTRUCTION JOINT IN THE WALL FOOTING.

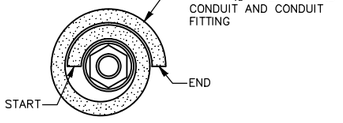

SECTION B
N.T.S.

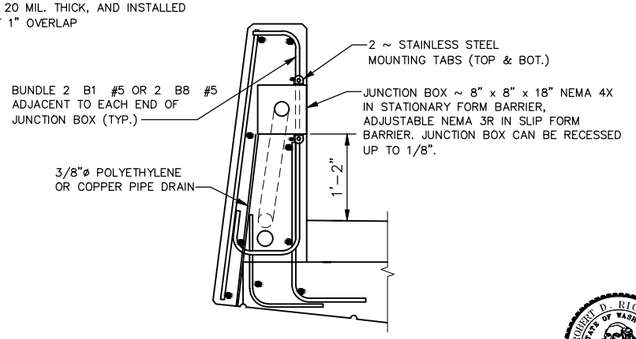

SECTION A
N.T.S.

ROBERT D. RICHARDSON STATE OF WASHINGTON 13909 REGISTERED PROFESSIONAL ENGINEER

NO.	DATE	BY	APPR.	REVISIONS

Approved By

TRANSPORTATION DESIGN MANAGER DATE
S. COSTA
PROJECT MANAGER DATE

E. CLARK
DESIGNED BY DATE
H. GONSIOR
DRAWN BY DATE
R. RICHARDSON
CHECKED BY DATE

City of Bellevue
TRANSPORTATION DEPARTMENT

HDR

NE SPRING BLVD - ZONE 1B
90% DESIGN

WEST BRIDGE
PEDESTRIAN BARRIER DETAILS 3 OF 3

SHEET NAME **BRW32**

SHT 131 OF 185

90% SUBMITTAL NOT FOR CONSTRUCTION

NOTES:

1. SEE LANDSCAPE AND URBAN DESIGN PLANS FOR THROW FENCE LAYOUT AND DIMENSIONS NOT SHOWN.
2. INSTALL ALL FENCE POSTS PLUMB.
3. SEE LANDSCAPE AND URBAN DESIGN PLANS FOR PEDESTRIAN RAILING DETAILS.

NOTE TO REVIEWER:
THROW FENCE MATERIALS, DESIGN, AND CALCULATIONS TO BE DETERMINED PENDING OCTOBER 2015 COORDINATION WITH PLANNING AND TRANSPORTATION DEPARTMENTS.

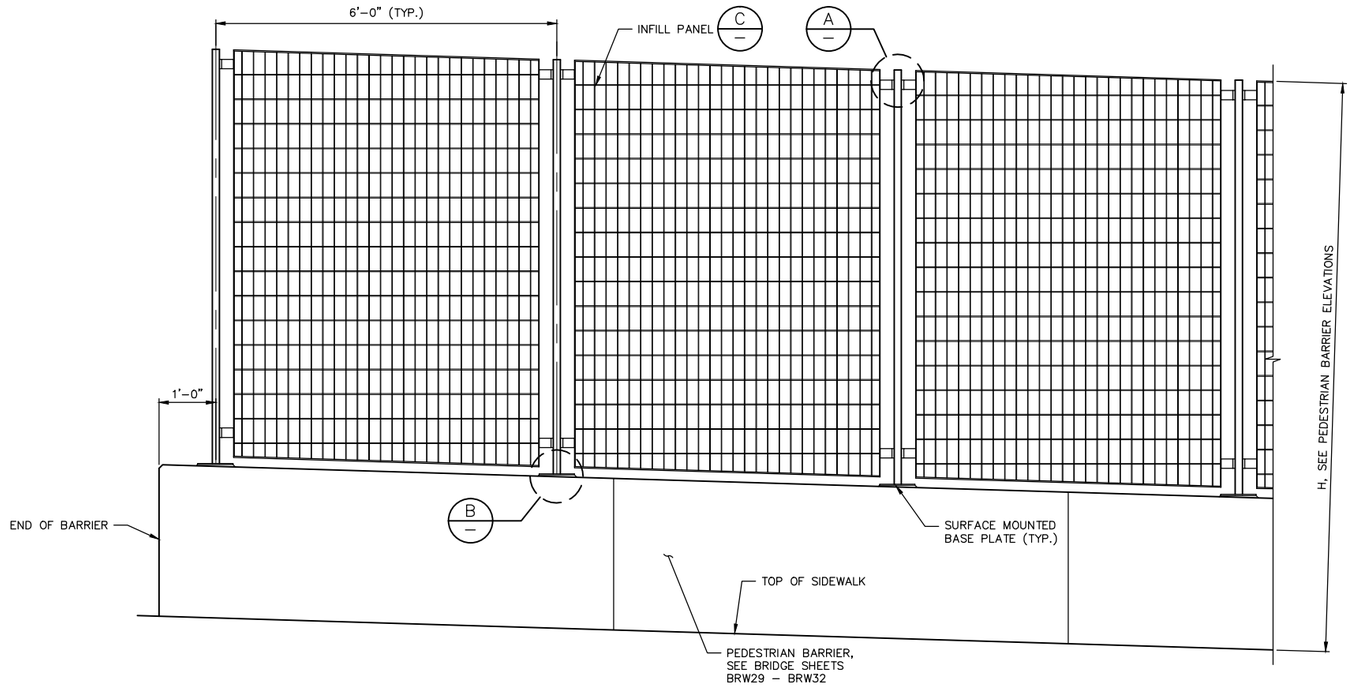

THROW FENCE

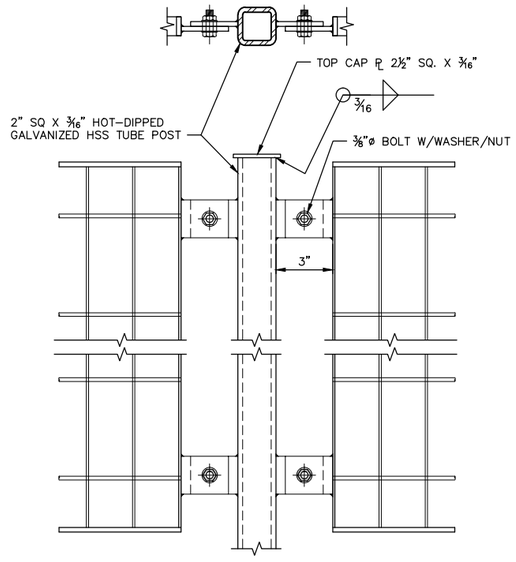

DETAIL A
N.T.S.

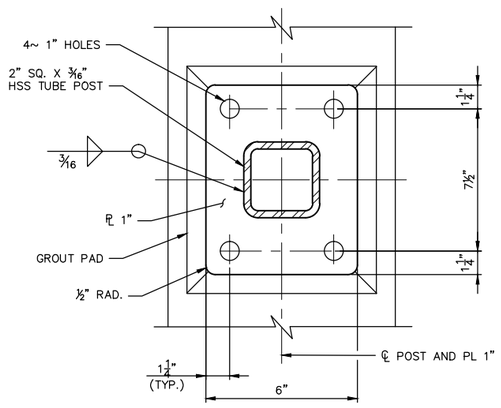

PLAN

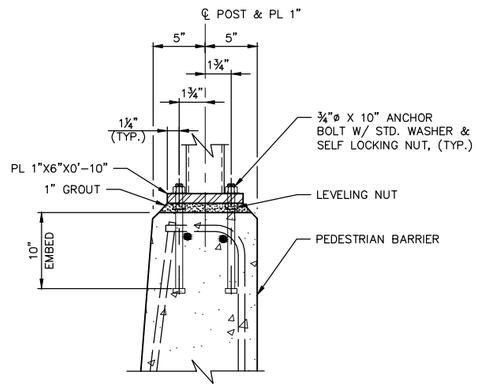

SECTION

DETAIL B
N.T.S.

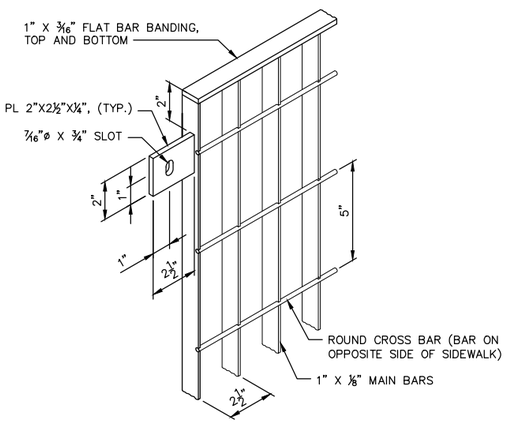

DETAIL C
N.T.S.

ROBERT D. RICHARDSON
STATE OF WASHINGTON
13909
REGISTERED PROFESSIONAL ENGINEER

NO.	DATE	BY	APPR.	REVISIONS

Approved By

TRANSPORTATION DESIGN MANAGER — DATE
S. COSTA
PROJECT MANAGER — DATE

E. CLARK — DESIGNED BY — DATE
H. GONSIOR — DRAWN BY — DATE
R. RICHARDSON — CHECKED BY — DATE

City of Bellevue
TRANSPORTATION DEPARTMENT

HDR

NE SPRING BLVD - ZONE 1B
90% DESIGN

WEST BRIDGE
THROW FENCE ANCHORAGE DETAILS

SHEET NAME BRW33

SHT 132 OF 185

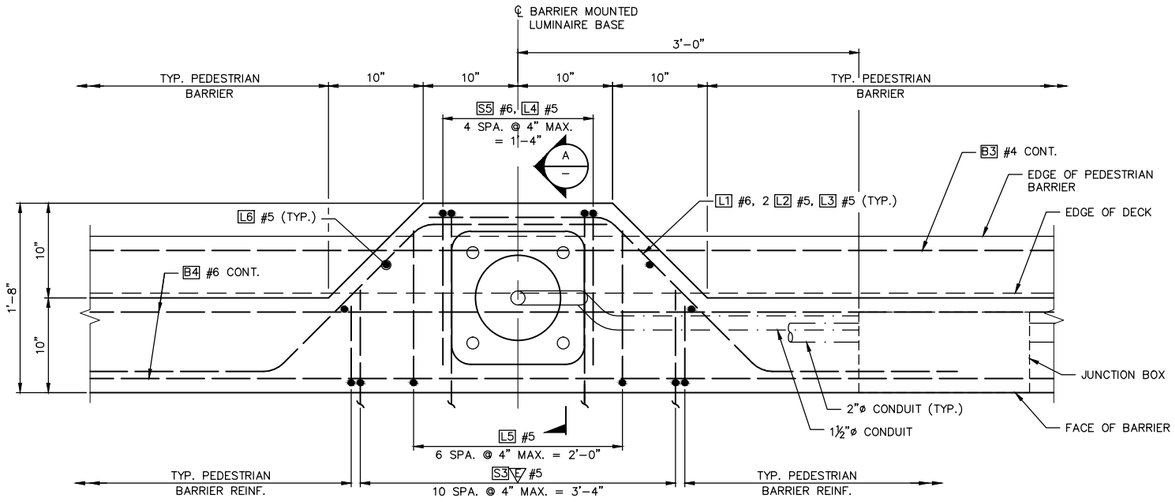

LUMINAIRE BASE AT PEDESTRIAN BARRIER

LUMINAIRE POLE LOCATIONS	
STATION	OFFSET
B 203+18	33.83' RT.
B 204+87*	41.83' LT.
B 206+14	41.83' LT.

* LUMINAIRE LOCATED ON PEDESTRIAN BARRIER W/ MOMENT SLAB, SEE WD SHEETS.

NOTES:

1. FOR LUMINAIRE DETAILS, SEE ILG AND ILS SHEETS.
2. ANCHOR BOLTS SHALL CONFORM TO THE SPECIFICATIONS OF THE LUMINAIRE POLE MANUFACTUERER'S PRE-APPROVED DRAWING.

LUMINAIRE ANCHORAGE BAR LIST			
MARK	SIZE	NO. REQ'D	LENGTH
L1	#6	2	5'-2"
L2	#5	4	5'-2"
L3	#5	2	2'-6"
L4	#5	5	4'-9"
L5	#5	7	5'-0"
L6	#5	2	3'-8"

BENDING DIAGRAM
(ALL DIMENSIONS ARE OUT-TO-OUT)

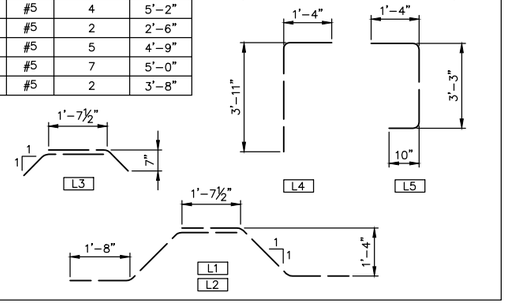

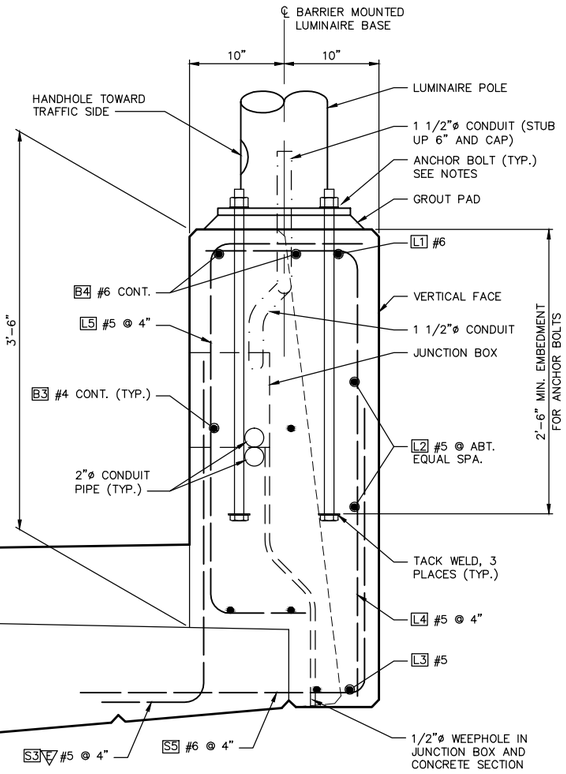

SECTION A
SCALE: 1 1/2"=1'-0"

ROBERT D. RICHARDSON — STATE OF WASHINGTON — 33999 — REGISTERED PROFESSIONAL ENGINEER

NO.	DATE	BY	APPR.	REVISIONS

Approved By

TRANSPORTATION DESIGN MANAGER — DATE
S. COSTA
PROJECT MANAGER — DATE

E. CLARK — DESIGNED BY — DATE
H. GONSIOR — DRAWN BY — DATE
R. RICHARDSON — CHECKED BY — DATE

City of Bellevue
TRANSPORTATION DEPARTMENT

HDR

NE SPRING BLVD - ZONE 1B
90% DESIGN

WEST BRIDGE
LUMINAIRE ANCHORAGE DETAILS

SHEET NAME BRW34

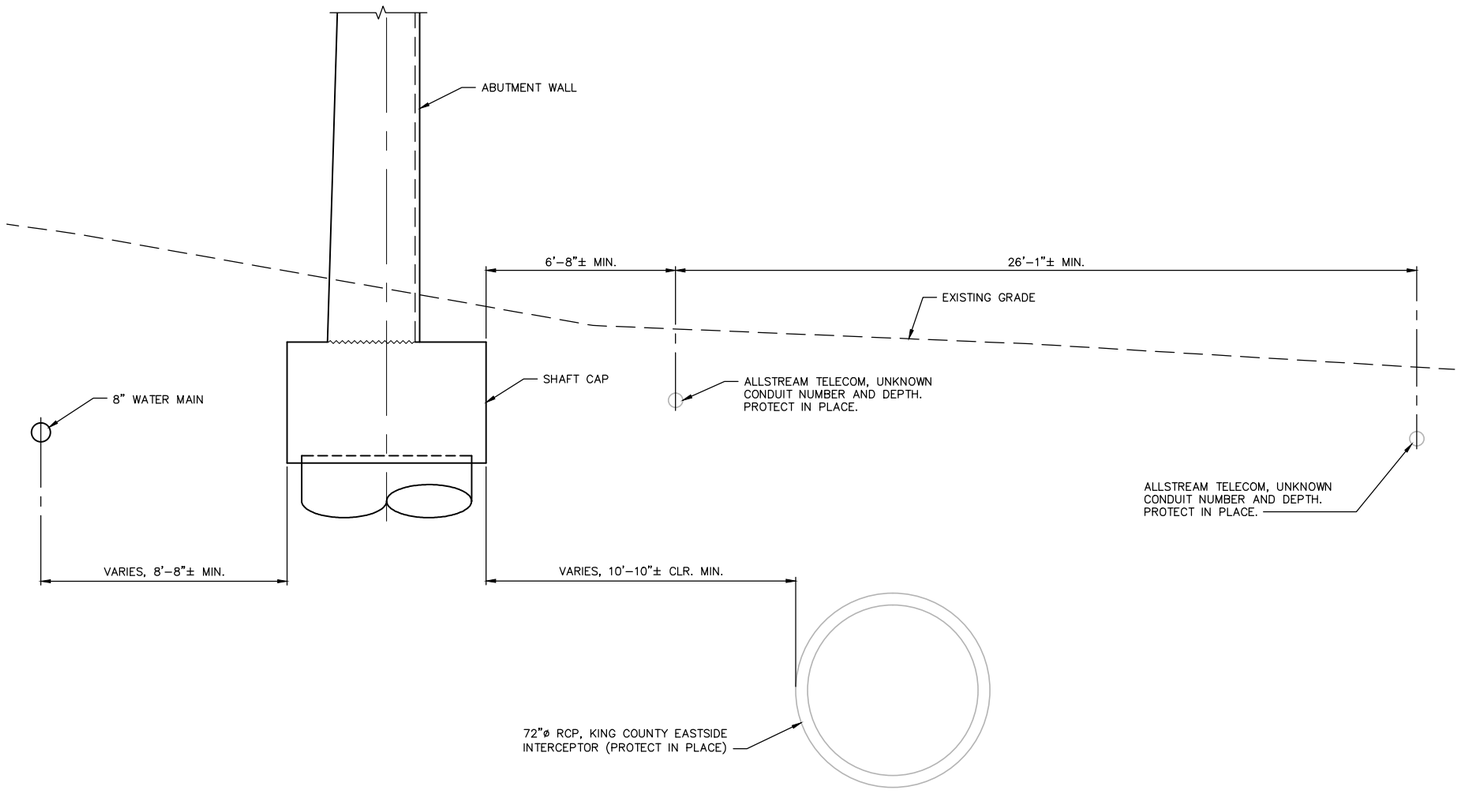

ABUTMENT 1 – BURIED UTILITIES SECTION

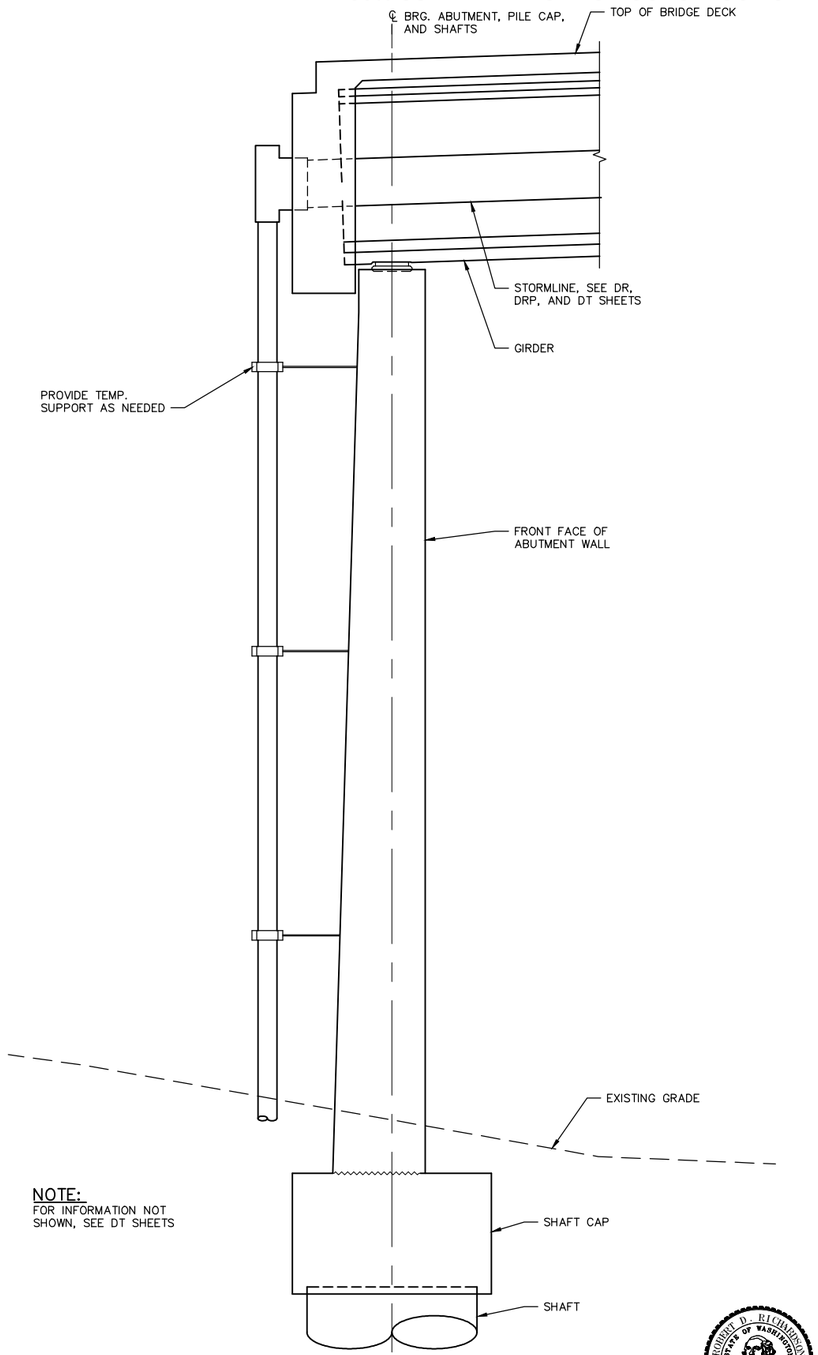

NOTE:
FOR INFORMATION NOT SHOWN, SEE DT SHEETS

ABUT. 1 SECTION – TEMPORARY STORMLINE SUPPORT

NO.	DATE	BY	APPR.	REVISIONS

Approved By

TRANSPORTATION DESIGN MANAGER S. COSTA DATE

PROJECT MANAGER DATE

E. CLARK DESIGNED BY DATE

H. GONSIOR DRAWN BY DATE

R. RICHARDSON CHECKED BY DATE

City of Bellevue
TRANSPORTATION DEPARTMENT

HDR

NE SPRING BLVD - ZONE 1B
90% DESIGN

WEST BRIDGE
BURIED UTILITIES DETAILS

SHEET NAME BRW35

SHT 134 OF 185

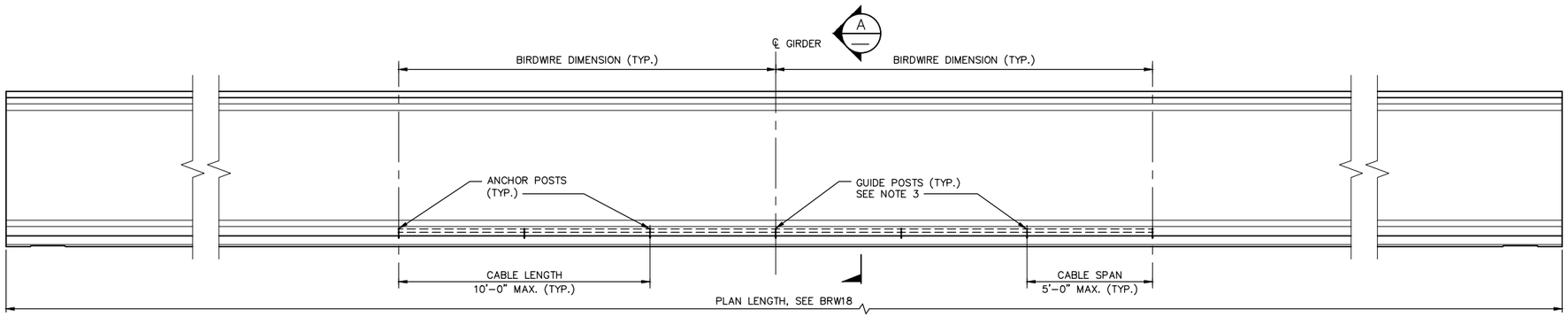

POST LAYOUT ELEVATION

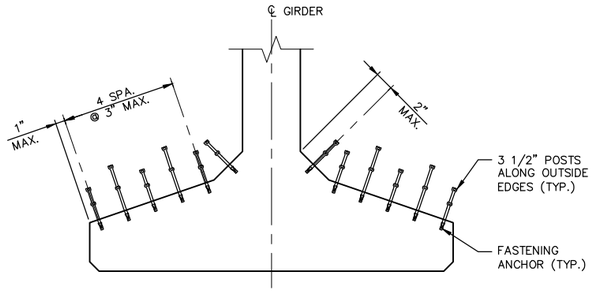

POST LAYOUT SECTION A

N.T.S.

TYPICAL INTERIOR GIRDER – POST LAYOUT
GUIDE POSTS SHOWN, ANCHOR POSTS SIMILAR

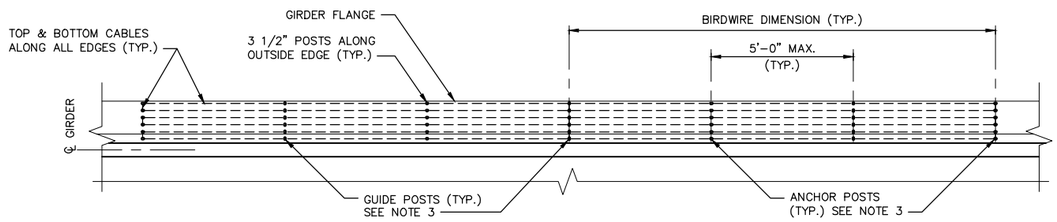

POST LAYOUT PLAN

ONE FLANGE SHOWN, MIRROR SIMILAR

BIRDWIRE DIMENSION		
GIRDER	WEST OF ℄ (FT.)	EAST OF ℄ (FT.)
A*	12	12
B	12	12
C	12	12
D	12	12
E	12	12
F	14	10
G*	15	10

* EXTERIOR GIRDERS, SEE NOTE 7

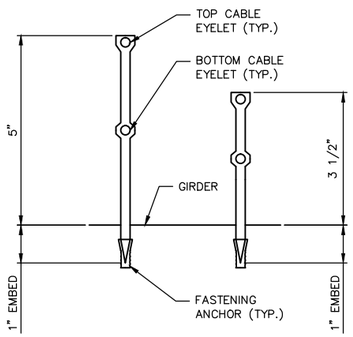

POST & FASTENING ANCHOR DETAIL

N.T.S.

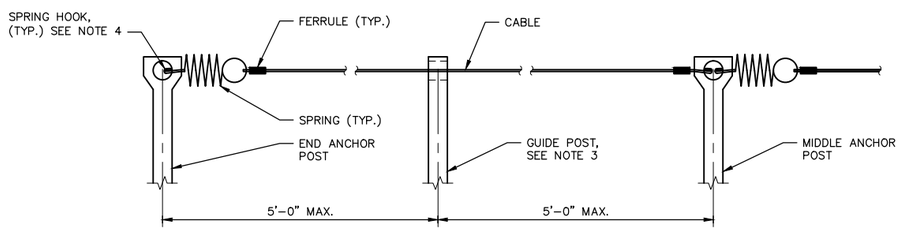

CABLE CONNECTION DETAIL

N.T.S.

NOTES:

1. INSTALL POSTS IN ¼"ø x 1⅛" DRILLED HOLE WITH FASTENING ANCHOR, SEE POST AND FASTENING ANCHOR DETAIL.
2. ALTERNATE ANCHOR POST SIZES PER ROW AS SHOWN IN POST LAYOUT SECTION.
3. GUIDE POSTS ARE ANCHOR POSTS ROTATED 90° SO THAT POST EYELETS FACE DIRECTION OF CABLE TRAVEL.
4. ATTACH HOOKED END OF SPRING TO ANCHOR POST EYELETS. ALTERNATE SPRING CONNECTIONS. SEE POST LAYOUT ELEVATION AND CABLE CONNECTION DETAIL.
5. CRIMP FERRULES TO SECURE LOOPED CABLE TO ANCHOR POST EYELETS OR SPRING EYELETS. SEE CABLE CONNECTION DETAIL.
6. TENSION CABLE SO THAT IT IS TAUT WITHOUT EXTENDING SPRING.
7. DO NOT INSTALL BIRDWIRE ON EXTERIOR FLANGES OF EXTERIOR GIRDERS.

ROBERT D. RICHARDSON STATE OF WASHINGTON 33999 REGISTERED PROFESSIONAL ENGINEER

NO.	DATE	BY	APPR.	REVISIONS

Approved By

TRANSPORTATION DESIGN MANAGER DATE
S. COSTA
PROJECT MANAGER DATE

E. CLARK DESIGNED BY DATE
H. GONSIOR DRAWN BY DATE
R. RICHARDSON CHECKED BY DATE

City of Bellevue
TRANSPORTATION DEPARTMENT

HDR

NE SPRING BLVD - ZONE 1B
90% DESIGN

WEST BRIDGE
BIRD DETERRENCE DETAILS

SHEET NAME BRW36

90% SUBMITTAL NOT FOR CONSTRUCTION

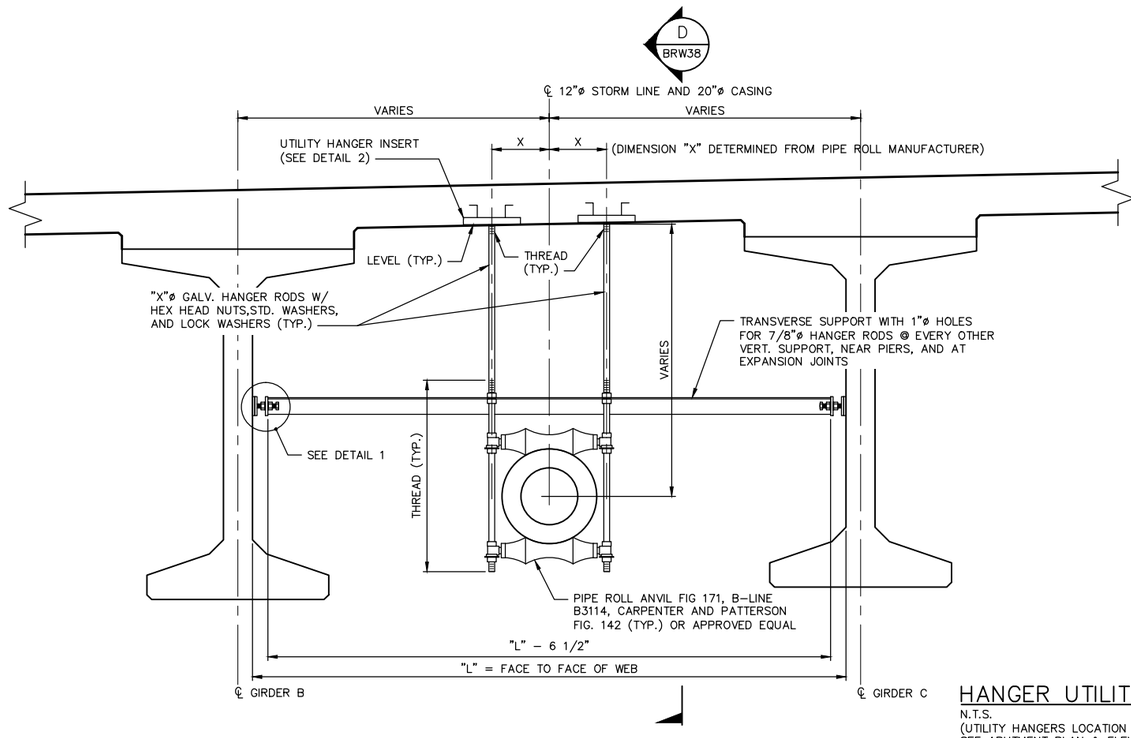

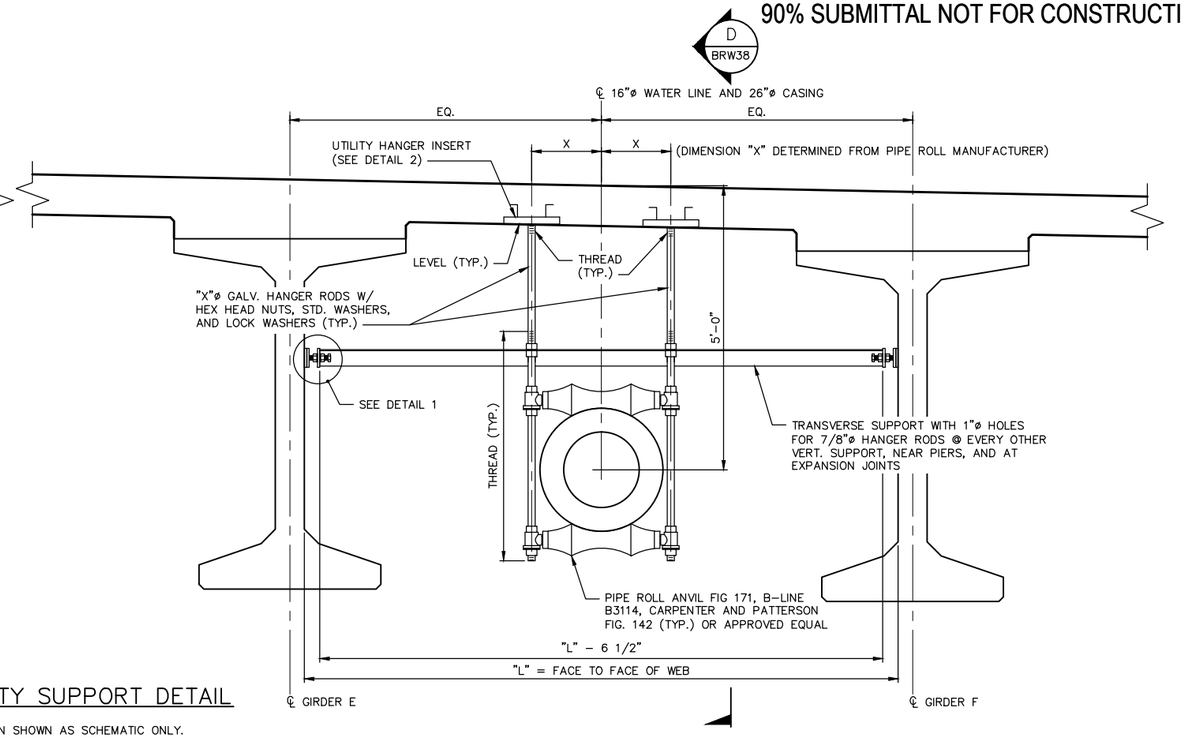

HANGER UTILITY SUPPORT DETAIL

N.T.S.
(UTILITY HANGERS LOCATION SHOWN AS SCHEMATIC ONLY.
SEE ABUTMENT PLAN & ELEVATION AND FRAMING PLAN
FOR LOCATION.)

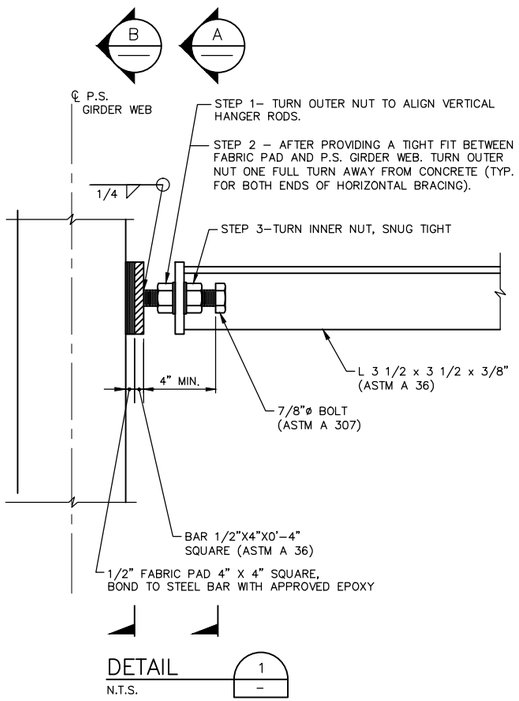

DETAIL 1
N.T.S.

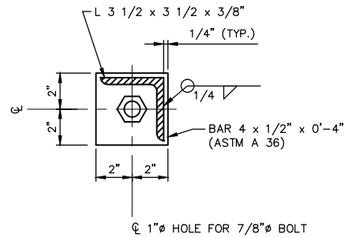

SECTION A
N.T.S.

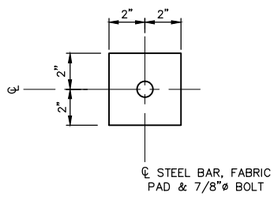

SECTION B
N.T.S.

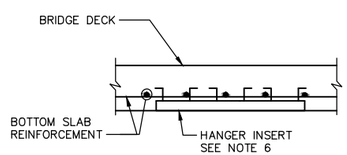

DETAIL 2
N.T.S.

GENERAL NOTES:

1. DIMENSION 'X' DETERMINED FROM MANUFACTURER.
2. ALL MATERIALS SHALL BE GALVANIZED AFTER FABRICATION IN ACCORDANCE WITH AASHTO M 111 OR AASHTO M 232 EXCEPT PIPE ROLLERS.
3. PAINT PIPE ROLLERS WITH THREE COATS OF GALVANIZING REPAIR PAINT IN ACCORDANCE WITH STD. SPEC. 9-08.1(2)B.
4. WHERE UTILITY EXPANSION JOINTS ARE LOCATED, PROVIDE HANGER SUPPORTS AT EACH END OF JOINTS IN ACCORDANCE WITH RECOMMENDATIONS BY MANUFACTURER OF UTILITY JOINT.
5. CONTRACTOR SHALL VERIFY THE CASING DIAMETER AND PIPE ROLLS WITH UTILITIES AND ADJUST DIMENSIONS AS NECESSARY.
6. UTILITY HANGER INSERT SHALL BE EITHER COOPER B-LINE B22-I-XX, POWERSTRUT PS 349-XX, UNISTRUT P32XX, OR APPROVED EQUAL WITH SPRING NUT. HANGER SIZE (VARIABLE 'XX') SHALL BE DETERMINED BY THE CONTRACTOR & ADJUSTED TO MATCH PIPE ROLL. INSERT TO BE INSTALLED LEVEL LONGITUDINALLY AND TRANSVERSELY. PLACE INSERT TO PROVIDE FOR TRANSVERSE ADJUSTMENT OF HANGER RODS.
7. CHASE THREADS ON HANGER ROD FOR THREAD COMPATIBILITY WITH SPRING NUT. HANGER RODS SHALL NOT BE WITHIN 2" OF THE END OF THE INSERT. TWO INSERTS MAY BE USED TO ACCOMMODATE SUPERELEVATIONS.

ROBERT D. RICHARDSON
STATE OF WASHINGTON
33999
REGISTERED
PROFESSIONAL ENGINEER

NO.	DATE	BY	APPR.	REVISIONS

Approved By

TRANSPORTATION DESIGN MANAGER — DATE
S. COSTA
PROJECT MANAGER — DATE

E. CLARK — DESIGNED BY — DATE
H. GONSIOR — DRAWN BY — DATE
R. RICHARDSON — CHECKED BY — DATE

City of Bellevue
TRANSPORTATION DEPARTMENT

HDR

NE SPRING BLVD - ZONE 1B
90% DESIGN

WEST BRIDGE
UTILITY HANGER DETAILS 1 OF 2

SHEET NAME BRW37

SHT 136 OF 185

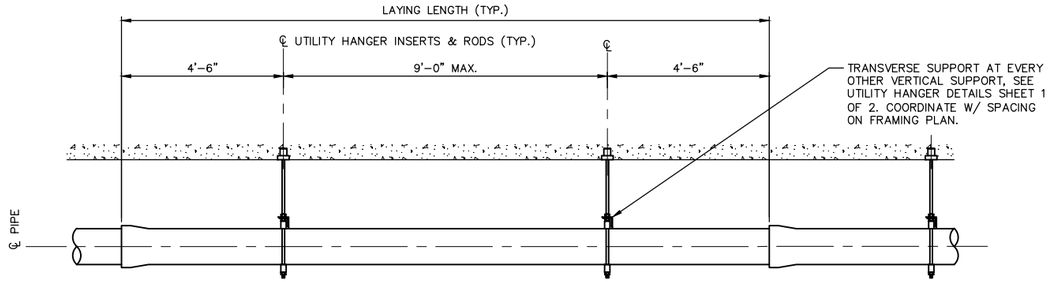

SECTION D
N.T.S.
BRW38

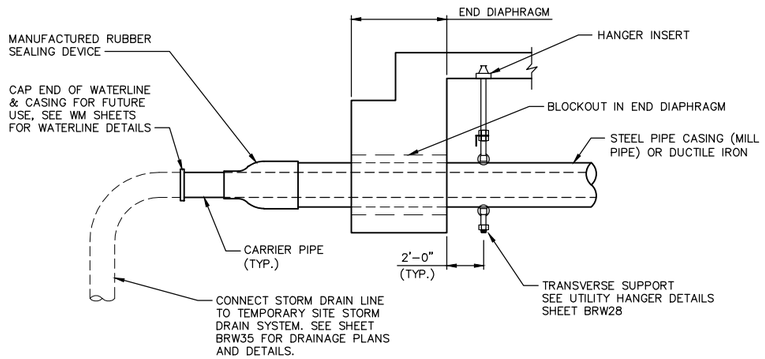

UTILITY CASING PLACEMENT DETAIL THRU ABUTMENT 1
N.T.S.

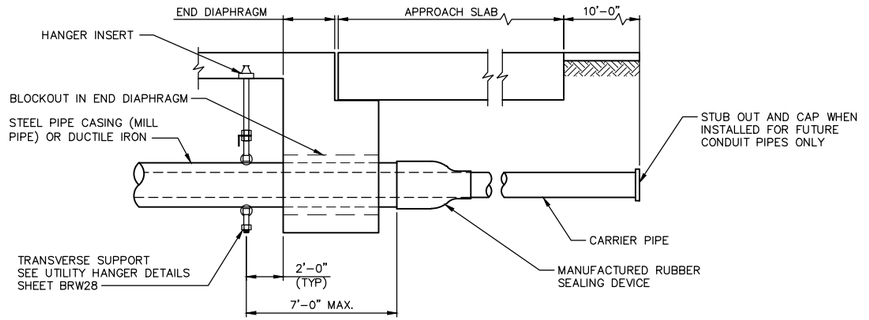

UTILITY CASING PLACEMENT DETAIL THRU ABUTMENT 2
N.T.S.

GENERAL NOTES:

1. FOR CASING DETAILS AND RUBBER SEAL DEVICE, SEE COB STANDARD DRAWING NO. D–56, CASING INSTALLATION.
2. CASINGS SHALL BE SHOP PAINTED WITH AN ANTI–CORROSIVE COATING ON THE XTERIOR CONFORMING TO AWWA C210. MINIMUM COATING THICKNESS OF 16 MILS DFT (NOT TO EXCEED MANUFACTURER'S MAXIMUM THICKNESS). PRODUCT SHALL BE EQUAL TO TNEMEC HI BUILD TNEMEC–TAR SERIES 46H–413.

ROBERT D. RICHARDSON STATE OF WASHINGTON 33999 REGISTERED PROFESSIONAL ENGINEER

NO.	DATE	BY	APPR.	REVISIONS

Approved By

TRANSPORTATION DESIGN MANAGER S. COSTA DATE
PROJECT MANAGER DATE

E. CLARK DESIGNED BY DATE
H. GONSIOR DRAWN BY DATE
R. RICHARDSON CHECKED BY DATE

City of Bellevue
TRANSPORTATION DEPARTMENT

HDR

NE SPRING BLVD - ZONE 1B
90% DESIGN

WEST BRIDGE
UTILITY HANGER DETAILS 2 OF 2

SHEET NAME BRW38

SHT 137 OF 185

NO.	DATE	BY	APPR.	REVISIONS

Approved By

TRANSPORTATION DESIGN MANAGER DATE

S. COSTA

PROJECT MANAGER DATE

E. CLARK
DESIGNED BY DATE

H. GONSIOR
DRAWN BY DATE

R. RICHARDSON
CHECKED BY DATE

City of Bellevue
TRANSPORTATION DEPARTMENT

HDR

NE SPRING BLVD - ZONE 1B
90% DESIGN

WEST BRIDGE
ILLUMINATION DETAILS

SHEET NAME BRW39

SHT 138 OF 185

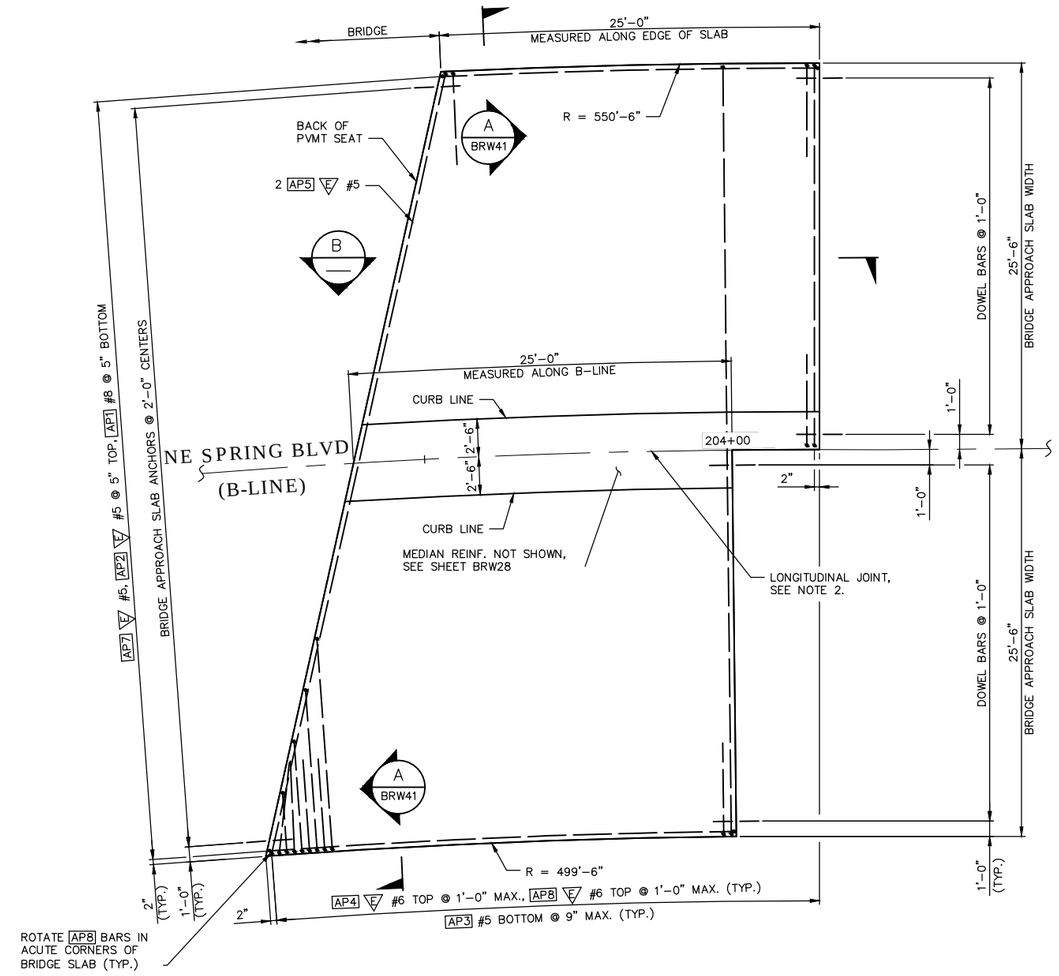

PLAN – ABUTMENT 2 BRIDGE APPROACH SLAB

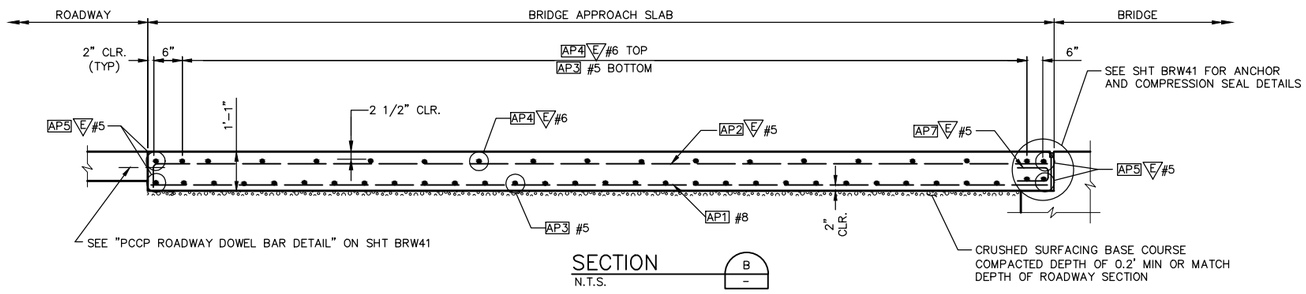

SECTION B – N.T.S.

BENDING DIAGRAM (ALL DIMENSIONS ARE OUT TO OUT)

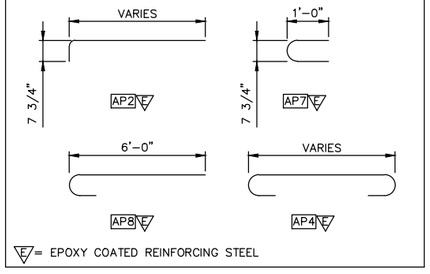

GENERAL NOTES:

1. ALL EDGES OF BRIDGE APPROACH SLAB SHALL HAVE 1/2" RADIUS EXCEPT AT LONGITUDINAL JOINTS.
2. LONGITUDINAL JOINTS SHALL BE PLACED ALONG B–LINE CONSTRUCTED AND SEALED IN ACCORDANCE WITH STD. SPEC. SECTION 5–05.3(8). JOINTS MAY BE EITHER A SAWCUT CRACK CONTROL JOINT OR A CONSTRUCTION JOINT. SAWCUT JOINTS SHALL TERMINATE 1'–0" BEFORE REACHING EDGE OF SLAB AND MUST BE SAWCUT AS SOON AS POSSIBLE AFTER PLACEMENT OF CONCRETE. SEE "LONGITUDINAL JOINT DETAIL" ON SHEET BRW41.
3. THE MINIMUM LAP SPLICE OF #5 IS 2'–0", #5 IS 2'–6", #6 IS 3'–0", AND #8 IS 3'–3". ALL LAP SPLICES SHALL BE STAGGERED SO THAT NO MORE THAN 50% OF REBAR IS SPLICED AT THE SAME LOCATION. LAP SPLICES SHALL BE LOCATED WITHIN THE MIDDLE HALF OF THE BRIDGE APPROACH SLAB. OPTIONAL SPLICES ARE ALLOWED FOR AP4 #6.
4. BAR BENDS, LENGTH, AND QUANTITIES SHOWN FOR REFERENCE. CONTRACTOR SHALL VERIFY ALL DIMENSIONS, LENGTHS, AND QUANTITIES.
5. ABUTMENT 1 APPROACH SLABS TO BE CONSTRUCTED UNDER FUTURE CONTRACT.

ROBERT D. RICHARDSON STATE OF WASHINGTON 33999 REGISTERED PROFESSIONAL ENGINEER

NO.	DATE	BY	APPR.	REVISIONS

Approved By

TRANSPORTATION DESIGN MANAGER DATE
S. COSTA
PROJECT MANAGER DATE

E. CLARK
DESIGNED BY DATE
H. GONSIOR
DRAWN BY DATE
R. RICHARDSON
CHECKED BY DATE

City of Bellevue
TRANSPORTATION DEPARTMENT

HDR

NE SPRING BLVD - ZONE 1B
90% DESIGN

WEST BRIDGE
APPROACH SLAB PLAN & DETAILS 1 OF 2

SHEET NAME **BRW40**

SHT 139 OF 185

90% SUBMITTAL NOT FOR CONSTRUCTION

GENERAL NOTES:
1. UNLESS OTHERWISE NOTED, ALL DIMENSIONS ARE IN FEET AND INCHES.

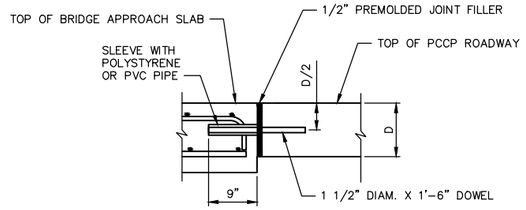

PCCP ROADWAY DOWEL BAR DETAIL
N.T.S.
INSERT DOWELS PARALLEL TO CENTER LINE ALONG TRANSVERSE CONSTRUCTION JOINT.

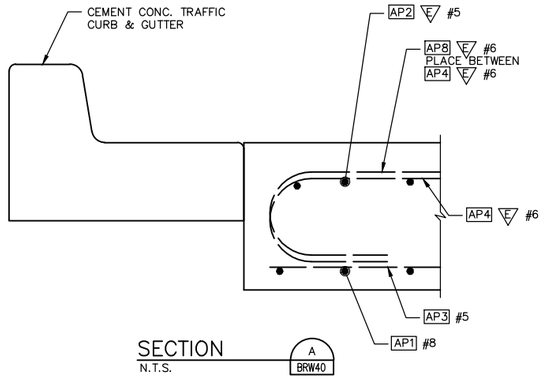

SECTION
N.T.S.
A
BRW40

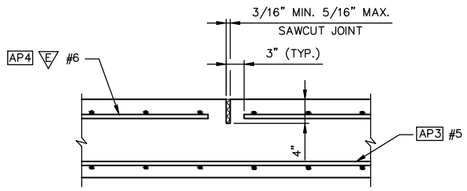

LONGITUDINAL JOINT DETAIL
N.T.S.

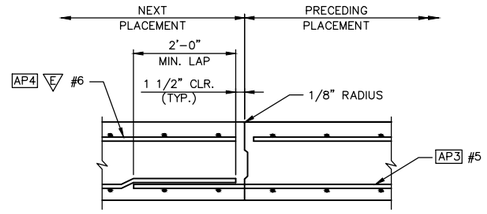

ALTERNATE LONGITUDINAL JOINT DETAIL
N.T.S.
EDGE PRECEDING PLACEMENT ONLY WITH 1/8" RADIUS

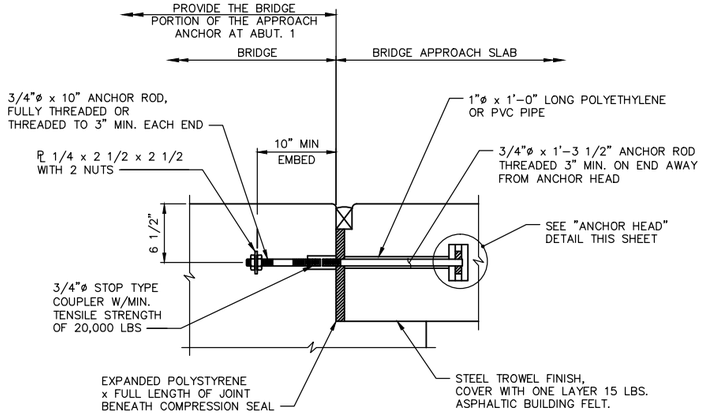

APPROACH ANCHOR – METHOD A
N.T.S.

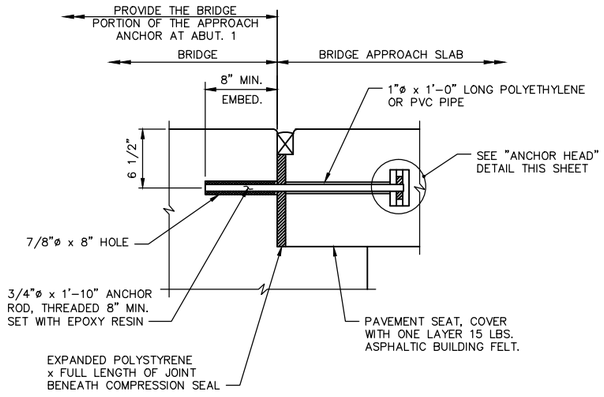

APPROACH ANCHOR – METHOD B
N.T.S.

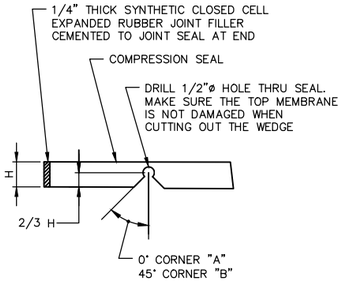

SEAL CUTTING DETAIL
N.T.S.

COMPRESSION SEAL TABLE

D.S. BROWN		WATSON BOWMAN ACME	
SEAL	W (in.)	SEAL	W (in.)
CV-2502	2 1/2"	WA-250	2 1/2"

TESTING SHALL BE PER AASHTO M-220 PRIOR TO USE.

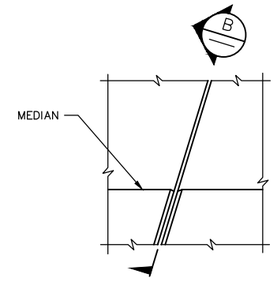

PLAN EXPANSION JOINT
N.T.S.

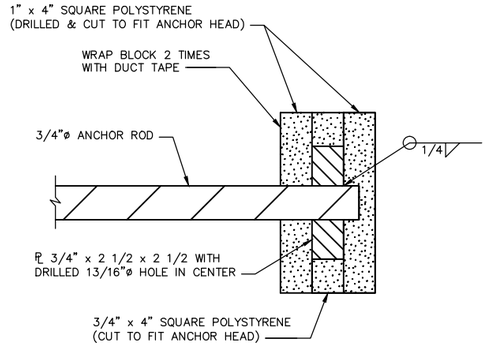

ANCHOR HEAD DETAIL
N.T.S.
ALL METAL PARTS OF APPROACH EXPANSION ANCHOR SHALL RECEIVE ONE COAT OF PAINT CONFORMING TO 9-08.1(2)F, OR BE GALVANIZED IN ACCORDANCE WITH AASHTO M232.

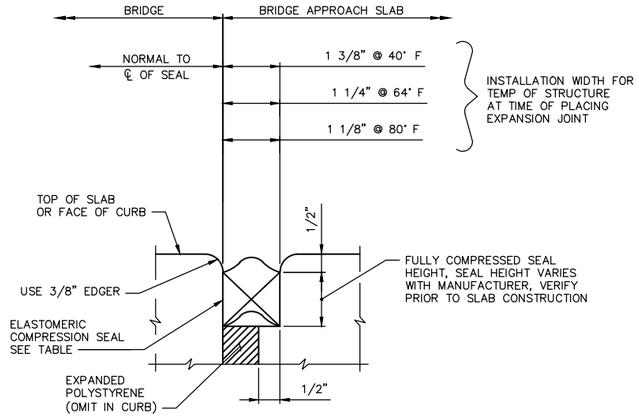

COMPRESSION SEAL DETAIL
N.T.S.
EXPANSION JOINT AT BACK OF PVMT SEAT

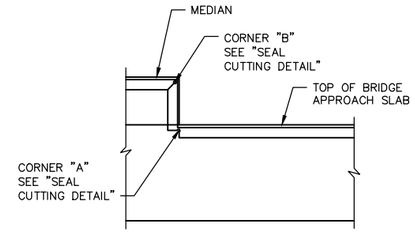

SECTION
N.T.S.
B

ROBERT D. RICHARDSON STATE OF WASHINGTON 33999 REGISTERED PROFESSIONAL ENGINEER

NO.	DATE	BY	APPR.	REVISIONS

Approved By

TRANSPORTATION DESIGN MANAGER — DATE
S. COSTA
PROJECT MANAGER — DATE

E. CLARK — DESIGNED BY — DATE
H. GONSIOR — DRAWN BY — DATE
R. RICHARDSON — CHECKED BY — DATE

City of Bellevue
TRANSPORTATION DEPARTMENT

HDR

NE SPRING BLVD - ZONE 1B
90% DESIGN

WEST BRIDGE
APPROACH SLAB DETAILS 2 OF 2

SHEET NAME BRW41

SHT 140 OF 185

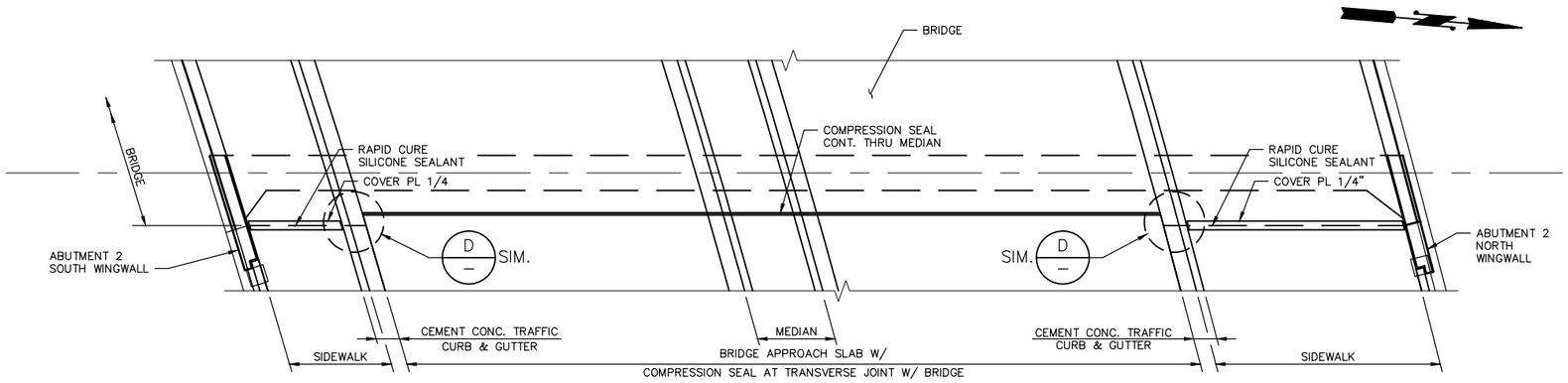

PLAN – ABUTMENT 2 EXPANSION JOINT

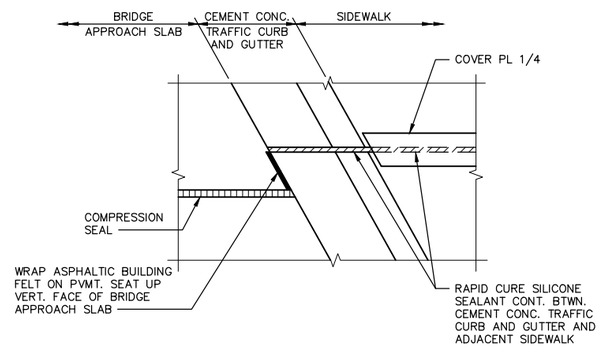

DETAIL D

SCALE: 3/4" = 1'–0"

GAP TABLE	
GAP WIDTH	TEMPERATURE
1 3/8"	40°
1 1/4"	64°
1 1/8"	80°

NOTE:
GAP WIDTH = INSTALLATION WIDTH FOR TEMPERATURE OF STRUCTURE AT TIME OF PLACING EXPANSION JOINT.

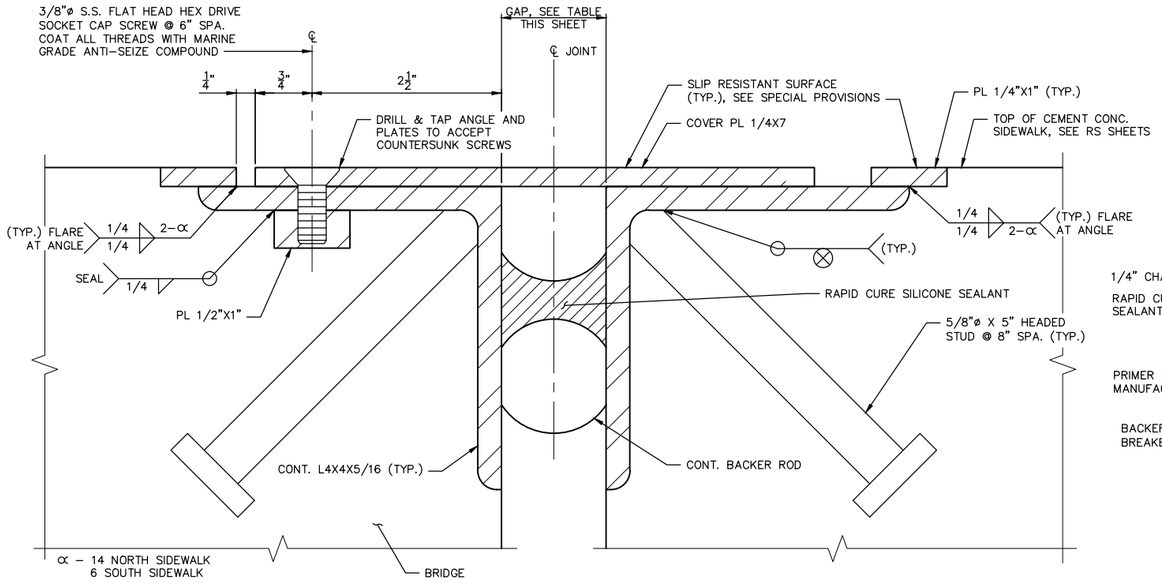

EXPANSION JOINT DETAIL AT SIDEWALKS

FOR INFORMATION NOT SHOWN, SEE EXPANSION JOINT DETAIL AT CURB AND GUTTER ON THIS SHEET.

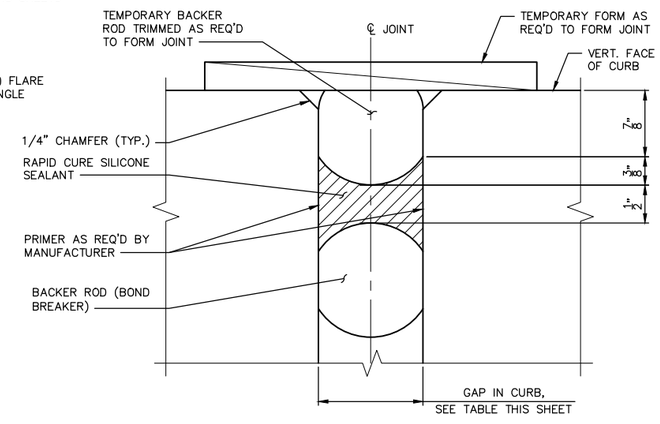

EXPANSION JOINT PLACEMENT AT VERTICAL FACE OF CURB

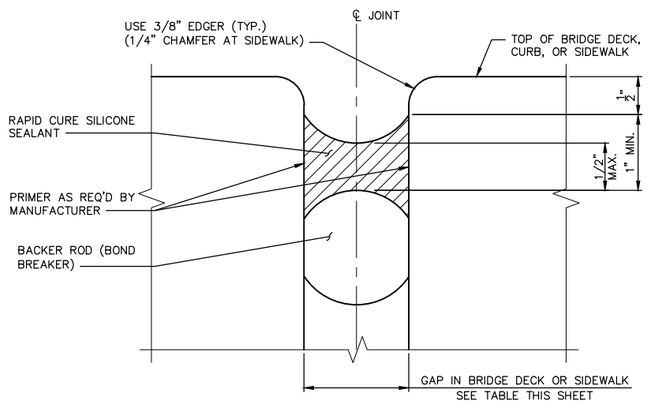

EXPANSION JOINT DETAIL AT CURB AND GUTTER

RODNEY D. RICHARDSON — STATE OF WASHINGTON — 33999 — REGISTERED PROFESSIONAL ENGINEER

NO.	DATE	BY	APPR.	REVISIONS

Approved By

TRANSPORTATION DESIGN MANAGER — DATE
S. COSTA
PROJECT MANAGER — DATE

E. CLARK — DESIGNED BY — DATE
H. GONSIOR — DRAWN BY — DATE
R. RICHARDSON — CHECKED BY — DATE

City of Bellevue
TRANSPORTATION DEPARTMENT

HDR

NE SPRING BLVD - ZONE 1B
90% DESIGN

WEST BRIDGE
EXPANSION JOINT DETAILS

SHEET NAME BRW42

SHT 141 OF 185

S = BAR IS INCLUDED IN SUBSTRUCTURE QUANTITIES
L = LUMP SUM QUANTITY
T = TRANSVERSE
OR S = SEISMIC
G = BAR IS TO BE GALVANIZED
V = BAR DIMENSIONS VARY BETWEEN DIMENSIONS SHOWN ON THIS LINE AND THE FOLLOWING LINE.

MARK NO.	LOCATION	SIZE	NO. REQ'D	BEND TYPE	TIE OR STIR.	LUMP SUM	SUBSTR.	GALVANIZED	VARIES	NO. EACH	DIMENSIONS (OUT TO OUT) U		W		X		Y		Z	θ_1	θ_2	LENGTH		WEIGHT
											Ft.	In.	Ft.	In.	Ft.	In.	Ft.	In.	Ft.	In.	DEG	DEG	Ft.	In.	

S = BAR IS INCLUDED IN SUBSTRUCTURE QUANTITIES
L = LUMP SUM QUANTITY
T = TRANSVERSE
OR S = SEISMIC
G = BAR IS TO BE GALVANIZED
V = BAR DIMENSIONS VARY BETWEEN DIMENSIONS SHOWN ON THIS LINE AND THE FOLLOWING LINE.

MARK NO.	LOCATION	SIZE	NO. REQ'D	BEND TYPE	TIE OR STIR.	LUMP SUM	SUBSTR.	GALVANIZED	VARIES	NO. EACH	DIMENSIONS (OUT TO OUT) U		W		X		Y		Z	θ_1	θ_2	LENGTH		WEIGHT
											Ft.	In.	Ft.	In.	Ft.	In.	Ft.	In.	Ft.	In.	DEG	DEG	Ft.	In.	

90% SUBMITTAL NOT FOR CONSTRUCTION

BENDING DIAGRAMS

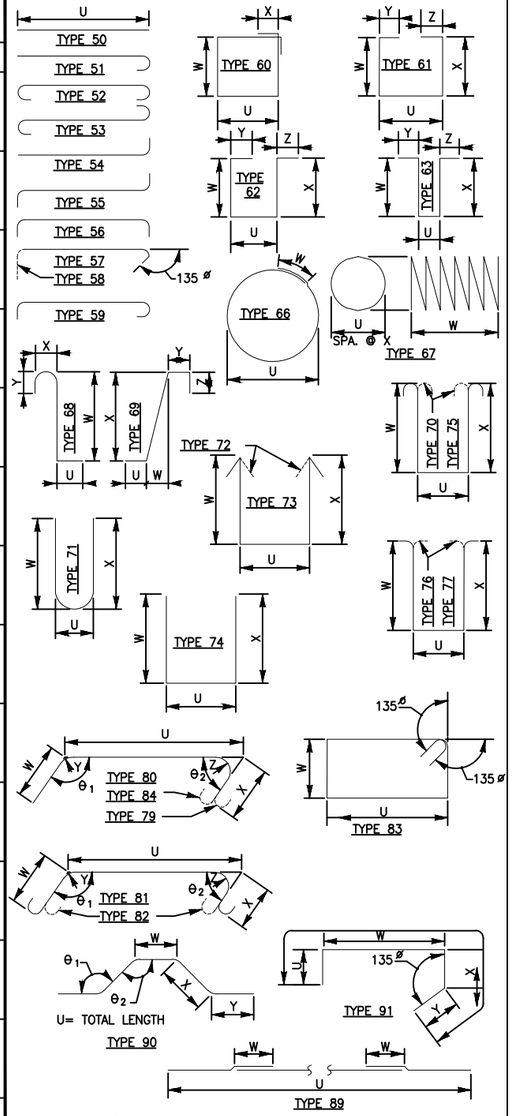

NOTES:

1. SEE SHT ___ FOR ADDITIONAL DETAILS FOR BARRIER AND SIDEWALK.
2. SEE SHT ___ FOR ADDITIONAL DETAILS FOR APPROACH SLAB.
3. BEND FOR TRANSVERSE BARS DUE TO ROADWAY CROWN CONDITIONS HAVE NOT BEEN SHOWN. THESE BARS SHALL BE BENT AS REQUIRED TO CONFORM TO THE CONFIGURATION OF THE STRUCTURE.

ROBERT D. RICHARDSON STATE OF WASHINGTON 33999 REGISTERED PROFESSIONAL ENGINEER

NO.	DATE	BY	APPR.	REVISIONS

Approved By

TRANSPORTATION DESIGN MANAGER DATE
S. COSTA
PROJECT MANAGER DATE

E. CLARK
DESIGNED BY DATE
H. GONSIOR
DRAWN BY DATE
R. RICHARDSON
CHECKED BY DATE

City of Bellevue
TRANSPORTATION DEPARTMENT

HDR

NE SPRING BLVD - ZONE 1B
90% DESIGN

WEST BRIDGE
BAR LIST 1 OF 2

SHEET NAME BRW43

SHT 142 OF 185

S = BAR IS INCLUDED IN SUBSTRUCTURE QUANTITIES
L = LUMP SUM QUANTITY
T = TRANSVERSE
OR S = SEISMIC
G = BAR IS TO BE GALVANIZED
V = BAR DIMENSIONS VARY BETWEEN DIMENSIONS SHOWN ON THIS LINE AND THE FOLLOWING LINE.

MARK NO.	LOCATION	SIZE	NO. REQ'D	BEND TYPE	TIE OR STIR.	LUMP SUM	SUBSTR.	GALVANIZED	VARIES	NO. EACH	DIMENSIONS (OUT TO OUT) U		W		X		Y		Z	θ_1	θ_2	LENGTH		WEIGHT
											Ft.	In.	Ft.	In.	Ft.	In.	Ft.	In.	Ft.	In.	DEG	DEG	Ft.	In.	

S = BAR IS INCLUDED IN SUBSTRUCTURE QUANTITIES
L = LUMP SUM QUANTITY
T = TRANSVERSE
OR S = SEISMIC
G = BAR IS TO BE GALVANIZED
V = BAR DIMENSIONS VARY BETWEEN DIMENSIONS SHOWN ON THIS LINE AND THE FOLLOWING LINE.

MARK NO.	LOCATION	SIZE	NO. REQ'D	BEND TYPE	TIE OR STIR.	LUMP SUM	SUBSTR.	GALVANIZED	VARIES	NO. EACH	DIMENSIONS (OUT TO OUT) U		W		X		Y		Z	θ_1	θ_2	LENGTH		WEIGHT
											Ft.	In.	Ft.	In.	Ft.	In.	Ft.	In.	Ft.	In.	DEG	DEG	Ft.	In.	

90% SUBMITTAL NOT FOR CONSTRUCTION

BENDING DIAGRAMS

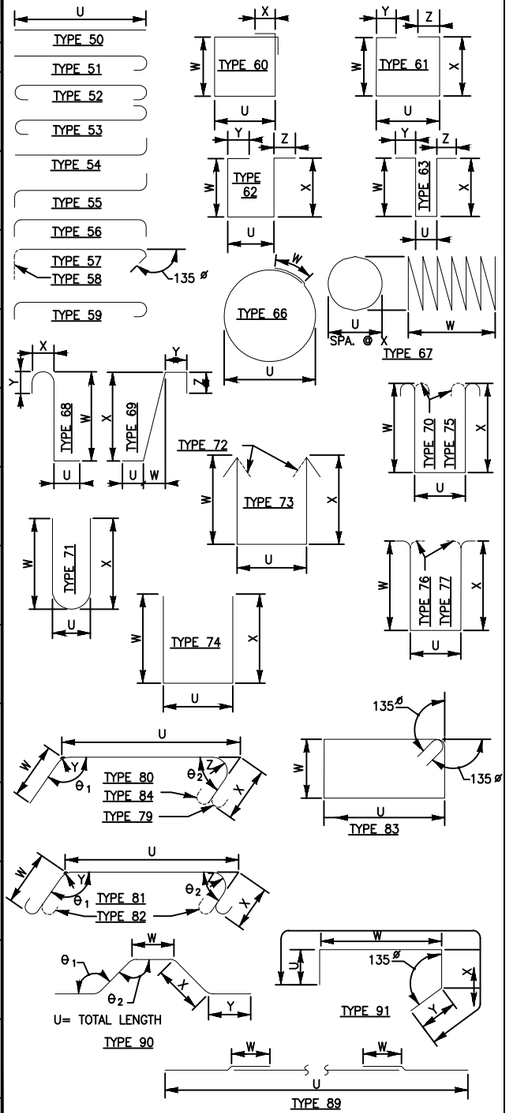

NOTES:

1. SEE SHT ___ FOR ADDITIONAL DETAILS FOR BARRIER AND SIDEWALK.
2. SEE SHT ___ FOR ADDITIONAL DETAILS FOR APPROACH SLAB.
3. BEND FOR TRANSVERSE BARS DUE TO ROADWAY CROWN CONDITIONS HAVE NOT BEEN SHOWN. THESE BARS SHALL BE BENT AS REQUIRED TO CONFORM TO THE CONFIGURATION OF THE STRUCTURE.

ROBERT D. RICHARDSON STATE OF WASHINGTON 33999 REGISTERED PROFESSIONAL ENGINEER

NO.	DATE	BY	APPR.	REVISIONS

Approved By

TRANSPORTATION DESIGN MANAGER DATE
S. COSTA
PROJECT MANAGER DATE

E. CLARK
DESIGNED BY DATE
H. GONSIOR
DRAWN BY DATE
R. RICHARDSON
CHECKED BY DATE

City of Bellevue
TRANSPORTATION DEPARTMENT

HDR

NE SPRING BLVD - ZONE 1B
90% DESIGN

WEST BRIDGE
BAR LIST 2 OF 2

SHEET NAME BRW44

SECTION 28, T. 25 N., R5E., W.M.
KING COUNTY

90% SUBMITTAL NOT FOR CONSTRUCTION
MINIMALLY PROGRESSED FROM 60% SUBMITTAL – AWAITING DIRECTION FROM SOUND TRANSIT

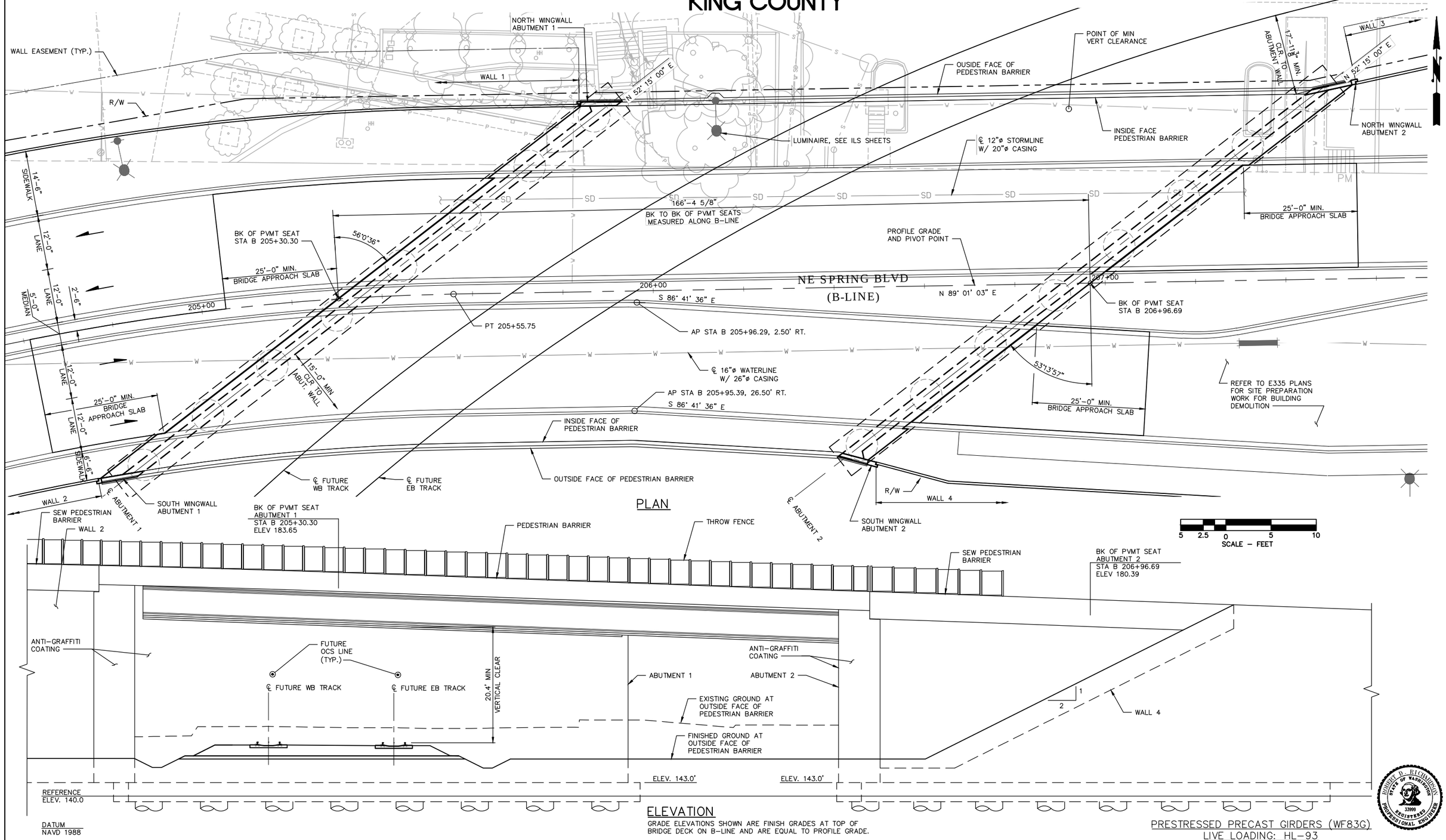

NO.	DATE	BY	APPR.	REVISIONS

Approved By

TRANSPORTATION DESIGN MANAGER — DATE
S. COSTA
PROJECT MANAGER — DATE

E. CLARK — DESIGNED BY — DATE
H. GONSIOR — DRAWN BY — DATE
R. RICHARDSON — CHECKED BY — DATE

City of Bellevue
TRANSPORTATION DEPARTMENT

HDR

NE SPRING BLVD - ZONE 1B
90% DESIGN

EAST BRIDGE
PLAN & PROFILE

SHEET NAME **BRE1**

SHT 144 OF 185

ROBERT D. RICHARDSON — STATE OF WASHINGTON — 33999 — REGISTERED PROFESSIONAL ENGINEER

NE SPRING BLVD VERTICAL PROFILE

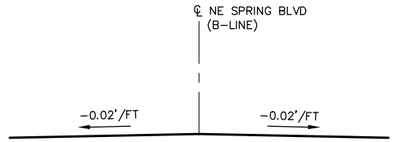

BRIDGE/ROADWAY CROSS SLOPE

HORIZONTAL CURVE DATA					
P.I. STATION	DELTA	RADIUS	TANGENT	LENGTH	BACK TANGENT BEARING
B 203+73.13	41°49'16" RT	525'	200.59'	383.21'	N 47°11'47.10" E

GENERAL NOTES:

1. ALL MATERIALS AND WORKMANSHIP SHALL BE IN ACCORDANCE WITH THE REQUIREMENTS OF THE WASHINGTON STATE DEPARTMENT OF TRANSPORTATION STANDARD SPECIFICATIONS FOR ROAD, BRIDGE AND MUNICIPAL CONSTRUCTION, DATED 2014, AND AMENDMENTS.
2. THE STRUCTURE HAS BEEN DESIGNED IN ACCORDANCE WITH THE REQUIREMENTS OF THE AASHTO LRFD BRIDGE DESIGN SPECIFICATIONS SEVENTH EDITION–2014 AND INTERIMS, AND THE SOUND TRANSIT LINK DESIGN CRITERIA MANUAL (DCM) REVISION 2, JULY 2012. STRUCTURAL ELEMENTS ARE DESIGNED IN ACCORDANCE WITH THE REQUIREMENTS FOR LRFD. SEISMIC DESIGN HAS BEEN PERFORMED USING THE FOLLOWING SEISMIC PARAMETERS:

SEISMIC DESIGN PARAMETERS			
SEISMIC DESIGN CASE	OPERATING DESIGN EARTHQUAKCE (ODE) 150–YEAR RETURN PERIOD	MAXIMUM DESIGN EARTHQUAKE (MDE) 2,500–YEAR RETURN PERIOD	AASHTO/WSDOT 1,000–YEAR RETURN PERIOD
(Fpga)(PGA)=As	(1.2)(0.176)=0.211	(1.0)(0.594)=0.594	(1.0)(0.426)=0.426
(Fa)(Ss)=SDs	(1.2)(0.386)=0.463	(1.0)(1.341)=1.341	(1.02)(0.954)=0.973
(Fv)(S1)=SD1	(1.68)(0.12)=0.202	(1.35)(0.454)=0.613	(1.48)(0.317)=0.469
SITE CLASS	C	C	C
kh (DESIGN)	0.211 (NO REDUCTION OF As)	0.297 (50% REDUCTION OF As)	0.213 (50% REDUCTION OF As)

3. CONCRETE IN THE BRIDGE DECK SHALL BE CONC CL 4000D. CONCRETE IN THE BRIDGE APPROACH SLAB SHALL BE CONC CL 4000A. SHAFTS SHALL BE CONC CL 4000. ALL OTHER CAST–IN–PLACE CONCRETE SHALL BE CLASS 4000 UNLESS NOTED OTHERWISE.
4. UNLESS OTHERWISE SHOWN ON THE PLANS, THE CONCRETE COVER MEASURED FROM THE FACE OF THE CONCRETE TO THE FACE OF ANY REINFORCING BAR SHALL BE AS FOLLOWS:

TOP OF BRIDGE DECK	2½"
BOTTOM OF BRIDGE DECK	1"
CONCRETE CAST AGAINST EARTH	3"
CONCRETE EXPOSED TO EARTH OR WEATHER:	
PRIMARY REINFORCEMENT	2"
SECONDARY REINFORCEMENT (TIES OR STIRRUPS)	1½"

5. ALL EXISTING DIMENSIONS AND EXISTING ELEVATIONS SHALL BE VERIFIED IN THE FIELD BY THE CONTRACTOR.
6. DRILLED SHAFTS HAVE BEEN DESIGNED USING THE FOLLOWING NOMINAL RESISTANCES FOR THE STRENGTH, EXTREME AND SERVICE LIMIT STATES.

LIMIT STATE	SKIN FRICTION RESISTANCE (KIP)	END BEARING RESISTANCE (KIP)
STRENGTH & SERVICE		
EXTREME		

SEE GEOTECH REPORT.

7. THE UTILITY ℄ ARE SHOWN FOR REFERENCE ONLY, THE CONTRACTOR SHALL COORDINATE THESE PLANS WITH THE RELEVANT UTILITY PLAN SHEETS.
8. THE EXPOSED EXTERIOR SURFACE OF WINGWALLS, BRIDGE GIRDERS, END DIAPHRAGMS, PILE CAP, & ABUTMENTS SHALL BE PIGMENTED SEALED TO THE LIMITS SHOWN ON THE PLANS.
9. [NXX] OR [NN] INDICATES BAR MARK NUMBER.
10. E/ INDICATES EPOXY COATED BAR
11. DESIGN DEAD LOAD:
    WATERLINE XXX LB/LF
    STORM DRAIN XXX LB/LF
12. ALL STEEL REINF. SHALL CONFORM TO ASTM A706 UNLESS NOTED OTHERWISE.
13. DEAD LOAD INCLUDES ADDITIONAL WEARING SURFACE OF 25 POUNDS PER SQUARE FOOT.
14. FALSE WORK SHALL BE CAREFULLY RELEASED TO PREVENT IMPACT OR UNDUE STRESS IN THE STRUCTURE.
15. CONDUITS, JUNCTION BOXES, AND UTILITIES ARE SHOWN FOR REFERENCE ONLY. CONTRACTOR SHALL COORDINATE THESE PLANS WITH OTHER CIVIL PLANS.

LEGEND:

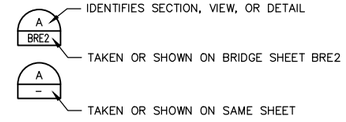

NO.	DATE	BY	APPR.	REVISIONS

Approved By

TRANSPORTATION DESIGN MANAGER DATE
S. COSTA
PROJECT MANAGER DATE

E. CLARK
DESIGNED BY DATE
H. GONSIOR
DRAWN BY DATE
R. RICHARDSON
CHECKED BY DATE

City of Bellevue
TRANSPORTATION DEPARTMENT

HDR

NE SPRING BLVD - ZONE 1B
90% DESIGN

EAST BRIDGE
GENERAL NOTES

SHEET NAME **BRE2**

SHT 145 OF 185

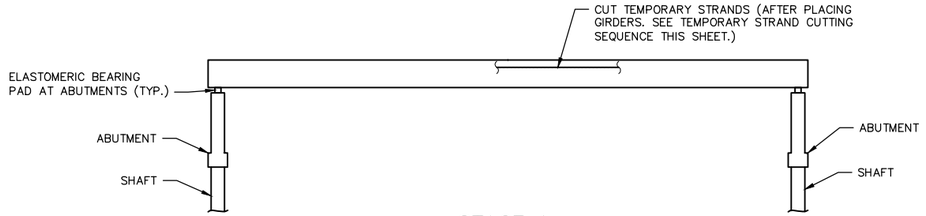

STAGE 1
SET GIRDERS IN PLACE

1. PRIOR TO ERECTING SUPERSTRUCTURE, PLACE SHAFTS, BRIDGE ABUTMENTS, AND ANY FALSEWORK REQUIRED.
2. INSTALL TEMPORARY BRACING FOR ERECTION IN ACCORDANCE WITH STD. SPEC. SECTION 6–02.3(17)F.

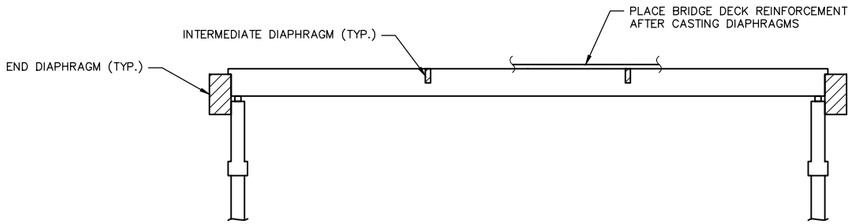

STAGE 2
CAST DIAPHRAGMS AND PLACE BRIDGE DECK REINFORCEMENT

INSTALL TEMPORARY BRACING FOR DIAPHRAGM AND BRIDGE DECK PLACEMENT IN ACCORDANCE WITH STD. SPEC. SECTION 6–02.3(17)F.

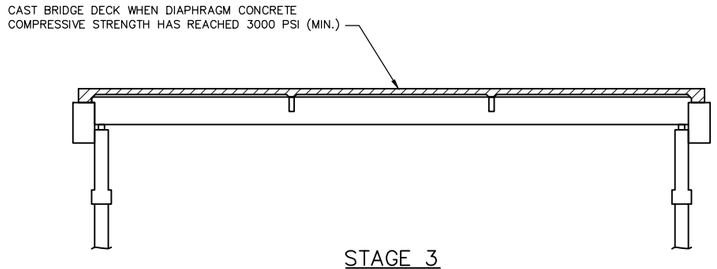

STAGE 3
CAST BRIDGE DECK

PLACE BRIDGE DECK CONCRETE IN A CONTINUOUS POUR.

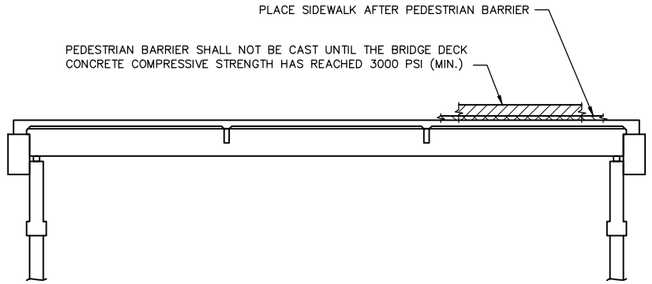

STAGE 4
PLACE PEDESTRIAN BARRIER & SIDEWALK

CONSTRUCTION SEQUENCE ~ SUPERSTRUCTURE

TEMPORARY STRAND CUTTING SEQUENCE:

1. ERECT AND BRACE GIRDERS.
2. REMOVE EXPANDED POLYSTYRENE IN 2" x 6" RECESSES IN TOP FLANGE OF GIRDERS.
3. CUT STRANDS IN 2"x 6"RECESSES. STRANDS MAY BE CUT BY USING A CUTTING TORCH AND MOVING THE FLAME BACK AND FORTH OVER THE LENGTH OF EXPOSED STRAND TO LET INDIVIDUAL WIRES BREAK ONE AT A TIME TO LESSEN THE SHOCK TO THE GIRDER. STRANDS SHALL BE RELEASED IN A SYMMETRICAL MANNER AROUND THE GIRDER CENTERLINE STARTING WITH THOSE NEAREST THE CENTERLINE AND WORKING OUTWARDS.
4. DO NOT ALLOW ANY MOISTURE TO ENTER THE RECESS. REMOVE ALL MOISTURE IN RECESS PRIOR TO FILLING RECESS WITH GROUT.
5. WITHIN 24 HOURS OF CUTTING THE TEMPORARY STANDS, FILL THE RECESS WITH A GROUT CONFOMRING TO STD. SPEC. 9–20.3(a).

ROBERT D. RICHARDSON — STATE OF WASHINGTON — 33999 — REGISTERED PROFESSIONAL ENGINEER

NO.	DATE	BY	APPR.	REVISIONS

Approved By

TRANSPORTATION DESIGN MANAGER — DATE

S. COSTA
PROJECT MANAGER — DATE

E. CLARK — DESIGNED BY — DATE
H. GONSIOR — DRAWN BY — DATE
R. RICHARDSON — CHECKED BY — DATE

City of Bellevue
TRANSPORTATION DEPARTMENT

HDR

NE SPRING BLVD - ZONE 1B
90% DESIGN

EAST BRIDGE CONSTRUCTION SEQUENCE

SHEET NAME **BRE3**

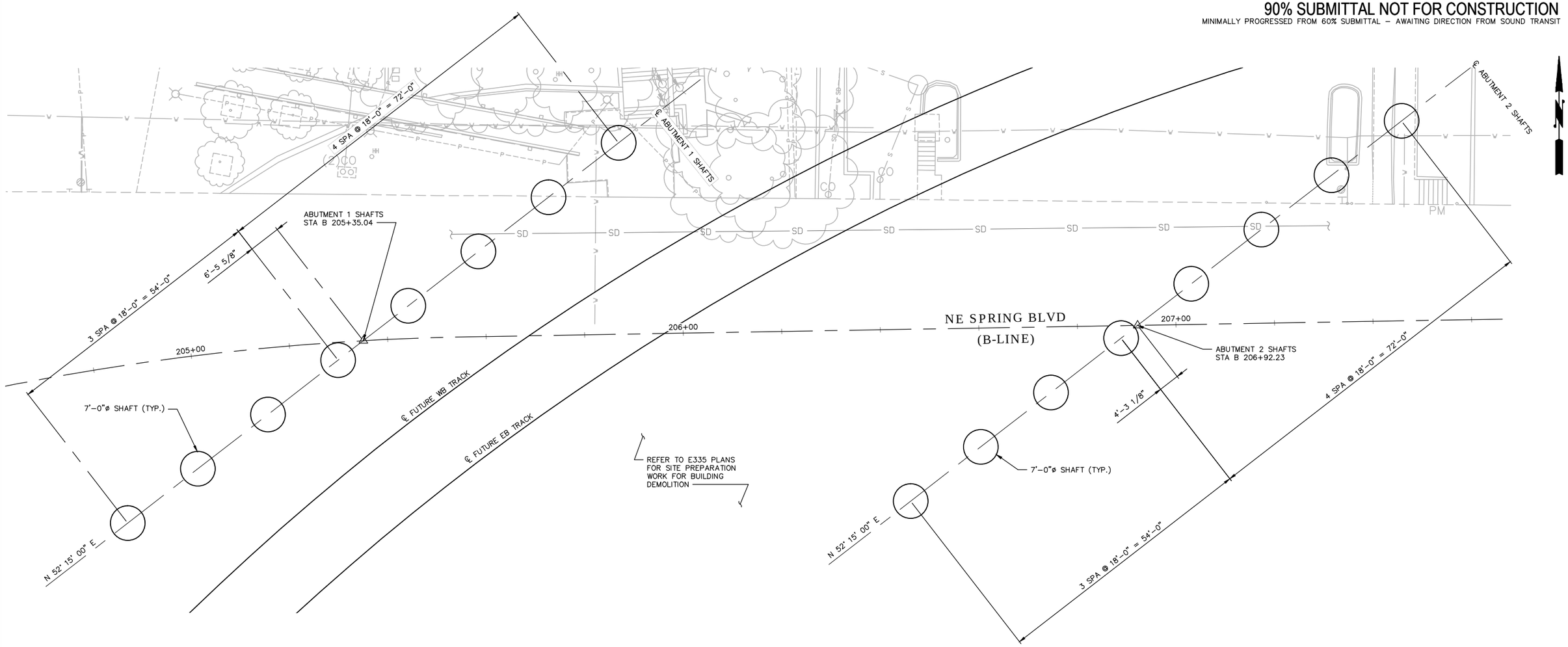

FOUNDATION LAYOUT

10 5 0 10 20
SCALE – FEET

ROBERT D. RICHARDSON
STATE OF WASHINGTON
33999
REGISTERED
PROFESSIONAL ENGINEER

NO.	DATE	BY	APPR.	REVISIONS

Approved By

TRANSPORTATION DESIGN MANAGER DATE
S. COSTA
PROJECT MANAGER DATE

E. CLARK
DESIGNED BY DATE
H. GONSIOR
DRAWN BY DATE
R. RICHARDSON
CHECKED BY DATE

City of Bellevue
TRANSPORTATION DEPARTMENT

HDR

NE SPRING BLVD - ZONE 1B
90% DESIGN

EAST BRIDGE
FOUNDATION LAYOUT

SHEET NAME **BRE4**

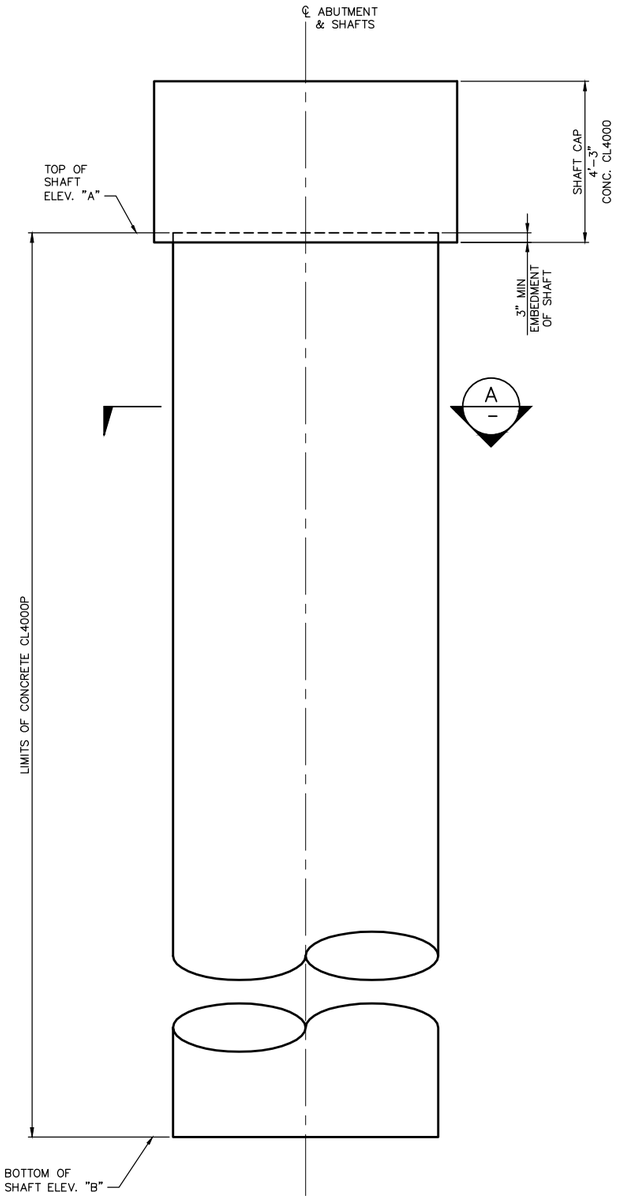

SHAFT ELEVATION
N.T.S.

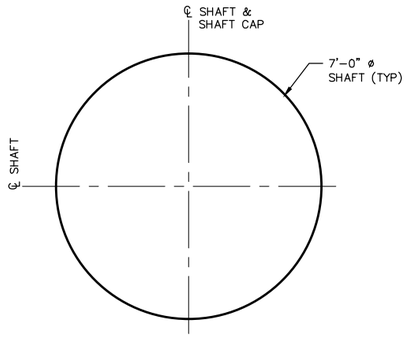

SECTION A–
N.T.S.

SHAFT SCHEDULE		
SHAFTS	TOP OF SHAFT ELEV. 'A' (FT)	BOTTOM OF SHAFT ELEV. 'B' (FT)
ABUTMENT 1	139.0	74.0
ABUTMENT 2	139.0	74.0

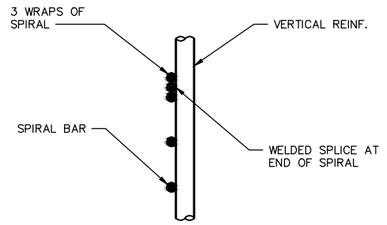

SPIRAL TERMINATION DETAIL
N.T.S.

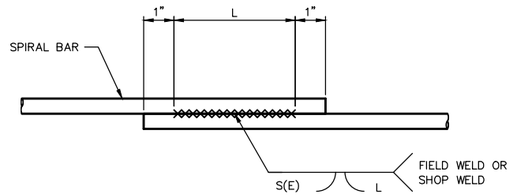

SPIRAL WELDED LAP SPLICE DETAIL
N.T.S.
WELDING SHALL MEET THE REQUIREMENTS OF STD. SPEC. 6–02.3(24)E.
FOR WELD DIMENSIONS, SEE TABLE BELOW.

	WELD DIMENSIONS (INCHES)		
BAR SIZE	S	E	LENGTH (L)
#6	3/8	3/16	6"

SHAFT BAR LIST				
MARK	SIZE	QTY. (PER SHAFT)	LENGTH, L (OUT TO OUT)	TOTAL WEIGHT (PER SHAFT)
P1				
P2				
P3				

WEIGHTS DO NOT INCLUDE WELDS, SPIRAL SPLICES, OR LONGITUDINAL SPLICES

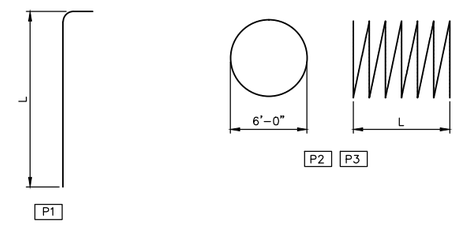

ROBERT D. RICHARDSON
STATE OF WASHINGTON
33999
REGISTERED
PROFESSIONAL ENGINEER

NO.	DATE	BY	APPR.	REVISIONS

Approved By

TRANSPORTATION DESIGN MANAGER DATE
S. COSTA
PROJECT MANAGER DATE

E. CLARK
DESIGNED BY DATE
H. GONSIOR
DRAWN BY DATE
R. RICHARDSON
CHECKED BY DATE

City of Bellevue
TRANSPORTATION DEPARTMENT

HDR

NE SPRING BLVD - ZONE 1B
90% DESIGN

EAST BRIDGE
SHAFT DETAILS

SHEET NAME **BRE5**

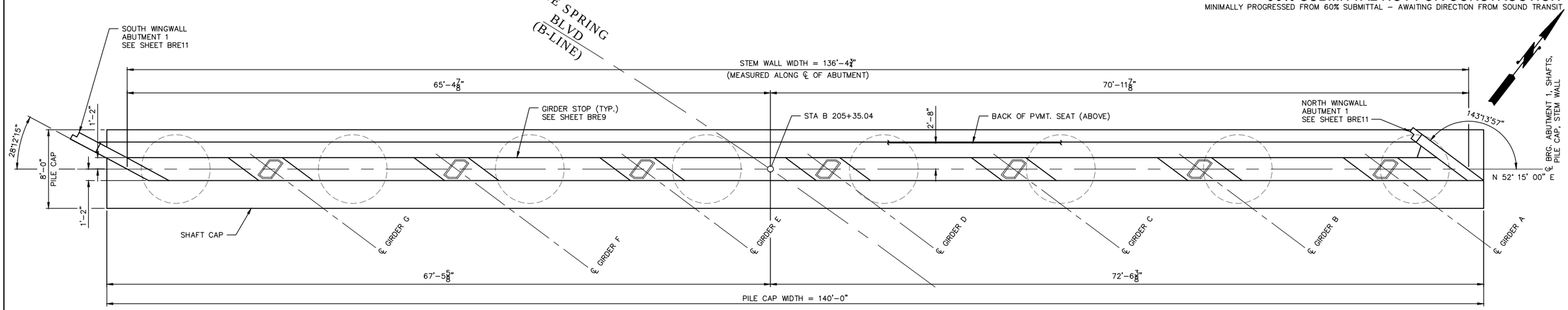

ABUTMENT 1 PLAN

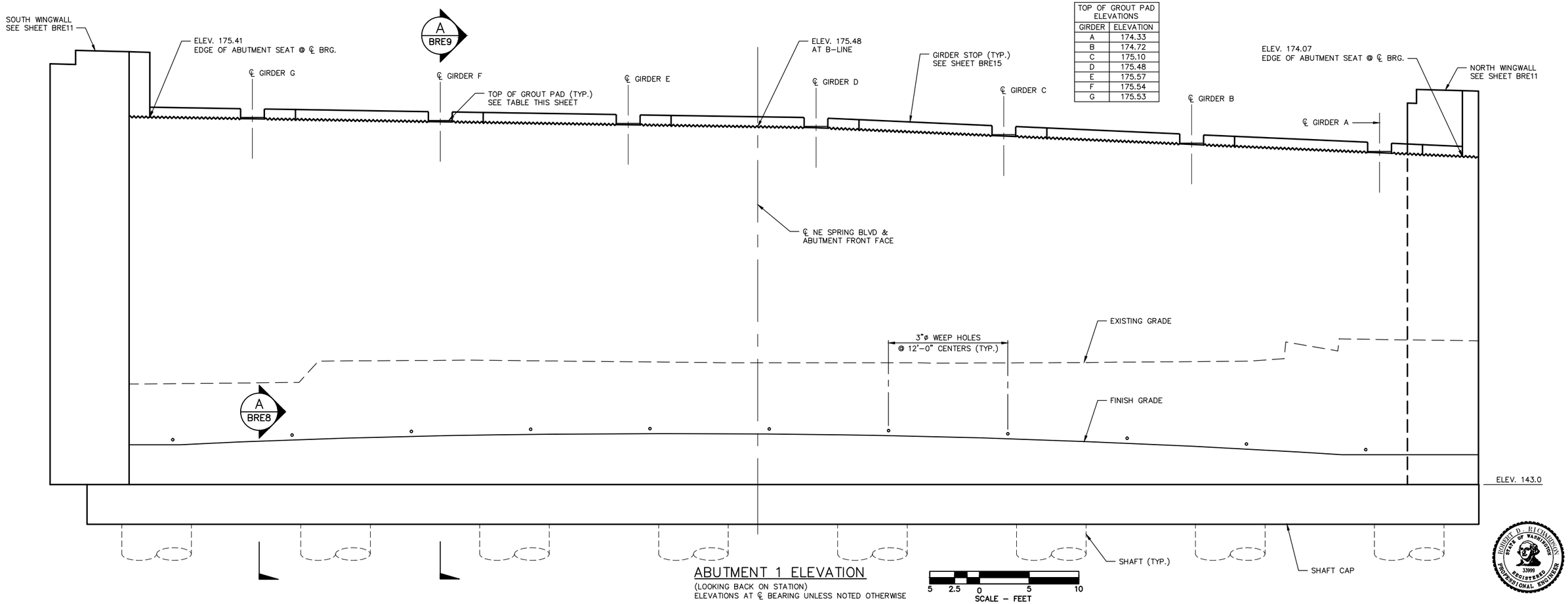

TOP OF GROUT PAD ELEVATIONS	
GIRDER	ELEVATION
A	174.33
B	174.72
C	175.10
D	175.48
E	175.57
F	175.54
G	175.53

ABUTMENT 1 ELEVATION

(LOOKING BACK ON STATION)
ELEVATIONS AT ℄ BEARING UNLESS NOTED OTHERWISE

5 2.5 0 5 10
SCALE – FEET

ROBERT D. RICHARDSON — STATE OF WASHINGTON — 33999 — REGISTERED PROFESSIONAL ENGINEER

NO.	DATE	BY	APPR.	REVISIONS

Approved By

TRANSPORTATION DESIGN MANAGER — DATE
S. COSTA
PROJECT MANAGER — DATE

E. CLARK — DESIGNED BY — DATE
H. GONSIOR — DRAWN BY — DATE
R. RICHARDSON — CHECKED BY — DATE

City of Bellevue
TRANSPORTATION DEPARTMENT

HDR

NE SPRING BLVD - ZONE 1B
90% DESIGN

EAST BRIDGE
ABUTMENT 1 PLAN & ELEVATION

SHEET NAME BRE6

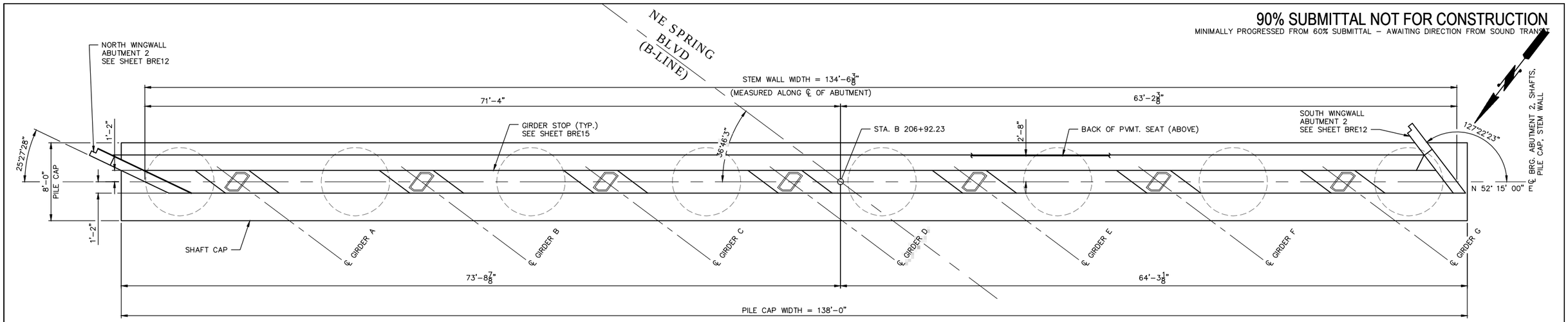

ABUTMENT 2 PLAN

A BRE9

TOP OF GROUT PAD ELEVATIONS	
GIRDER	ELEVATION
A	172.67
B	173.06
C	173.44
D	173.83
E	173.89
F	173.82
G	173.76

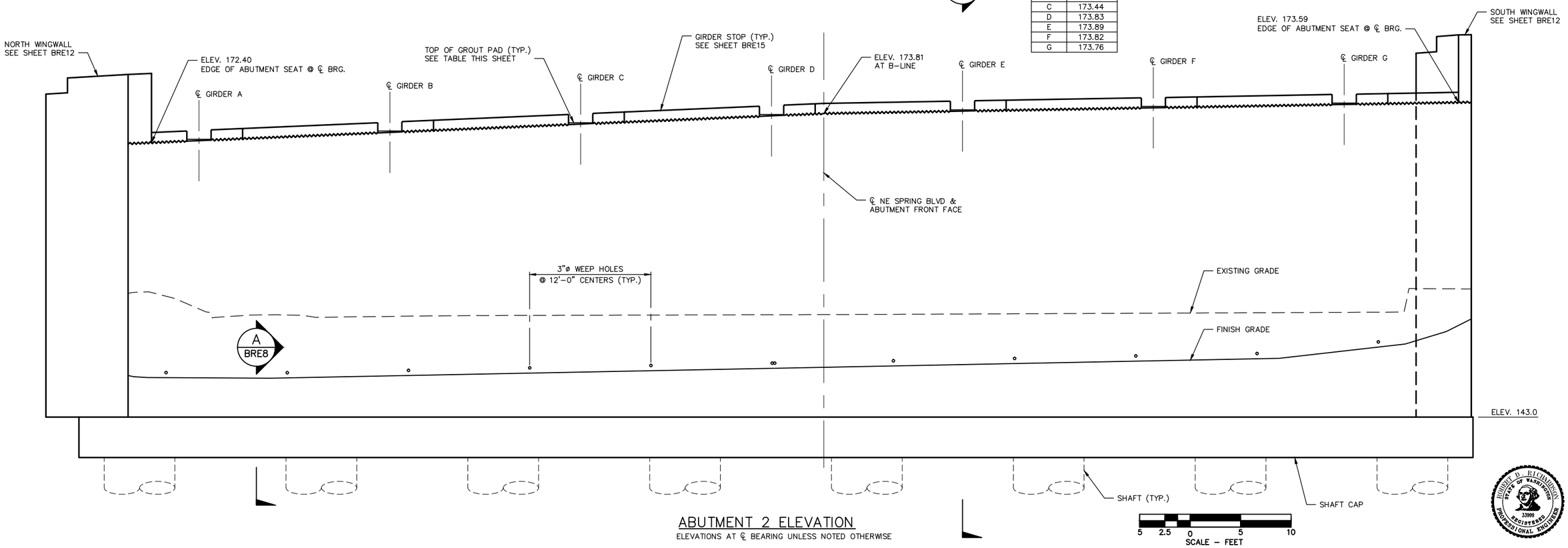

ABUTMENT 2 ELEVATION

ELEVATIONS AT ℄ BEARING UNLESS NOTED OTHERWISE

5 2.5 0 5 10
SCALE – FEET

ROBERT D. RICHARDSON STATE OF WASHINGTON 33999 REGISTERED PROFESSIONAL ENGINEER

NO.	DATE	BY	APPR.	REVISIONS

Approved By

TRANSPORTATION DESIGN MANAGER DATE
S. COSTA
PROJECT MANAGER DATE

E. CLARK
DESIGNED BY DATE
H. GONSIOR
DRAWN BY DATE
R. RICHARDSON
CHECKED BY DATE

City of Bellevue
TRANSPORTATION DEPARTMENT

HDR

NE SPRING BLVD - ZONE 1B
90% DESIGN

EAST BRIDGE
ABUTMENT 2 PLAN & ELEVATION

SHEET NAME BRE7

SHT 150 OF 185

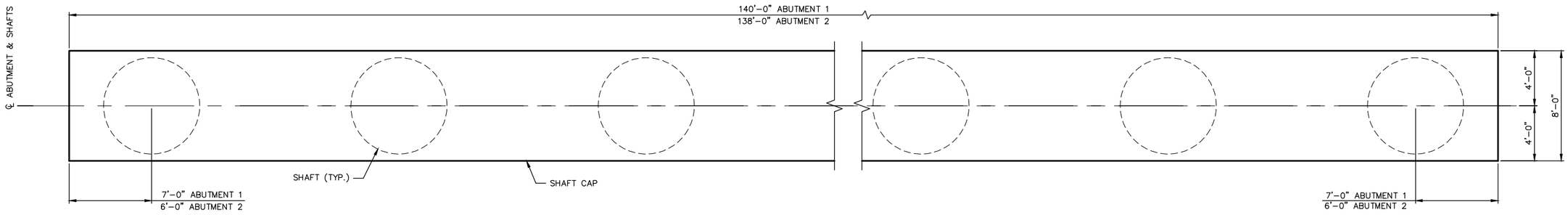

SHAFT CAP PLAN

N.T.S.
(ABUTMENT WALL NOT SHOWN FOR CLARITY)

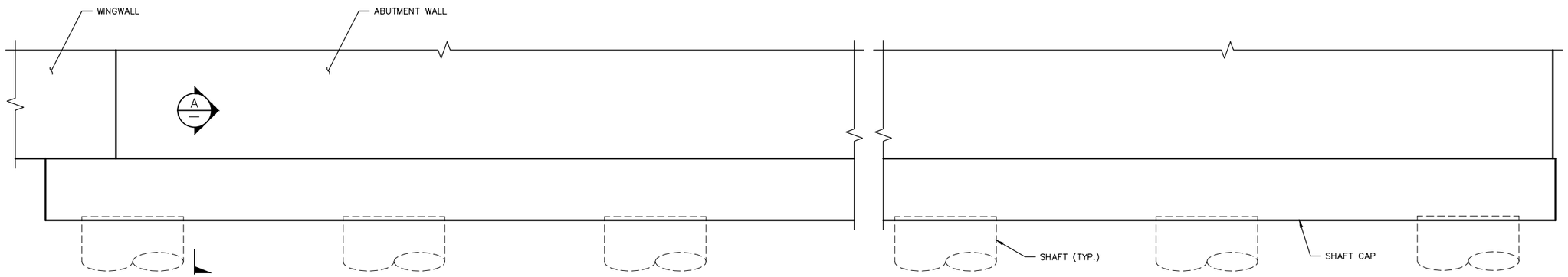

SHAFT CAP ELEVATION

N.T.S.
(ABUTMENT WALL AND SHAFT REINF. NOT SHOWN FOR CLARITY)

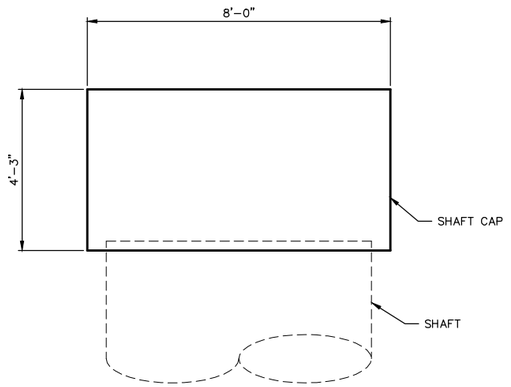

SHAFT CAP SECTION A

NO.	DATE	BY	APPR.	REVISIONS

Approved By

TRANSPORTATION DESIGN MANAGER DATE
S. COSTA
PROJECT MANAGER DATE

E. CLARK
DESIGNED BY DATE
H. GONSIOR
DRAWN BY DATE
R. RICHARDSON
CHECKED BY DATE

City of Bellevue
TRANSPORTATION DEPARTMENT

HDR

NE SPRING BLVD - ZONE 1B
90% DESIGN

EAST BRIDGE
ABUTMENT DETAILS 1 OF 3

SHEET NAME BRE8

SHT 151 OF 185

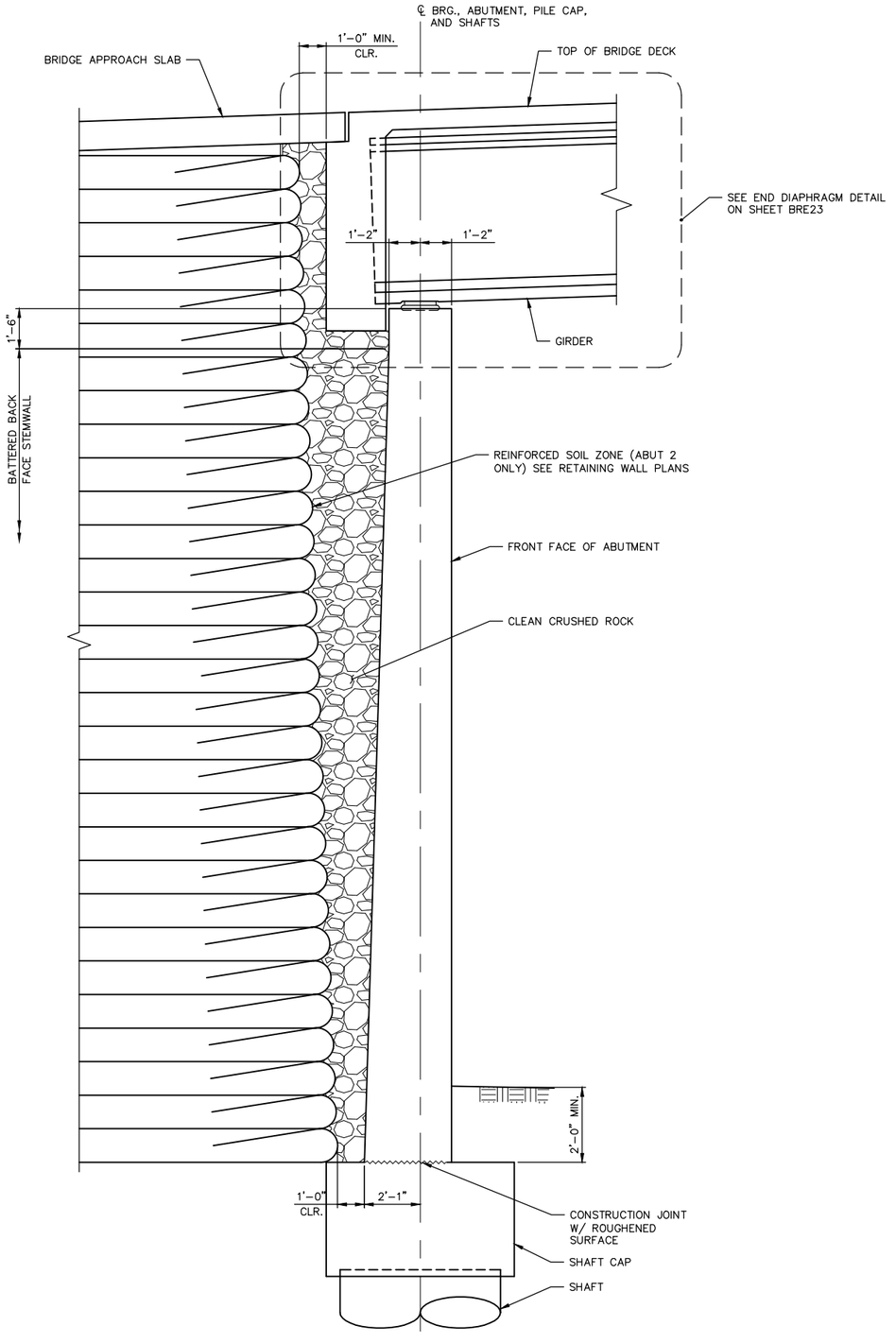

ABUTMENT WALL TYPICAL SECTION

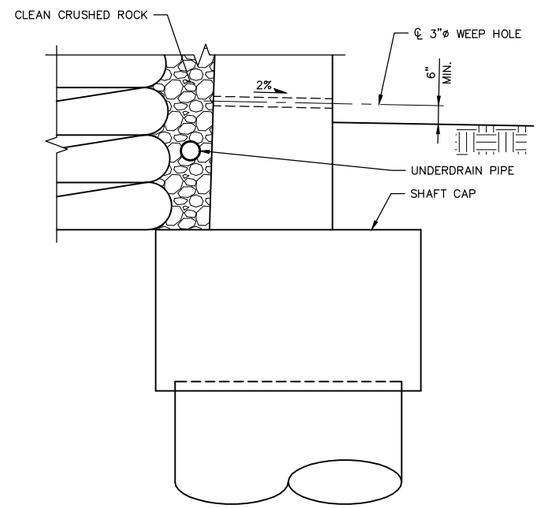

DRAINAGE DETAIL

SEE DR SHEETS FOR ADDITIONAL INFORMATION

ROBERT D. RICHARDSON STATE OF WASHINGTON 33999 REGISTERED PROFESSIONAL ENGINEER

NO.	DATE	BY	APPR.	REVISIONS

Approved By

TRANSPORTATION DESIGN MANAGER — DATE
S. COSTA
PROJECT MANAGER — DATE

E. CLARK — DESIGNED BY — DATE
H. GONSIOR — DRAWN BY — DATE
R. RICHARDSON — CHECKED BY — DATE

City of Bellevue
TRANSPORTATION DEPARTMENT

HDR

NE SPRING BLVD - ZONE 1B
90% DESIGN

EAST BRIDGE
ABUTMENT DETAILS 2 OF 3

SHEET NAME BRE9

SHT 152 OF 185

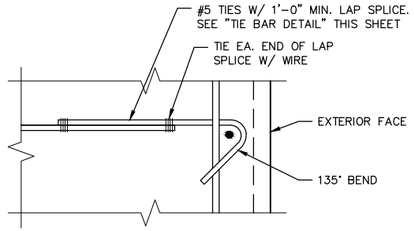

ALTERNATE
TIE BAR DETAIL
NTS
CONSTANT OR VARIABLE WIDTH SECTION.
SEE "TIE BAR DETAIL" THIS SHEET FOR
ADDITIONAL INFORMATION.

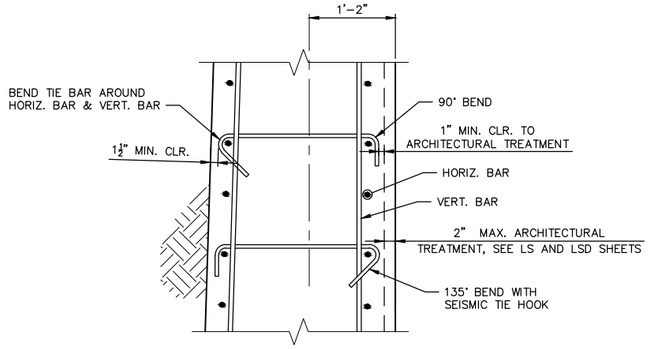

TIE BAR DETAIL
NTS
ALTERNATE 135° HOOK EVERY OTHER TIE BAR

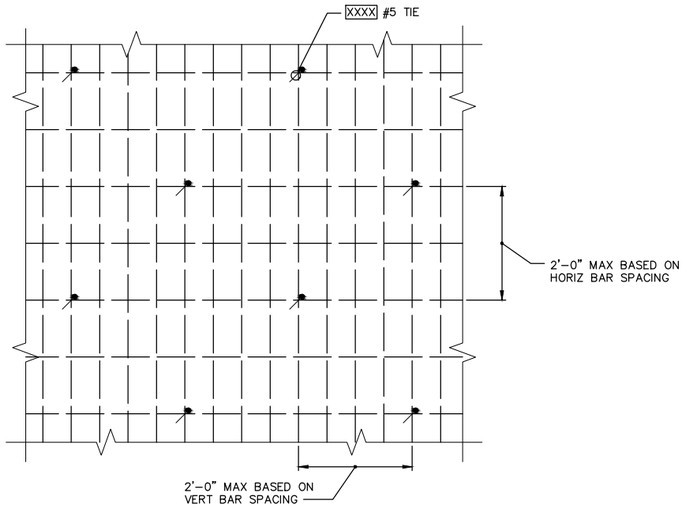

TIE BAR SPACING DETAIL
NTS

ROBERT D. RICHARDSON
STATE OF WASHINGTON
33999
REGISTERED
PROFESSIONAL ENGINEER

NO.	DATE	BY	APPR.	REVISIONS

Approved By

TRANSPORTATION DESIGN MANAGER DATE
S. COSTA
PROJECT MANAGER DATE

E. CLARK
DESIGNED BY DATE
H. GONSIOR
DRAWN BY DATE
R. RICHARDSON
CHECKED BY DATE

City of Bellevue
TRANSPORTATION DEPARTMENT

HDR

NE SPRING BLVD - ZONE 1B
90% DESIGN

EAST BRIDGE
ABUTMENT DETAILS 3 OF 3

SHEET NAME BRE10

SHT 153 OF 185

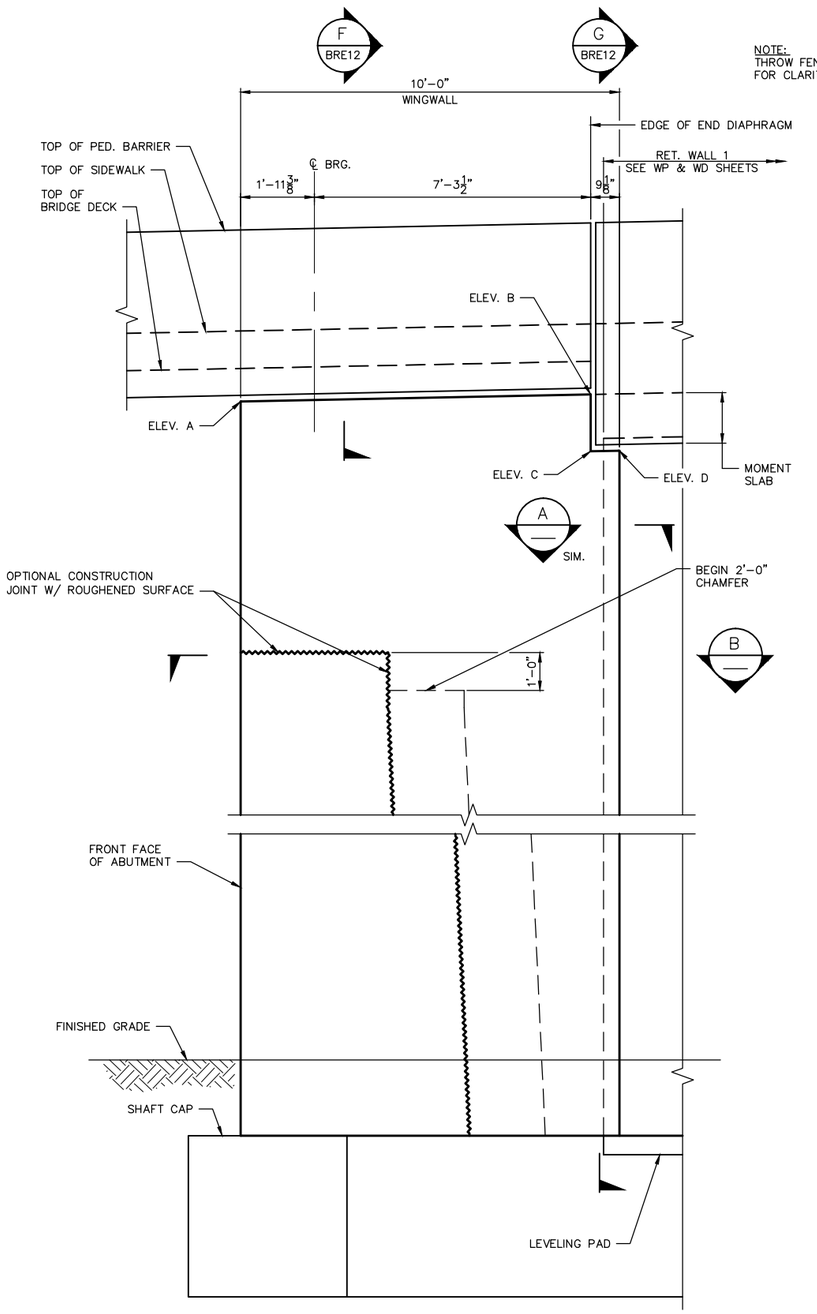

ELEVATION – ABUTMENT 1 NORTH WINGWALL

DIMENSIONS ALONG FACE OF WINGWALL UNLESS NOTED OTHERWISE
(THROW FENCE NOT SHOWN)

NOTE:
THROW FENCE NOT SHOWN FOR CLARITY.

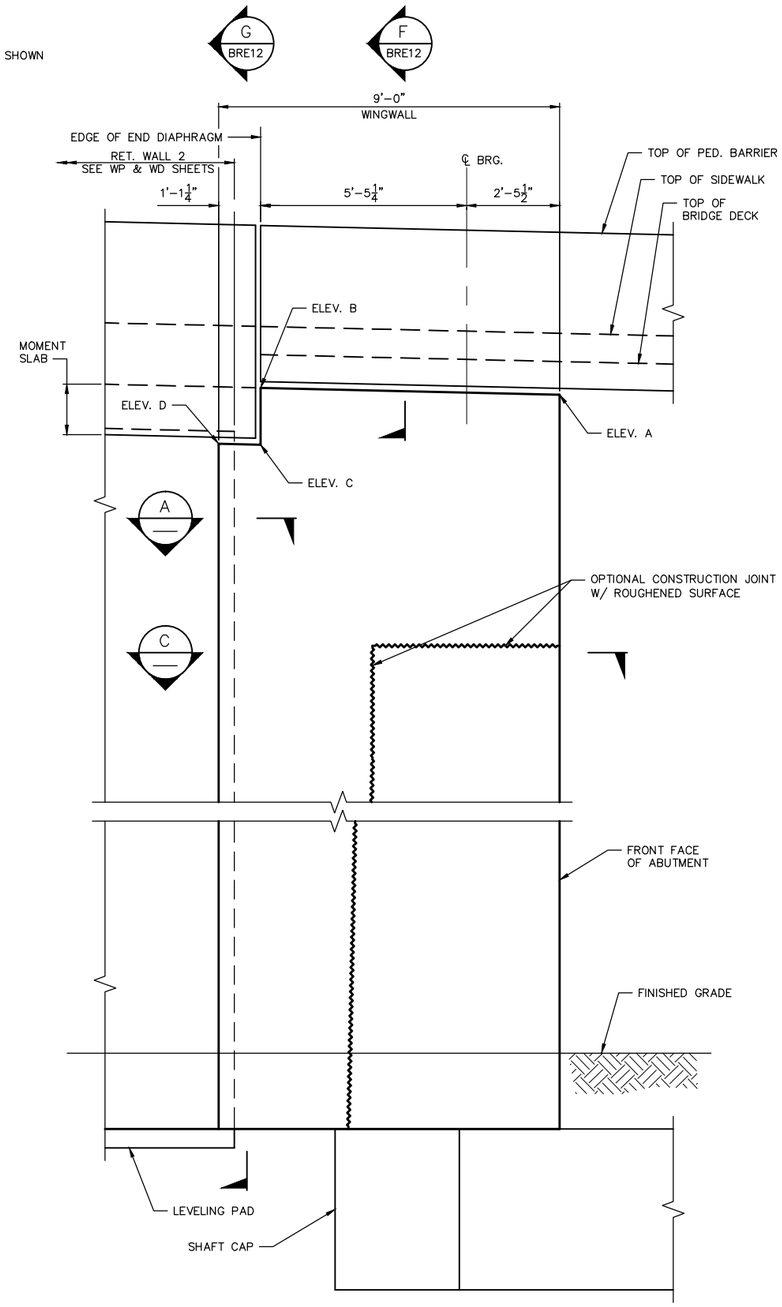

ELEVATION – ABUTMENT 1 SOUTH WINGWALL

DIMENSIONS ALONG FACE OF WINGWALL UNLESS NOTED OTHERWISE
(THROW FENCE NOT SHOWN)

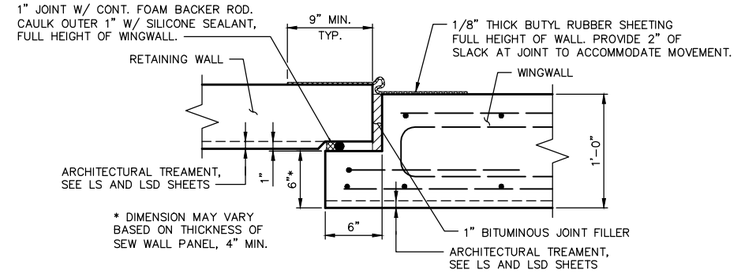

SECTION A
N.T.S.
BRE11 & BRE12

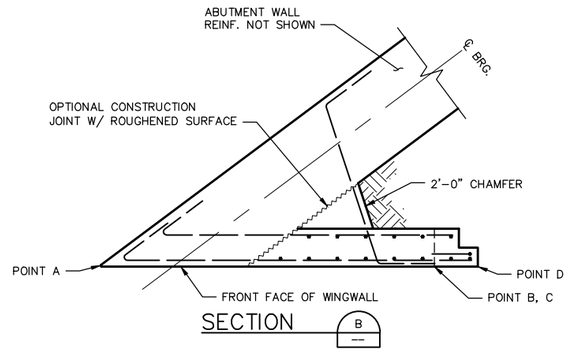

SECTION B

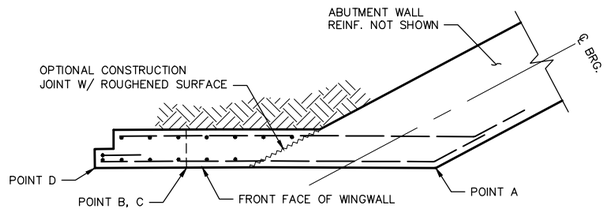

SECTION C

TOP OF WINGWALL ELEVATIONS				
LOCATION	ELEV. A	ELEV. B	ELEV. C	ELEV. D
NORTH WALL	181.83	181.42	180.83	180.84
SOUTH WALL	182.67	182.78	181.91	181.92

ROBERT D. RICHARDSON STATE OF WASHINGTON 13999 REGISTERED PROFESSIONAL ENGINEER

NO.	DATE	BY	APPR.	REVISIONS

Approved By

TRANSPORTATION DESIGN MANAGER DATE
S. COSTA
PROJECT MANAGER DATE

E. CLARK
DESIGNED BY DATE
H. GONSIOR
DRAWN BY DATE
R. RICHARDSON
CHECKED BY DATE

City of Bellevue
TRANSPORTATION DEPARTMENT

HDR

NE SPRING BLVD - ZONE 1B
90% DESIGN

EAST BRIDGE
ABUTMENT 1 WINGWALL DETAILS

SHEET NAME BRE11

SHT 154 OF 185

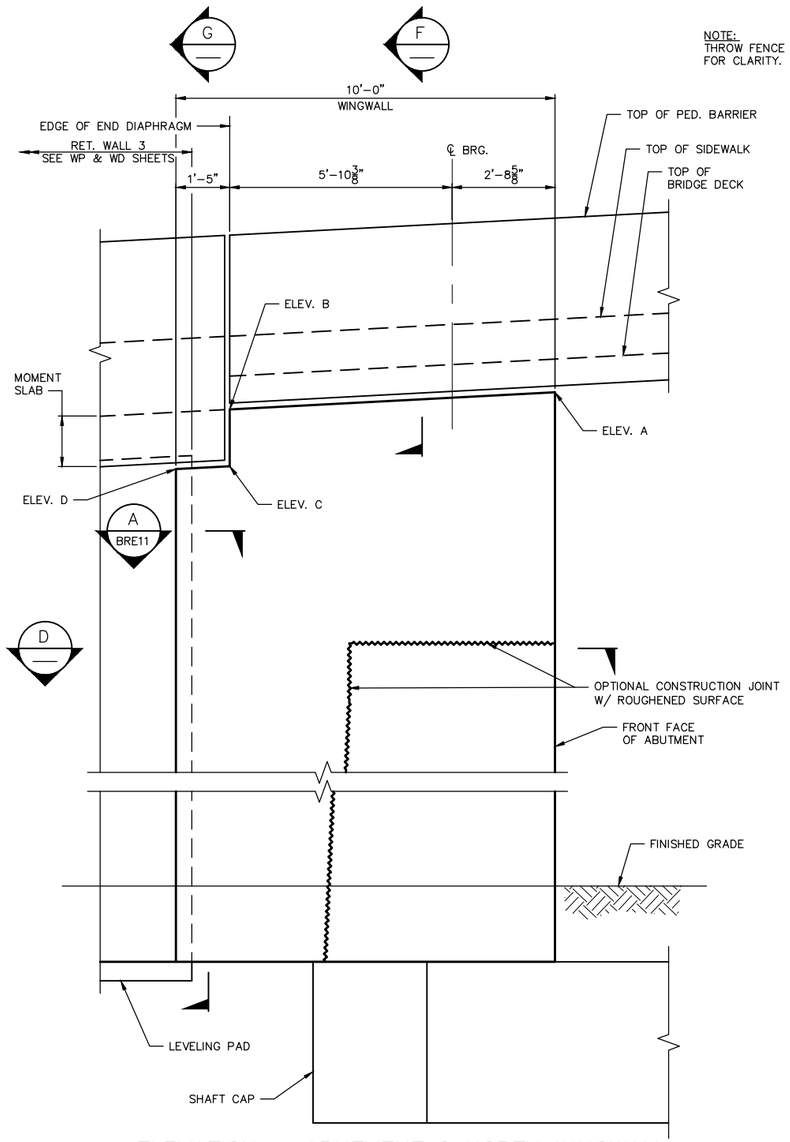

ELEVATION – ABUTMENT 2 NORTH WINGWALL

DIMENSIONS ALONG FACE OF WINGWAL UNLESS NOTED OTHERWISE
(THROW FENCE NOT SHOWN)

NOTE:
THROW FENCE NOT SHOWN
FOR CLARITY.

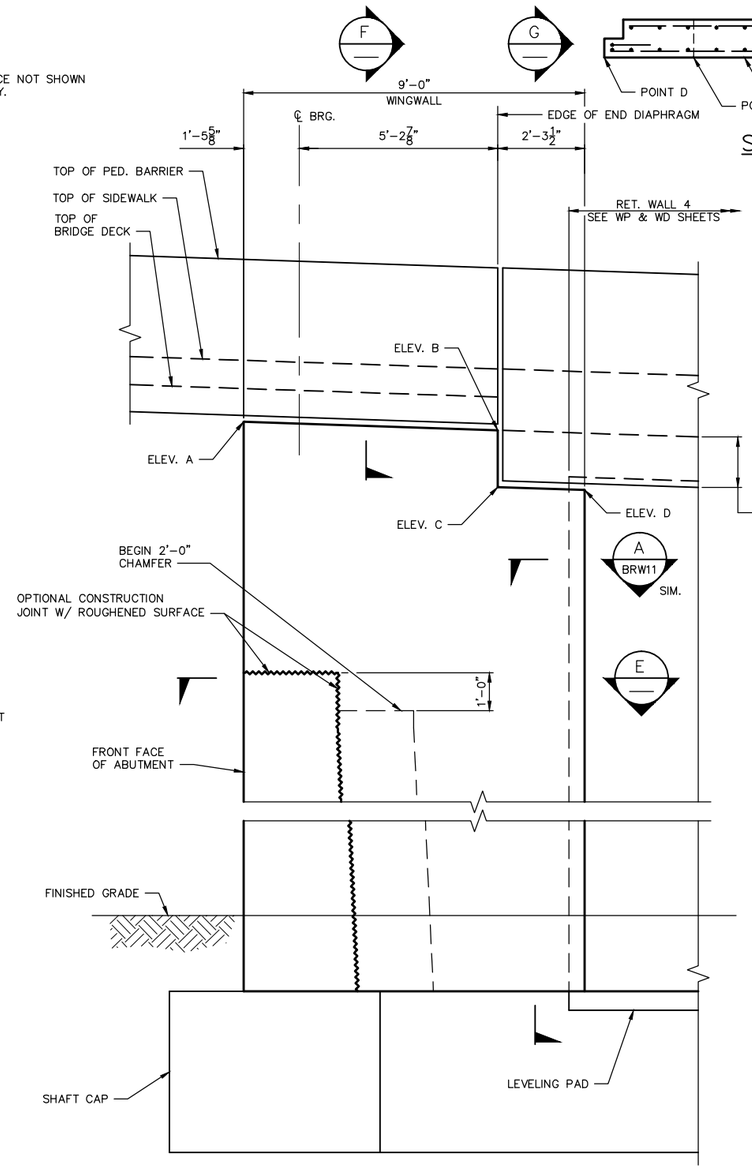

ELEVATION – ABUTMENT 2 SOUTH WINGWALL

DIMENSIONS ALONG FACE OF WINGWALL UNLESS NOTED OTHERWISE
(THROW FENCE NOT SHOWN)

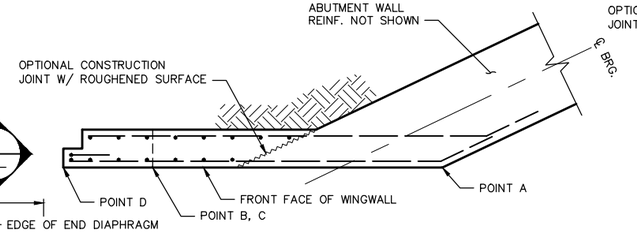

SECTION D

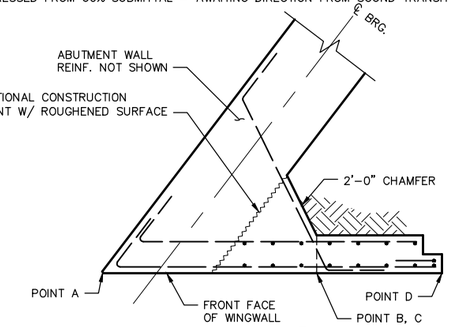

SECTION E

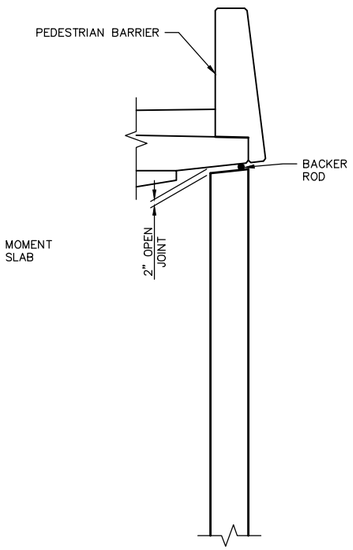

SECTION F

BRE11 & BRE12

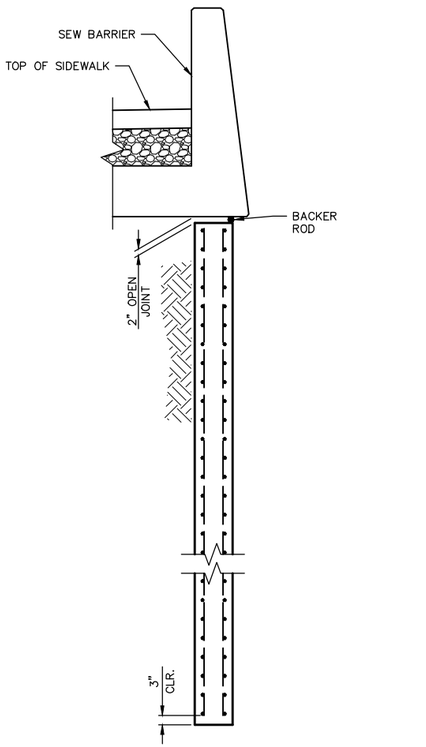

SECTION G

BRE11 & BRE12

NOTES:
1. THROW FENCE NOT SHOWN FOR CLARITY.

TOP OF WINGWALL ELEVATIONS				
LOCATION	ELEV. A	ELEV. B	ELEV. C	ELEV. D
NORTH WALL	176.94	176.51	175.92	175.86
SOUTH WALL	180.53	180.35	179.48	179.41

ROBERT D. RICHARDSON
STATE OF WASHINGTON
13909
REGISTERED
PROFESSIONAL ENGINEER

NO.	DATE	BY	APPR.	REVISIONS

Approved By

TRANSPORTATION DESIGN MANAGER DATE
S. COSTA
PROJECT MANAGER DATE

E. CLARK
DESIGNED BY DATE
H. GONSIOR
DRAWN BY DATE
R. RICHARDSON
CHECKED BY DATE

City of Bellevue
TRANSPORTATION DEPARTMENT

NE SPRING BLVD - ZONE 1B
90% DESIGN

EAST BRIDGE
ABUTMENT 2 WINGWALL DETAILS

SHEET NAME BRE12

SHT 155 OF 185

NO.	DATE	BY	APPR.	REVISIONS

Approved By

TRANSPORTATION DESIGN MANAGER DATE
S. COSTA
PROJECT MANAGER DATE

E. CLARK
DESIGNED BY DATE
H. GONSIOR
DRAWN BY DATE
R. RICHARDSON
CHECKED BY DATE

City of Bellevue
TRANSPORTATION DEPARTMENT

HDR

NE SPRING BLVD - ZONE 1B
90% DESIGN

EAST BRIDGE
WINGWALL CONNECTION DETAILS

SHEET NAME BRE13

SHT 156 OF 185

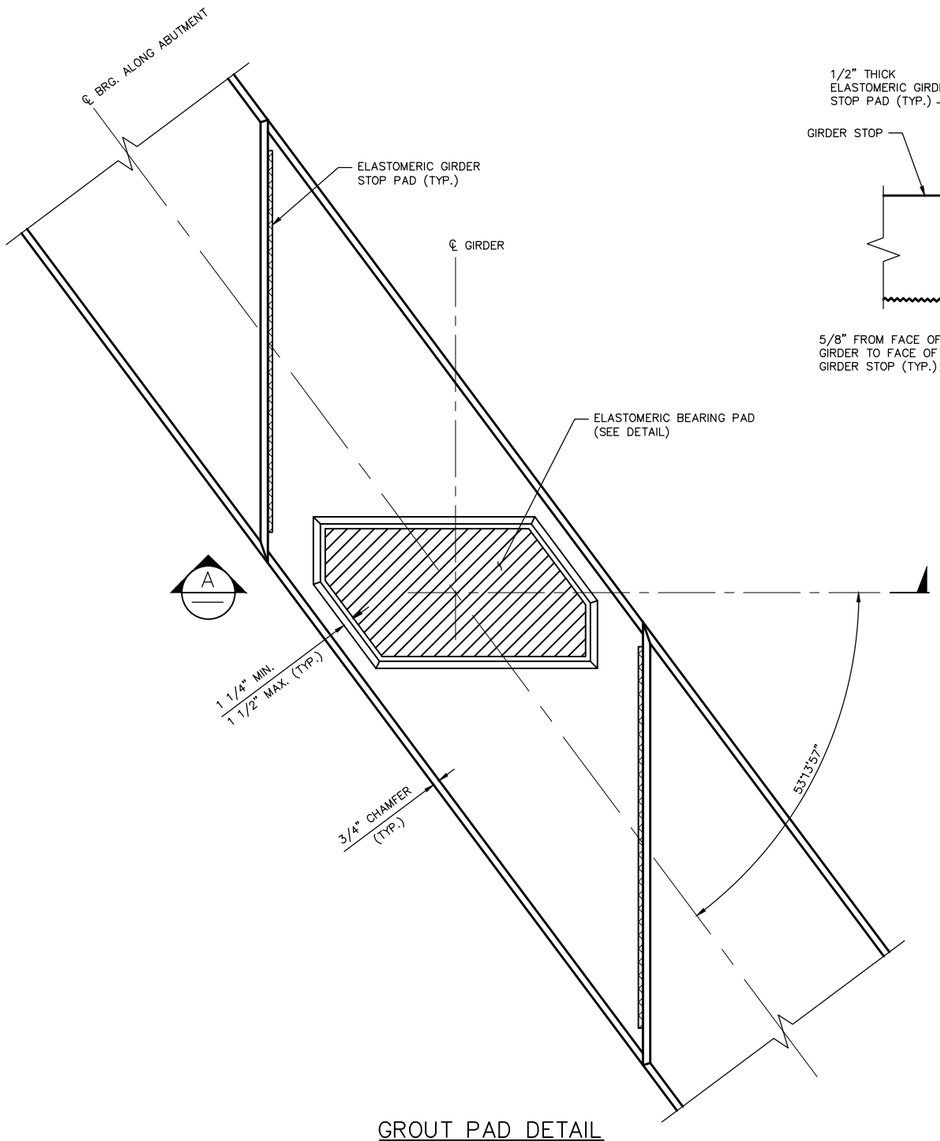

GROUT PAD DETAIL
GIRDER NOT SHOWN FOR CLARITY

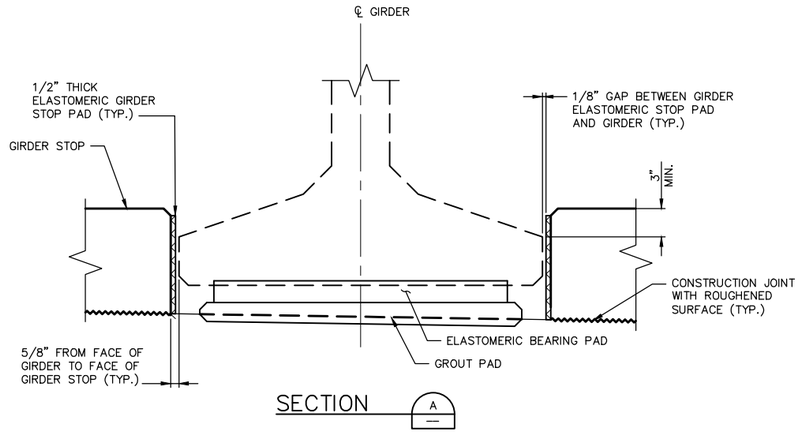

SECTION A

BEARING DESIGN TABLE AASHTO METHOD B DESIGN	
SERVICE – 1 LIMIT STATE	
DEAD LOAD (DL) REACTION	___ KIPS
LIVE LOAD REACTION (W/O IMPACT)	___ KIPS
UNLOADED HEIGHT	2.30 IN
LOADED HEIGHT (DL)	___ IN
SHEAR MODULUS	165 PSI

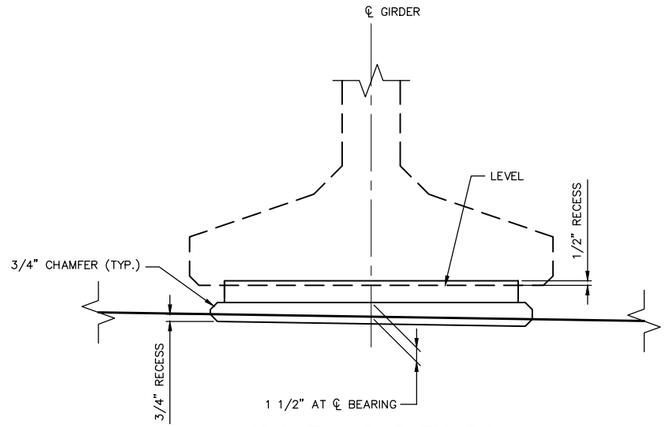

GROUT PAD ELEVATION

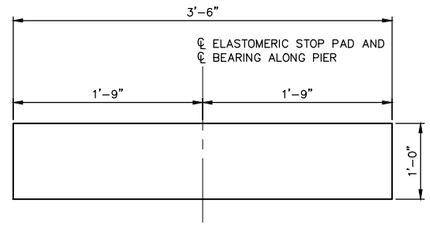

ELASTOMERIC GIRDER STOP PAD
SHEAR MODULUS = 165 PSI

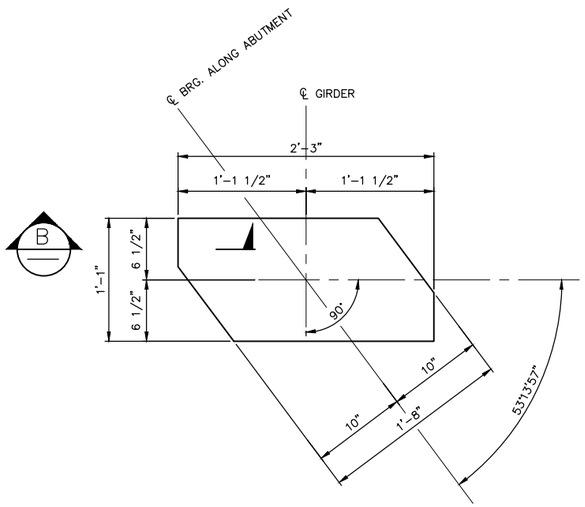

ELASTOMERIC BEARING PAD
LAMINATED ELASTOMERIC BEARING PAD (4 SHIMS)

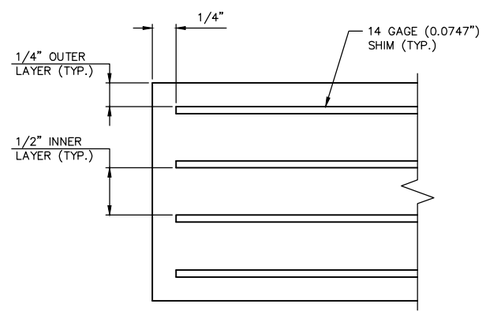

SECTION B

NOTES:

1. GIRDER STOPS SHALL BE CONSTRUCTED AFTER GIRDER PLACEMENT.
2. THE ELASTOMERIC GIRDER STOP PADS SHALL BE CEMENTED TO GIRDER STOPS WITH APPROVED ADHESIVE.

ROBERT D. RICHARDSON STATE OF WASHINGTON 33999 REGISTERED PROFESSIONAL ENGINEER

NO.	DATE	BY	APPR.	REVISIONS

Approved By

TRANSPORTATION DESIGN MANAGER DATE
S. COSTA
PROJECT MANAGER DATE

E. CLARK
DESIGNED BY DATE
H. GONSIOR
DRAWN BY DATE
R. RICHARDSON
CHECKED BY DATE

City of Bellevue
TRANSPORTATION DEPARTMENT

HDR

NE SPRING BLVD - ZONE 1B
90% DESIGN

EAST BRIDGE
BEARING PAD DETAILS

SHEET NAME BRE14

SHT 157 OF 185

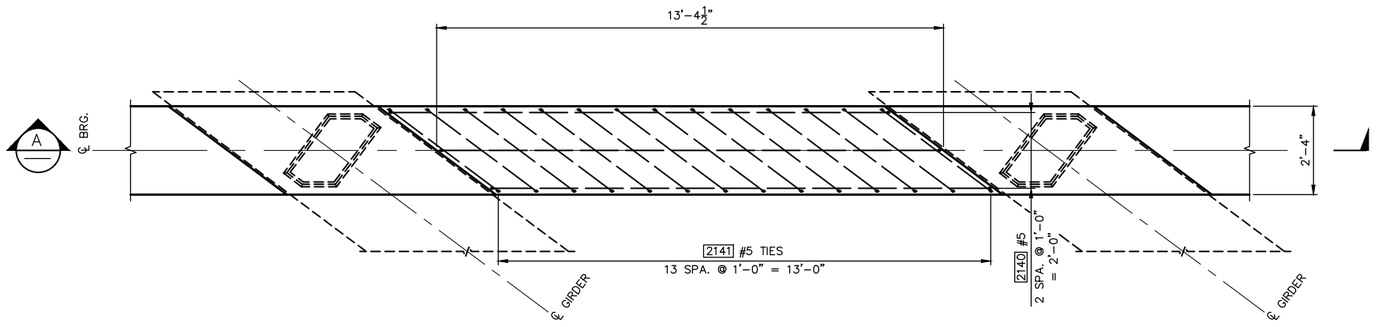

TYPICAL GIRDER STOP DETAIL

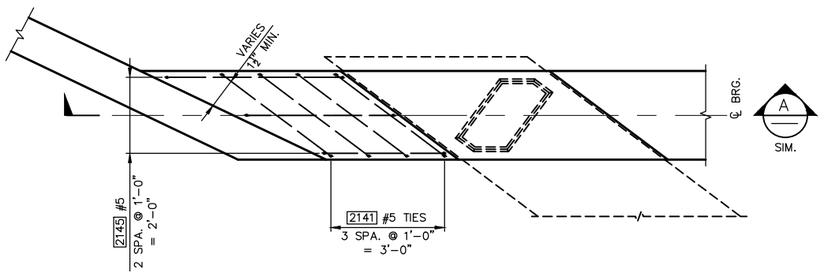

ABUTMENT 2 NORTH GIRDER STOP DETAIL

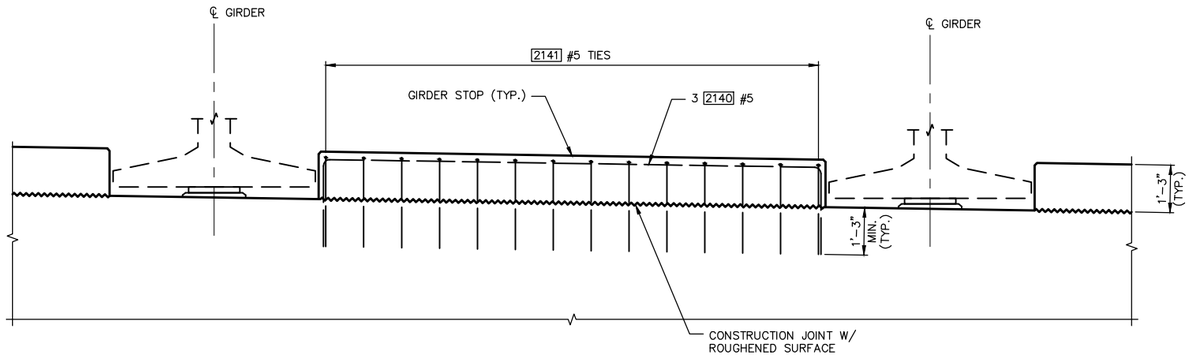

SECTION A

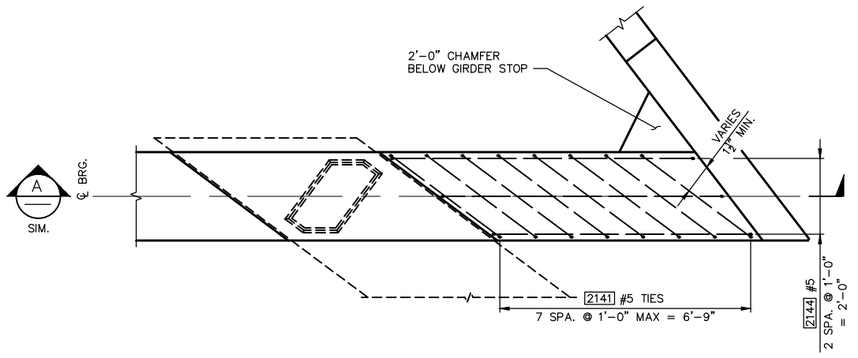

ABUTMENT 2 SOUTH GIRDER STOP DETAIL

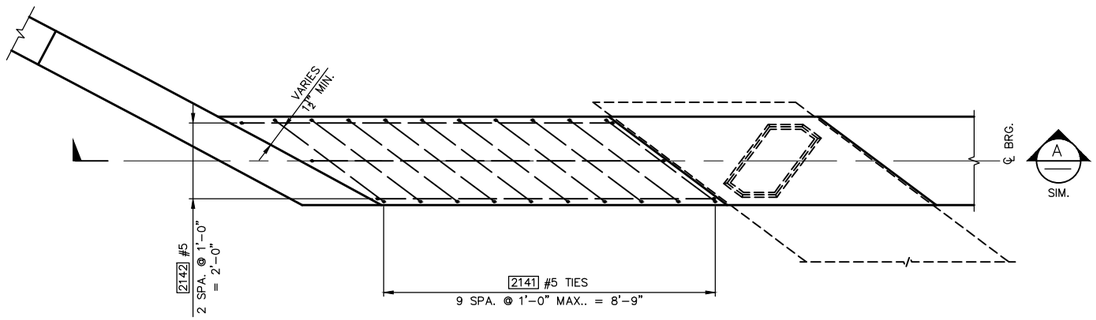

ABUTMENT 1 SOUTH GIRDER STOP DETAIL
(LOOKING BACK ON STATION)

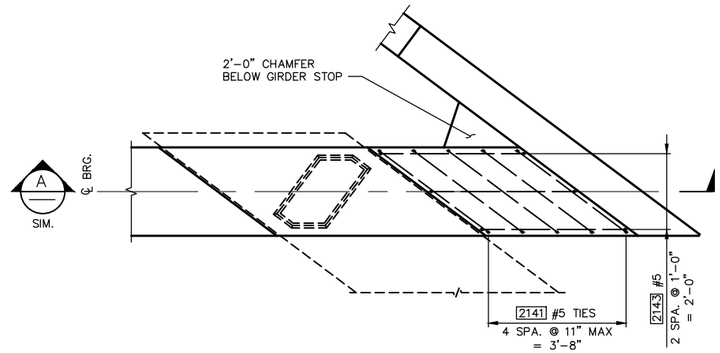

ABUTMENT 1 NORTH GIRDER STOP DETAIL
(LOOKING BACK ON STATION)

ROBERT D. RICHARDSON
STATE OF WASHINGTON
33999
REGISTERED
PROFESSIONAL ENGINEER

NO.	DATE	BY	APPR.	REVISIONS

Approved By

TRANSPORTATION DESIGN MANAGER — DATE
S. COSTA
PROJECT MANAGER — DATE

E. CLARK — DESIGNED BY — DATE
H. GONSIOR — DRAWN BY — DATE
R. RICHARDSON — CHECKED BY — DATE

City of Bellevue
TRANSPORTATION DEPARTMENT

HDR

NE SPRING BLVD - ZONE 1B
90% DESIGN

EAST BRIDGE
GIRDER STOP DETAILS

SHEET NAME **BRE15**

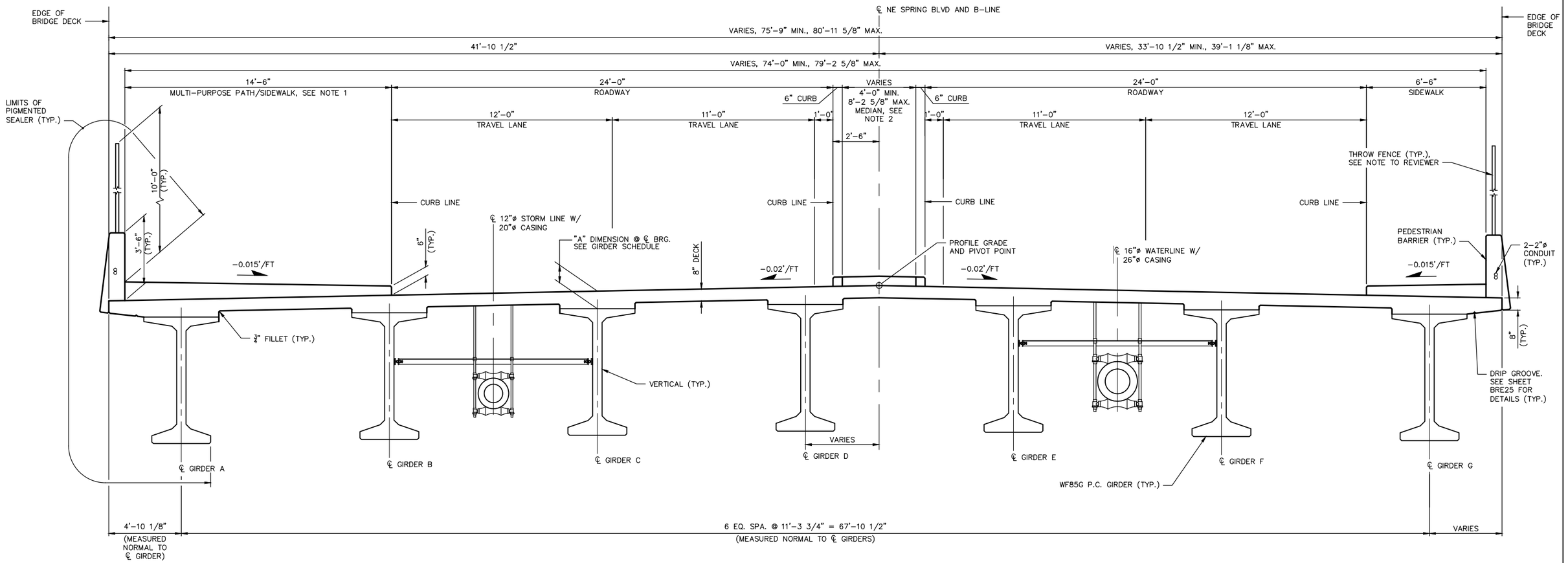

NE SPRING BLVD – EAST BRIDGE TYPICAL SECTION

HORIZONTAL DIMENSIONS ARE NORMAL TO NE SPRING BLVD ℄ UNLESS NOTED OTHERWISE.

NOTES:

1. SEE LS AND LSD SHEETS FOR SCORING AND COLORING DETAILS
2. PATTERNED CONCRETE MEDIAN. SEE LS AND LSD SHEETS.

NOTE TO REVIEWER:
THROW FENCE MATERIALS, DESIGN, AND CALCULATIONS TO BE DETERMINED PENDING OCTOBER 2015 COORDINATION WITH PLANNING AND TRANSPORTATION DEPARTMENTS.

ROBERT D. RICHARDSON — STATE OF WASHINGTON — 33999 — REGISTERED PROFESSIONAL ENGINEER

NO.	DATE	BY	APPR.	REVISIONS

Approved By

TRANSPORTATION DESIGN MANAGER — DATE
S. COSTA
PROJECT MANAGER — DATE

E. CLARK — DESIGNED BY — DATE
H. CONSIOR — DRAWN BY — DATE
R. RICHARDSON — CHECKED BY — DATE

City of Bellevue
TRANSPORTATION DEPARTMENT

HDR

NE SPRING BLVD - ZONE 1B
90% DESIGN

EAST BRIDGE TYPICAL SECTION

SHEET NAME **BRE16**

SHT 159 OF 185

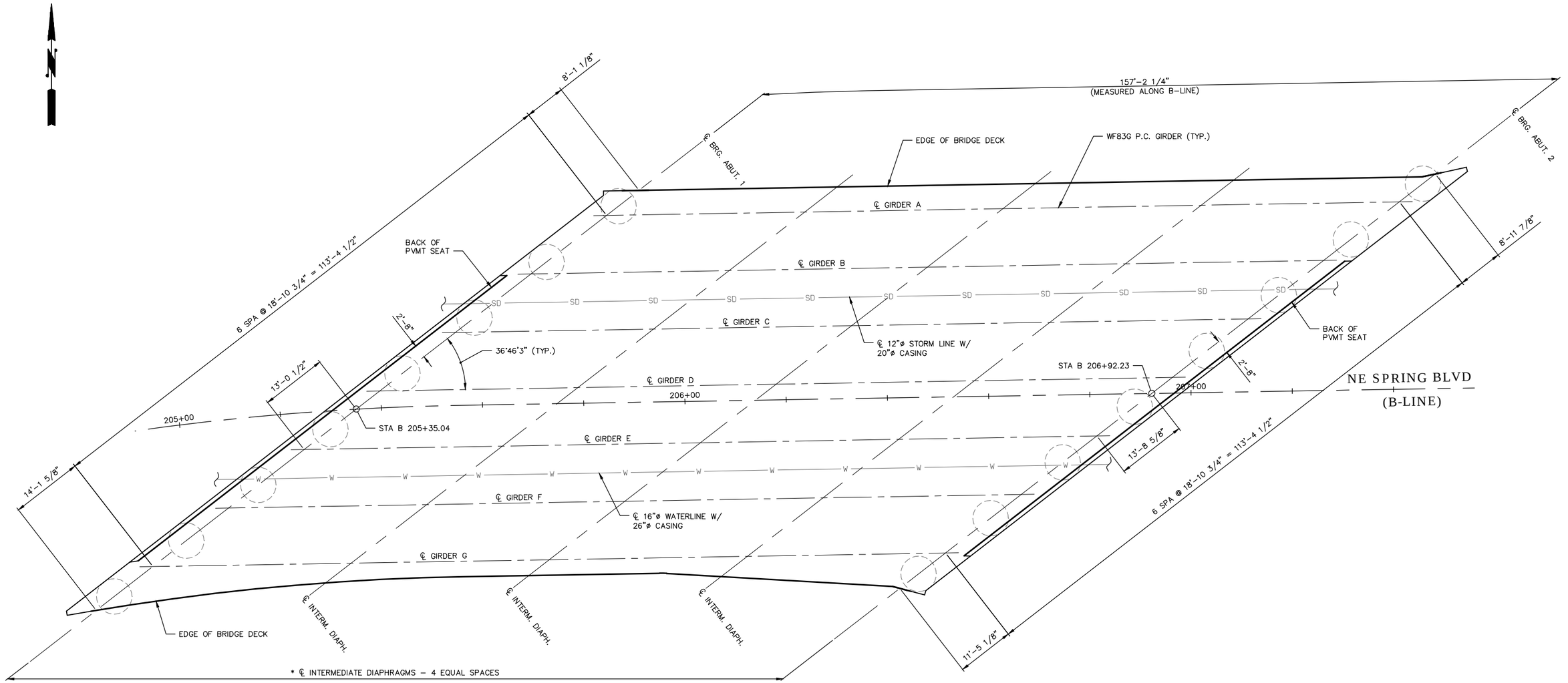

* INTERMEDIATE DIAPHRAGMS ARE PARALLEL TO ℄ ABUTMENTS

FRAMING PLAN

TRANSVERSE DIMENSIONS ARE MEASURED ALONG ℄ BEARING

10 5 0 10 20
SCALE

ROBERT D. RICHARDSON
STATE OF WASHINGTON
33999
REGISTERED
PROFESSIONAL ENGINEER

NO.	DATE	BY	APPR.	REVISIONS

Approved By

TRANSPORTATION DESIGN MANAGER DATE
S. COSTA
PROJECT MANAGER DATE

E. CLARK
DESIGNED BY DATE
H. GONSIOR
DRAWN BY DATE
R. RICHARDSON
CHECKED BY DATE

City of Bellevue
TRANSPORTATION DEPARTMENT

HDR

NE SPRING BLVD - ZONE 1B
90% DESIGN

EAST BRIDGE
FRAMING PLAN

SHEET NAME **BRE17**

SHT 160 OF 185

DIMENSION 'A' @ ℄ OF BEARING = 11 1/2"

EAST BRIDGE – GIRDER SCHEDULE

SPAN	GIRDER	GIRDER SERIES	END 1 TYPE	END 2 TYPE	INT. DIAPHRAGM TYPE	L (FT-IN)	LD (FT-IN)	LL (FT-IN)	LT (FT-IN)	Θ1 (DEG.)	Θ2 (DEG.)	P1 (FT-IN)	P2 (FT-IN)	PLAN LENGTH (ALONG GIRDER GRADE) (FT-IN)	MIN CONC. COMP. STRENGTH		NUMBER OF STRAIGHT STRANDS	NUMBER OF HARPED STRANDS	NUMBER OF TEMP. STRANDS	LOCATION OF C.G. STRANDS			STRAIGHT STRANDS TO EXTEND		DECK SCREED CAMBER C (IN)	D		REINFORCEMENT DETAILS						
															@ 28 DAYS F'C (KSI)	@ RELEASE F'CI (KSI)				E (IN)	F℄ (IN)	Fo (IN)	END 1	END 2		LOWER BOUND @ 40 DAYS (IN)	UPPER BOUND @ 120 DAYS (IN)	V1	V2 (IN)	V3	V4 (IN)	V5	V6 (IN)	H1 (FT-IN)
1	A	WF83G	A	A	PARTIAL	5'-3"	N/A	12'-4"	12'-4"	143.23	143.23	2'-6 7/8"	2'-6 7/8"	161'-9 1/2"	9.2	7.5	46	22	6	4 1/8	4 7/8	14	–	–	4 1/8	2 3/4	6 1/8	6	3 1/2	17	6	24	9	8'-1 1/8"
1	B	WF83G	A	A	PARTIAL	5'-3"	N/A	12'-4"	12'-4"	143.23	143.23	2'-6 7/8"	2'-6 7/8"	161'-9 1/2"	9.2	7.5	46	22	6	4 1/8	4 7/8	14	–	–	4 1/4	2 5/8	5 3/4	6	3 1/2	17	6	24	9	8'-1 1/8"
1	C	WF83G	A	A	PARTIAL	5'-3"	N/A	12'-4"	12'-4"	143.23	143.23	2'-6 7/8"	2'-6 7/8"	161'-9 1/2"	9.3	7.7	46	24	6	4 1/8	6	15	–	–	4 3/8	2 5/8	5 3/4	6	3 1/2	17	6	24	9	8'-1 1/8"
1	D	WF83G	A	A	PARTIAL	5'-3"	N/A	12'-4"	12'-4"	143.23	143.23	2'-6 7/8"	2'-6 7/8"	161'-9 1/2"	8.8	7.1	40	19	4	3 5/8	4 3/4	12 1/2	–	–	3 3/8	2 1/8	4 7/8	6	3 1/2	17	6	24	9	8'-1 1/8"
1	E	WF83G	A	A	PARTIAL	5'-3"	N/A	12'-4"	12'-4"	143.23	143.23	2'-6 7/8"	2'-6 7/8"	161'-9 1/2"	9.2	7.5	46	22	6	4 1/8	4 7/8	14	–	–	4 1/8	2 5/8	5 3/4	6	3 1/2	17	6	24	9	8'-1 1/8"
1	F	WF83G	A	A	PARTIAL	5'-3"	N/A	12'-4"	12'-4"	143.23	143.23	2'-6 7/8"	2'-6 7/8"	161'-9 1/2"	9.2	7.5	46	22	6	4 1/8	4 7/8	14	–	–	3 7/8	2 5/8	5 3/4	6	3 1/2	17	6	24	9	8'-1 1/8"
1	G	WF83G	A	A	PARTIAL	5'-3"	N/A	12'-4"	12'-4"	143.23	143.23	2'-6 7/8"	2'-6 7/8"	161'-9 1/2"	8.8	7.1	40	19	4	3 5/8	4 3/4	12 1/2	–	–	3 3/8	2 3/8	5 1/4	6	3 1/2	17	6	24	9	8'-1 1/8"

DIMENSIONS SHOWN ARE TO THE NEAREST 1/8TH INCH.

GIRDER NOTES

1. PLAN LENGTH SHALL BE INCREASED AS NECESSARY TO COMPENSATE FOR SHORTENING DUE TO PRESTRESS AND SHRINKAGE.
2. ALL PRETENSIONED AND TEMPORARY STRANDS SHALL BE 0.6"ø AASHTO M203 GRADE 270 LOW RELAXATION STRANDS, JACKED TO 202.5 KSI.
3. FOR END TYPE A, CUT ALL STRANDS FLUSH WITH THE GIRDER ENDS AND PAINT WITH AN APPROVED EPOXY RESIN, EXCEPT FOR EXTENDED STRANDS AS SHOWN.
4. THE TOP SURFACE OF THE GIRDER FLANGE SHALL BE ROUGHENED IN ACCORDANCE WITH SECTION 6-02.3(25)H OF THE STANDARD SPECIFICATIONS.
5. LIFTING EMBEDMENTS SHALL BE INSTALLED IN ACCORDANCE WITH SECTION 6-02.3(25)L OF THE STANDARD SPECIFICATIONS.
6. CAUTION SHALL BE EXERCISED IN HANDLING AND PLACING GIRDERS. ALL GIRDERS SHALL BE CHECKED BY THE CONTRACTOR TO ENSURE THAT THEY ARE BRACED ADEQUATELY TO PREVENT TIPPING AND TO CONTROL LATERAL BENDING DURING SHIPPING. ONCE ERECTED, ALL GIRDERS SHALL BE BRACED LATERALLY TO PREVENT TIPPING UNTIL THE DIAPHRAGMS ARE CAST AND CURED.
7. FORMS FOR BEARING PAD RECESSES SHALL BE CONSTRUCTED AND FASTENED IN SUCH A MANNER AS TO NOT CAUSE DAMAGE TO THE GIRDER DURING THE STRAND RELEASE OPERATION.
8. TEMPORARY TOP STRANDS SHALL BE EITHER PRETENSIONED OR POST-TENSIONED IN ACCORDANCE WITH SECTION 6-02.3(25)L OF THE STANDARD SPECIFICATIONS AND THE GIRDER DETAILS SHEETS. THE LIFTING LOCATION "L" AND CONCRETE RELEASE STRENGTH "F'CI" SHOWN IN THE GIRDER SCHEDULE ASSUME THAT THE TEMPORARY TOP STRANDS ARE PRETENSIONED. ALTERNATIVELY, POST-TENSIONED TEMPORARY TOP STRANDS MAY BE USED IF THE LIFTING POINTS IN THE GIRDER SCHEDULE ARE MAINTAINED AND THE STRANDS ARE STRESSED PRIOR TO LIFTING THE GIRDER FROM THE FORM.
9. FOR DIAPHRAGMS, OMIT HOLES AND PLACE INSERTS ON THE INTERIOR FACE OF EXTERIOR GIRDERS. PLACE HOLES AND INSERTS PARALLEL TO SKEW. INSERTS SHALL BE 1"ø MEADOWBURKE MX-3 HI-TENSILE, 1"ø x 5 1/2" WILLIAMS F22 OPEN FERRULE INSERT, 1"ø x 4 5/8" DAYTON-SUPERIOR F-62 FLARED THIN SLAB FERRULE INSERT.
10. DEFORMED WELDED WIRE REINFORCEMENT CONFORMING TO SECTION 9-07.7 WITH DEFORMED WIRE CONFORMING TO SECTION 9-07.8 MAY BE SUBSTITUTED FOR MILD STEEL REINFORCEMENT IF AASHTO LRFD BRIDGE DESIGN SPECIFICATION REQUIREMENTS (INCLUDING DEVELOPMENT AND ANCHORAGE) ARE MET. WELDED WIRE REINFORCEMENT SHALL HAVE THE SAME AREA AND SPACING AS THE MILD STEEL REINFORCEMENT THAT IT REPLACES AND THE YIELD STRENGTH SHALL BE GREATER THAN OR EQUAL TO 60 KSI. SHEAR STIRRUP LONGITUDINAL WIRES AND TACK WELDS SHALL BE EXCLUDED FROM GIRDER WEBS. LONGITUDINAL WIRES FOR ANCHORAGE OF WELDED WIRE REINFORCEMENT SHALL HAVE AN AREA OF 40% OR MORE OF THE AREA OF THE WIRE BEING ANCHORED BUT SHALL NOT BE LESS THAN D4.

ROBERT D. RICHARDSON — STATE OF WASHINGTON — 33999 — REGISTERED PROFESSIONAL ENGINEER

NO.	DATE	BY	APPR.	REVISIONS

Approved By

TRANSPORTATION DESIGN MANAGER S. COSTA DATE

PROJECT MANAGER DATE

E. CLARK — DESIGNED BY DATE
H. GONSIOR — DRAWN BY DATE
R. RICHARDSON — CHECKED BY DATE

City of Bellevue
TRANSPORTATION DEPARTMENT

HDR

NE SPRING BLVD - ZONE 1B
90% DESIGN

EAST BRIDGE
WF83G GIRDER SCHEDULE AND NOTES

SHEET NAME BRE18

SHT 161 OF 185

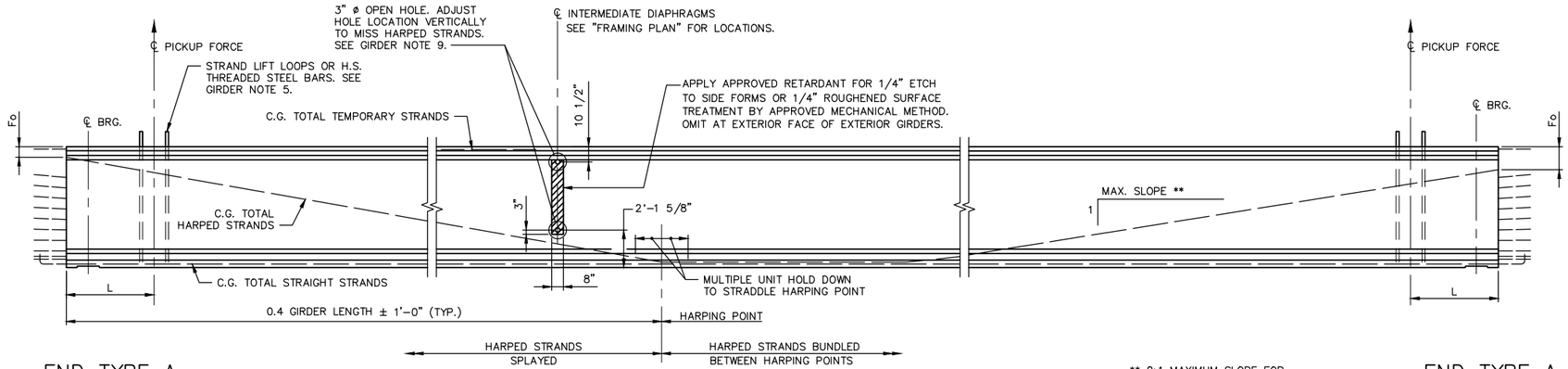

GIRDER ELEVATION
N.T.S.

** 8:1 MAXIMUM SLOPE FOR EACH HARPED STRAND

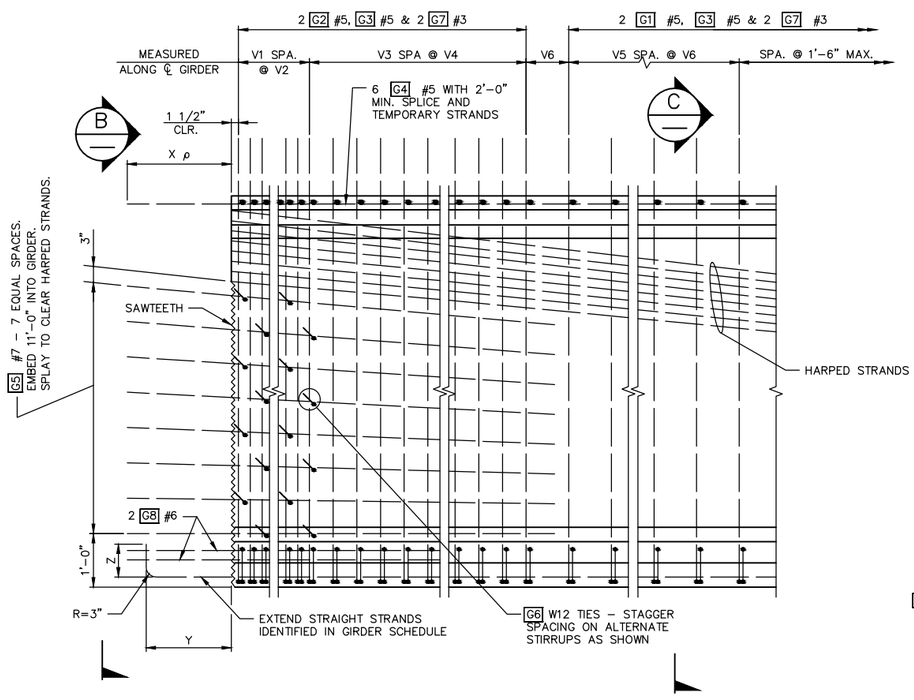

TYPICAL END ELEVATION

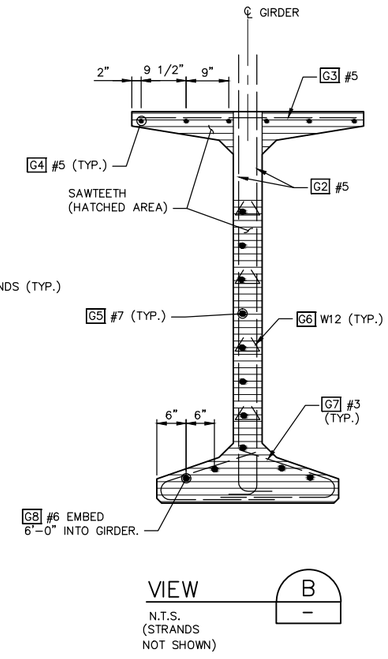

VIEW B
N.T.S.
(STRANDS NOT SHOWN)

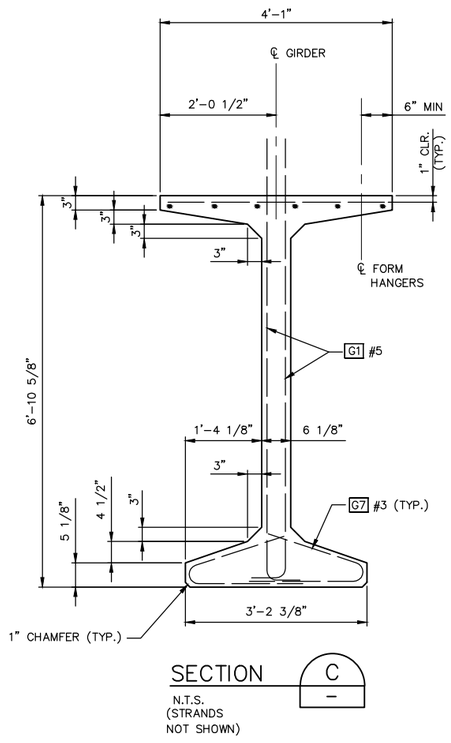

SECTION C
N.T.S.
(STRANDS NOT SHOWN)

BENDING DIAGRAM (ALL DIMENSIONS ARE OUT TO OUT)

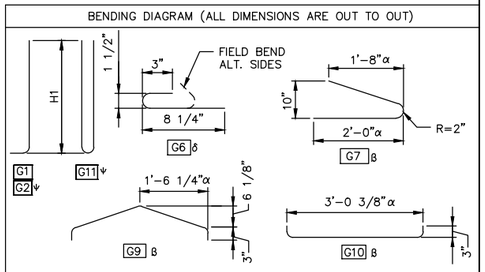

α – VARIES FOR SKEWED ENDS.
δ – #3 OR #4 MAY BE SUBSTITUTED. FIELD BENDING IS OPTIONAL.
β – PAIRS OF G7 BARS, OR G9 AND G10 BARS, MAY BE USED INTERCHANGEABLY AS BOTTOM FLANGE TIES.

ψ – 1 G11 MAY BE SUBSTITUTED FOR 2 G2 WITHIN THE V1 SPA. @ V2.

NOTE: FOR DIMENSION "A", SEE "GIRDER SCHEDULE"

ROBERT D. RICHARDSON STATE OF WASHINGTON 33999 REGISTERED PROFESSIONAL ENGINEER

NO.	DATE	BY	APPR.	REVISIONS

Approved By

TRANSPORTATION DESIGN MANAGER — DATE
S. COSTA
PROJECT MANAGER — DATE

E. CLARK — DESIGNED BY — DATE
H. GONSIOR — DRAWN BY — DATE
R. RICHARDSON — CHECKED BY — DATE

City of Bellevue
TRANSPORTATION DEPARTMENT

HDR

NE SPRING BLVD - ZONE 1B
90% DESIGN

EAST BRIDGE
WF83G GIRDER DETAILS 1 OF 3

SHEET NAME BRE19

SHT 162 OF 185

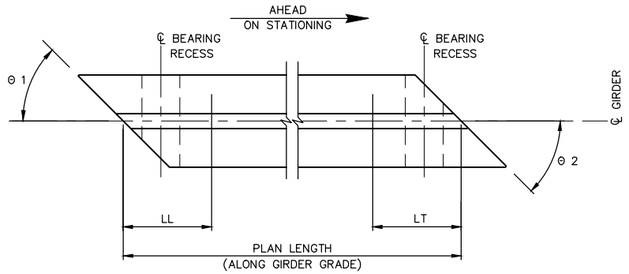

GIRDER SCHEDULE LEGEND

LL AND LT ARE SHIPPING SUPPORT LOCATIONS AT LEADING AND TRAILING ENDS, RESPECTIVELY.

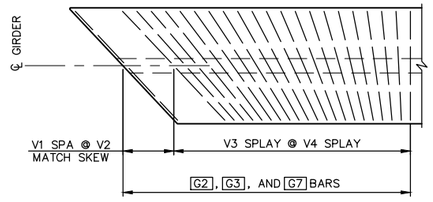

TRANSVERSE REINFORCING SKEWED ENDS

LENGTH OF G3 AND G7 VARY WITH SKEW. ONLY TRANSVERSE REINFORCEMENT SHOWN.

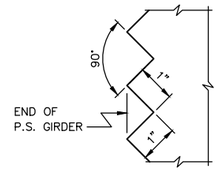

SAWTOOTH DETAILS

SAWTEETH ARE FULL WIDTH – USE SAWTOOTH KEYS FROM BOTTOM OF BOTTOM FLANGE TO BOTTOM OF LOWEST HARPED STRAND AS WELL AS TOP FLANGE ADJACENT TO HARPED STRANDS.

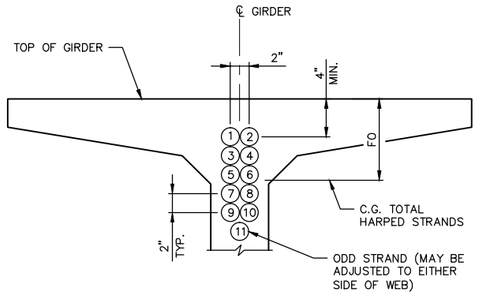

STRAND PATTERN AT GIRDER END

HARPED STRAND LOCATION SEQUENCE SHALL BE AS SHOWN (1), (2), ETC.

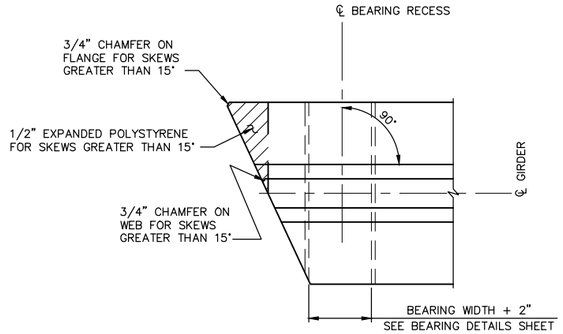

PLAN

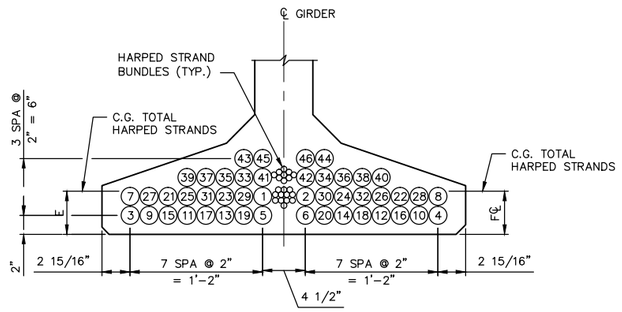

STRAND PATTERN AT ℄ SPAN

STRAIGHT STRAND LOCATION SEQUENCE SHALL BE AS SHOWN (1), (2), ETC.

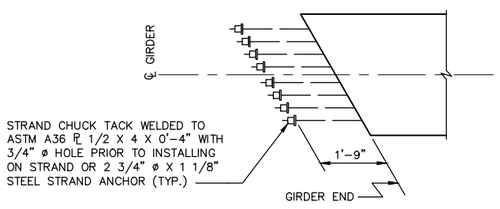

STRAND EXTENSION DETAIL

ANCHOR STRAND WITH TWO PIECE WEDGES BEFORE GIRDER ERECTION. VERIFY WEDGES ARE SEATED TIGHTLY IMMEDIATELY BEFORE PLACING DIAPHRAGM CONCRETE.

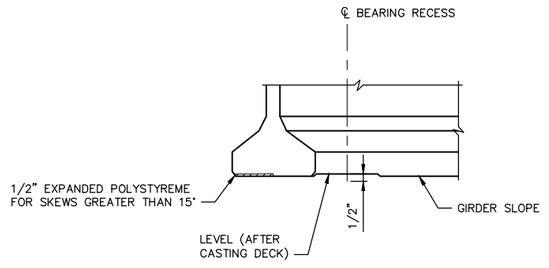

ELEVATION

BEARING RECESS AND BOTTOM FLANGE SPALL PROTECTION DETAIL

ROBERT D. RICHARDSON
STATE OF WASHINGTON
33999
REGISTERED
PROFESSIONAL ENGINEER

NO.	DATE	BY	APPR.	REVISIONS

Approved By

TRANSPORTATION DESIGN MANAGER — DATE

S. COSTA
PROJECT MANAGER — DATE

E. CLARK
DESIGNED BY — DATE

H. GONSIOR
DRAWN BY — DATE

R. RICHARDSON
CHECKED BY — DATE

City of Bellevue
TRANSPORTATION DEPARTMENT

HDR

NE SPRING BLVD - ZONE 1B
90% DESIGN

EAST BRIDGE
WF83G GIRDER DETAILS 2 OF 3

SHEET NAME **BRE20**

SHT 163 OF 185

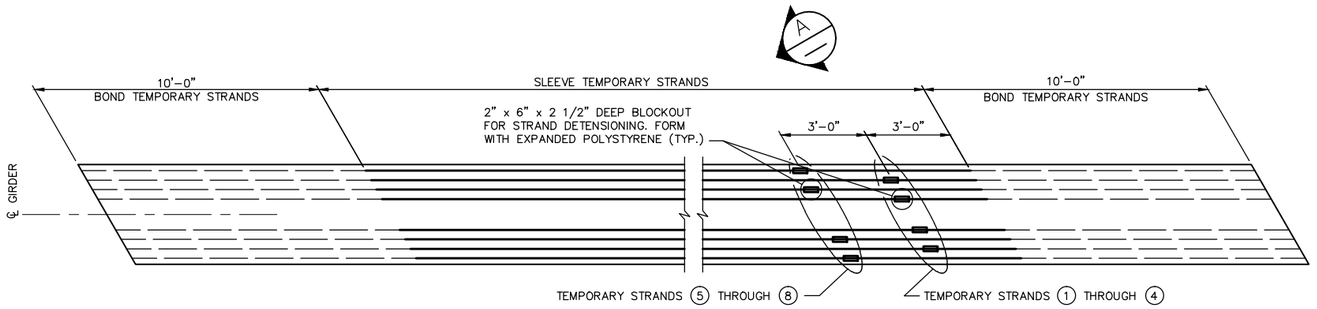

PLAN
PRE-TENSIONED TEMPORARY TOP STRANDS ALTERNATE

SEE "GIRDER SCHEDULE" FOR NUMBER OF TEMPORARY STRANDS REQUIRED.

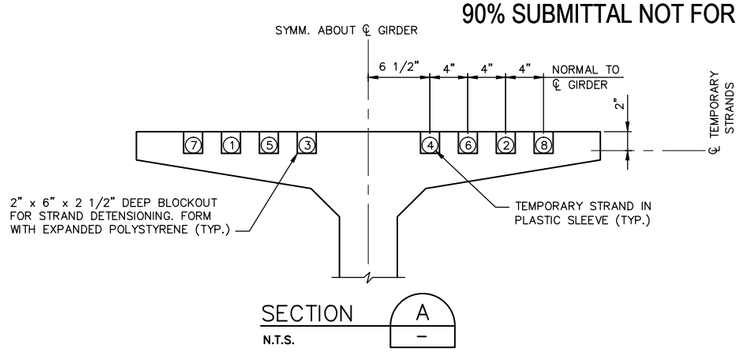

SECTION A
N.T.S.

NOTES:
1. TEMPORARY STRANDS LOCATION SEQUENCE SHALL BE AS SHOWN (1), (2), ETC.
2. STRANDS (7) AND (8) ARE NOT AVAILABLE FOR POST TENSIONED ALTERNATE.

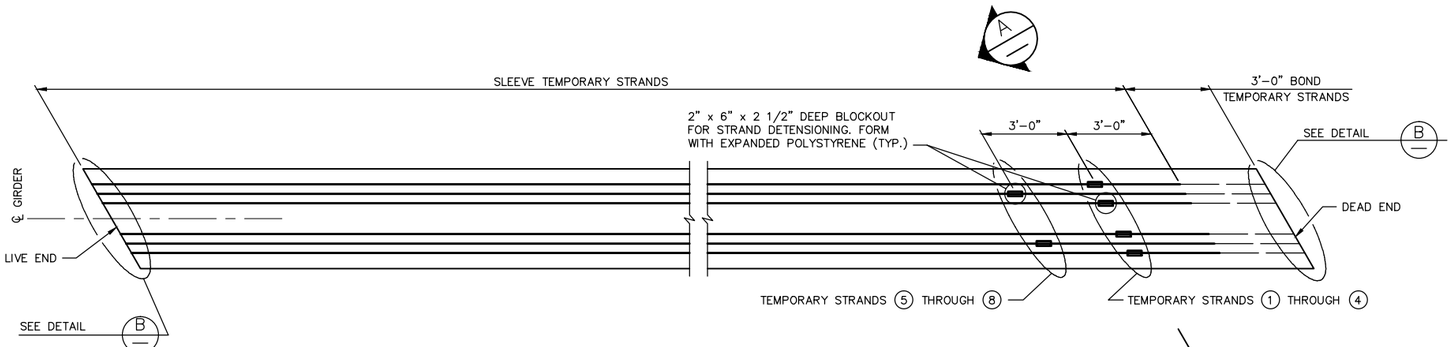

PLAN
POST-TENSIONED TEMPORARY TOP STRANDS ALTERNATE

SEE "GIRDER SCHEDULE" FOR NUMBER OF TEMPORARY STRANDS REQUIRED. POST-TEMSIONED ALTERNATE ONLY AVAILABLE FOR 6 OR FEWER TEMPORARY STRANDS.

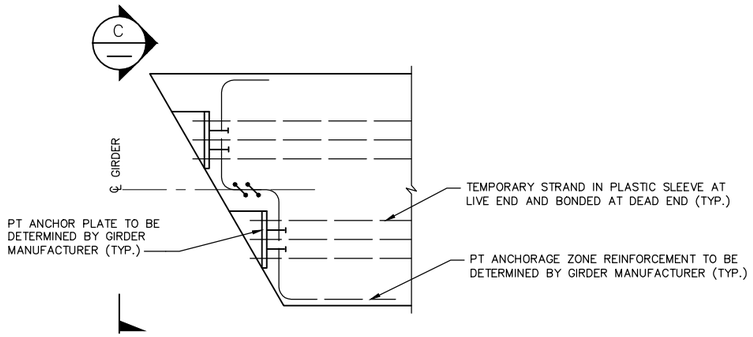

DETAIL B
N.T.S.
(LIVE END SHOWN.
DEAD END SIMILAR.)

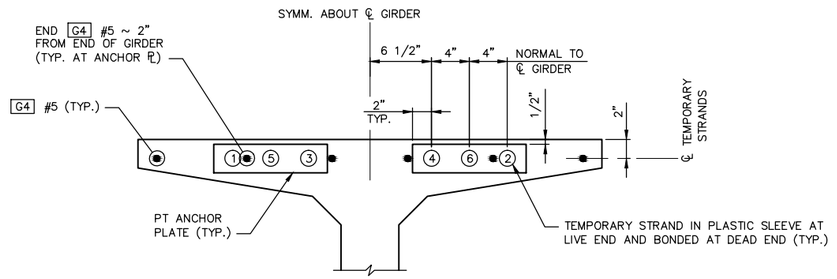

VIEW C
N.T.S.

TEMPORARY STRAND LOCATION SEQUENCE SHALL BE AS SHOWN (1), (2), ETC.

ROBERT D. RICHARDSON — STATE OF WASHINGTON — 33999 — REGISTERED PROFESSIONAL ENGINEER

NO.	DATE	BY	APPR.	REVISIONS

Approved By

TRANSPORTATION DESIGN MANAGER — DATE
S. COSTA
PROJECT MANAGER — DATE

E. CLARK
DESIGNED BY — DATE
H. GONSIOR
DRAWN BY — DATE
R. RICHARDSON
CHECKED BY — DATE

City of Bellevue
TRANSPORTATION DEPARTMENT

HDR

NE SPRING BLVD - ZONE 1B
90% DESIGN

EAST BRIDGE
WF83G GIRDER DETAILS 3 OF 3

SHEET NAME BRE21

SHT 164 OF 185

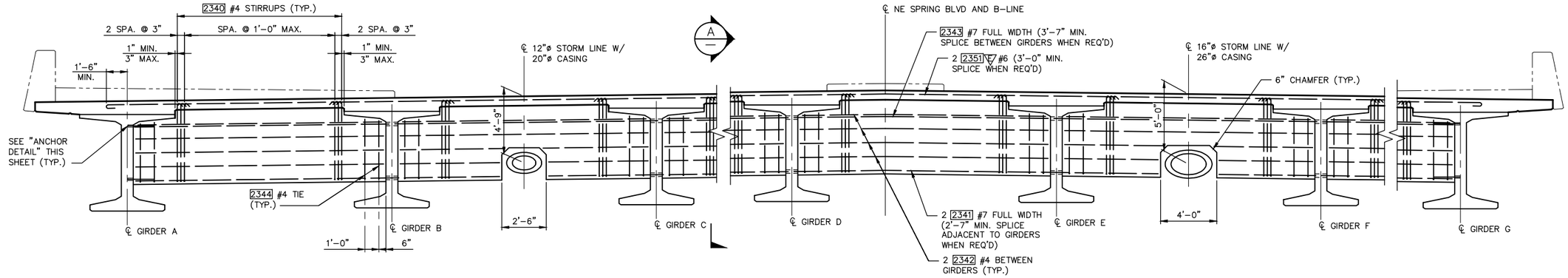

ELEVATION – INTERMEDIATE DIAPHRAGM

N.T.S.
(LOOKING AHEAD ON STATION. HORIZONTAL DIMENSIONS ARE ALONG DIAPHRAGM)

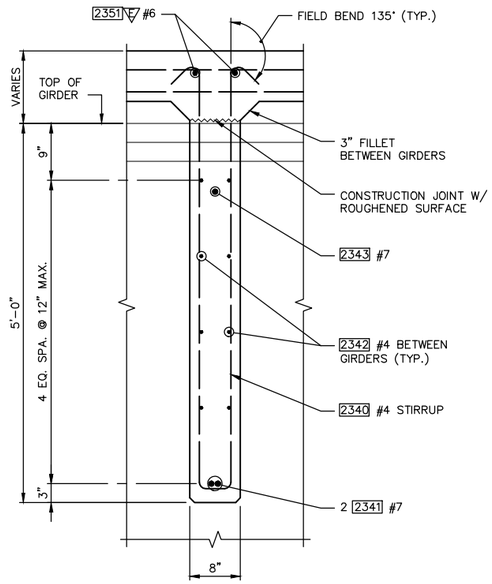

SECTION A—A

1"=1'-0"
(SEE GIRDER SCHEDULE FOR DIMENSION "A")

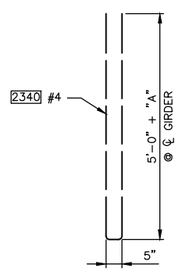

STIRRUP DETAIL

N.T.S.
(SEE GIRDER SCHEDULE FOR "A" DIMENSION)

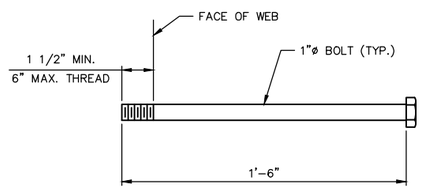

ANCHOR DETAIL

N.T.S.
ASTM A307

NOTES:

1. GIRDERS SHALL BE HELD RIGIDLY IN PLACE WHEN DIAPHRAGMS ARE PLACED.
2. IT MAY BE NECESSARY TO THREAD #7 REINFORCING BARS THROUGH HOLES IN GIRDERS PRIOR TO PLACING EXTERIOR GIRDERS.
3. CUT/RELEASE GIRDER TEMPORARY STRANDS BEFORE CASTING DIAPHRAGM. SEE TEMPORARY STRAND CUTTING SEQUENCE.
4. LONGITUDINAL DIMENSIONS ARE NORMAL TO SKEW.
5. FOR CONCRETE PLACEMENT PROCEDURE, SEE CONSTRUCTION SEQUENCE ON SHEET BRE3.

NO.	DATE	BY	APPR.	REVISIONS

Approved By

TRANSPORTATION DESIGN MANAGER — DATE
S. COSTA
PROJECT MANAGER — DATE

E. CLARK — DESIGNED BY — DATE
H. GONSIOR — DRAWN BY — DATE
R. RICHARDSON — CHECKED BY — DATE

City of Bellevue
TRANSPORTATION DEPARTMENT

HDR

NE SPRING BLVD - ZONE 1B
90% DESIGN

EAST BRIDGE
INTERMEDIATE DIAPHRAGM DETAILS

SHEET NAME BRE22

SHT 165 OF 185

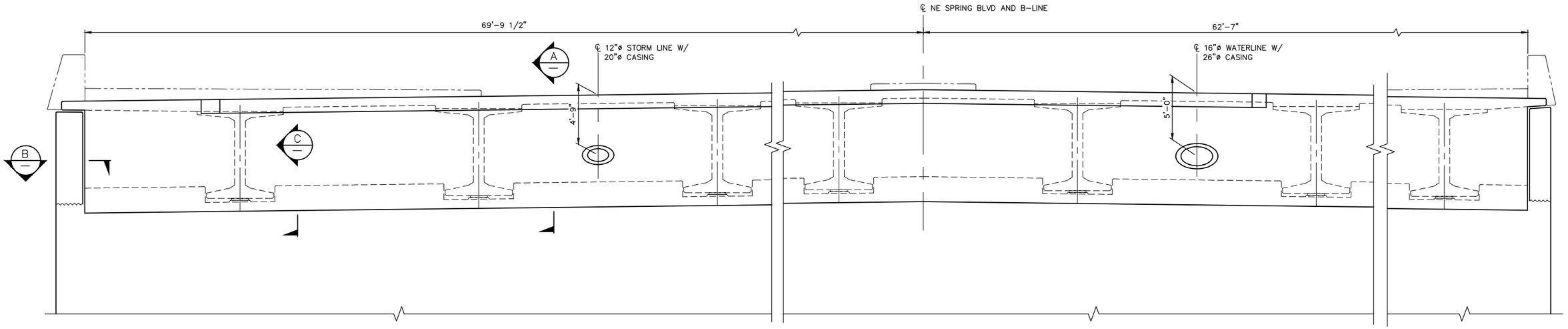

ELEVATION – END DIAPHRAGM

HORIZONTAL DIMENSIONS ARE ALONG ℄ DIAPHRAGM
ABUTMENT 1 SHOWN, ABUTMENT 2 SIMILAR

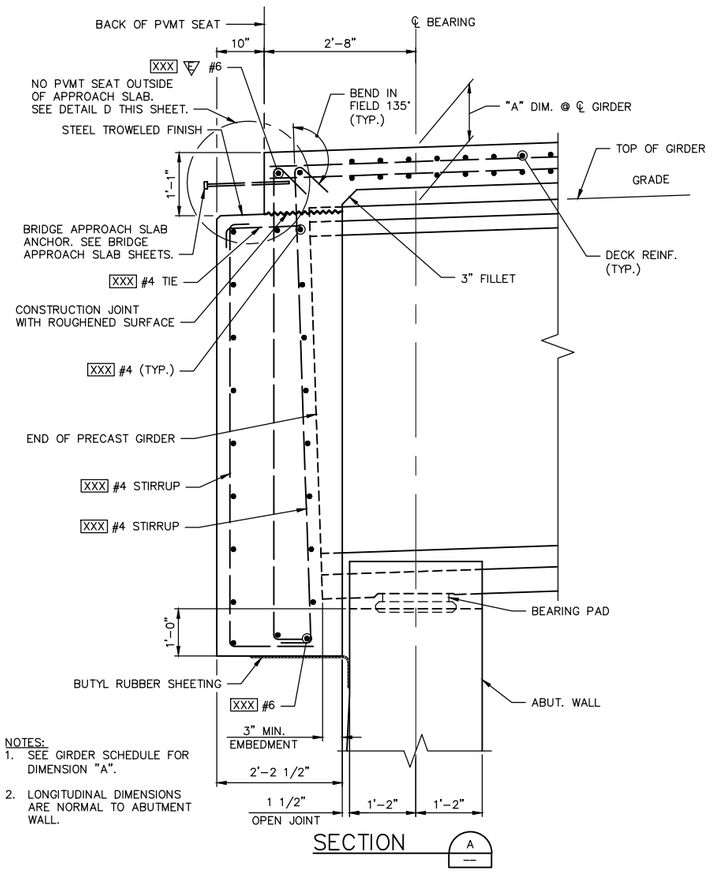

NOTES:
1. SEE GIRDER SCHEDULE FOR DIMENSION "A".
2. LONGITUDINAL DIMENSIONS ARE NORMAL TO ABUTMENT WALL.

SECTION A

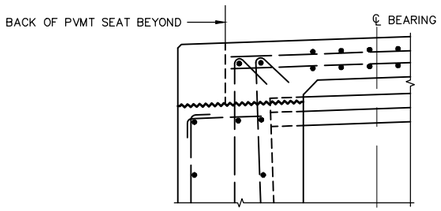

DETAIL D

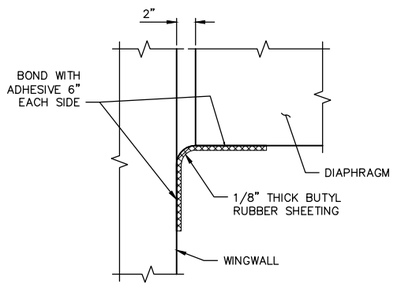

SECTION B

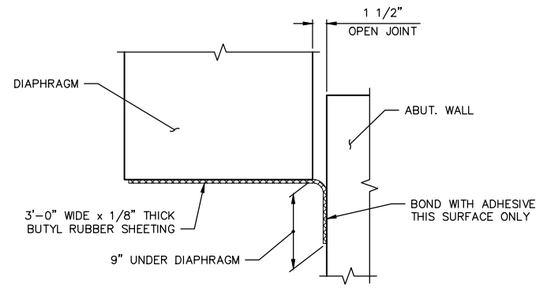

SECTION C

NOTES:
1. GIRDERS SHALL BE HELD RIGIDLY IN PLACE WHEN DIAPHRAGMS ARE PLACED.
2. CUT/RELEASE GIRDER TEMPORARY STRANDS BEFORE CASTING DIAPHRAGM. SEE TEMPORARY STRAND CUTTING SEQUENCE.
3. EXTENDED STRANDS AND GIRDER REINFORCING NOT SHOWN FOR CLARITY.

ROBERT D. RICHARDSON STATE OF WASHINGTON 13999 REGISTERED PROFESSIONAL ENGINEER

NO.	DATE	BY	APPR.	REVISIONS

Approved By

TRANSPORTATION DESIGN MANAGER — DATE
S. COSTA
PROJECT MANAGER — DATE

E. CLARK
DESIGNED BY — DATE
H. GONSIOR
DRAWN BY — DATE
R. RICHARDSON
CHECKED BY — DATE

City of Bellevue
TRANSPORTATION DEPARTMENT

HDR

NE SPRING BLVD - ZONE 1B
90% DESIGN

EAST BRIDGE
END DIAPHRAGM DETAILS 1 OF 2

SHEET NAME BRE23

SHT 166 OF 185

NO.	DATE	BY	APPR.	REVISIONS

Approved By

TRANSPORTATION DESIGN MANAGER DATE

S. COSTA

PROJECT MANAGER DATE

E. CLARK
DESIGNED BY DATE

H. GONSIOR
DRAWN BY DATE

R. RICHARDSON
CHECKED BY DATE

City of Bellevue
TRANSPORTATION DEPARTMENT

HDR

NE SPRING BLVD - ZONE 1B
90% DESIGN

EAST BRIDGE
END DIAPHRAGM DETAILS 2 OF 2

SHEET NAME BRE24

SHT 167 OF 185

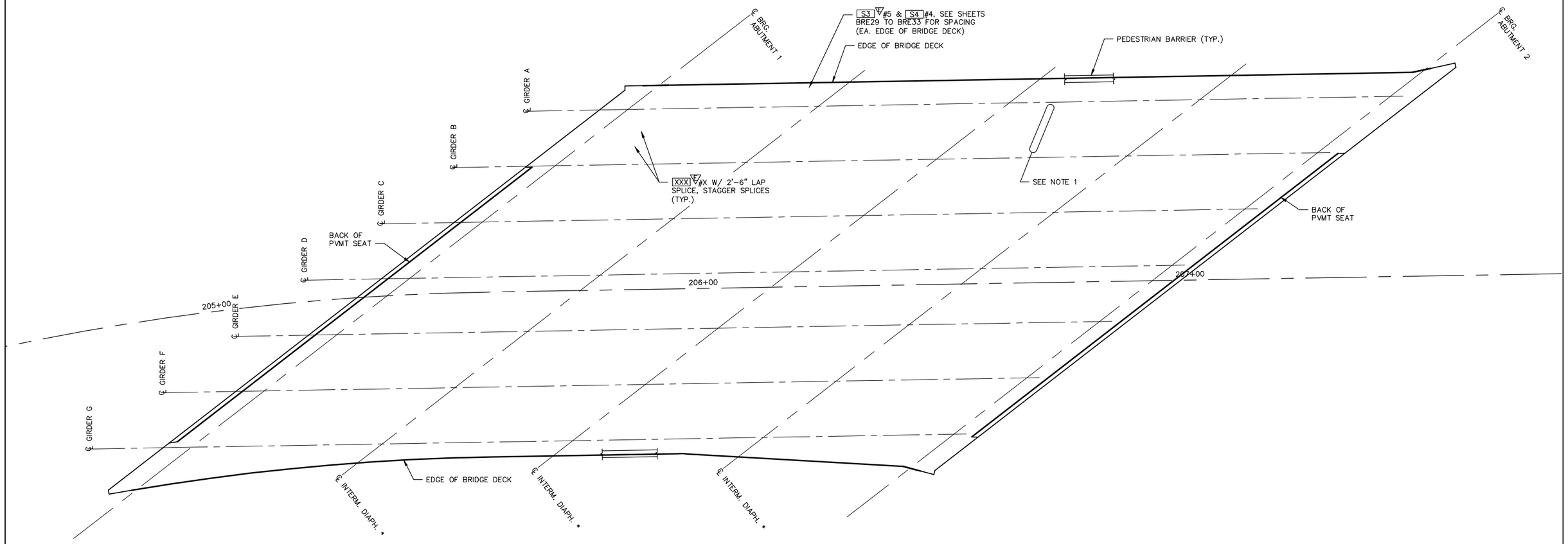

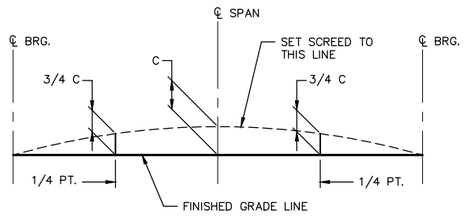

SCREED SETTING DIMENSIONS
FOR DIMENSION "C" SEE GIRDER SCHEDULE

* SEE SHEET BRE22 FOR INTERMEDIATE DIAPHRAGM REINFORCING

BRIDGE DECK REINFORCEMENT PLAN – BOTTOM

NOTES:

1. REINFORCEMENT BETWEEN GIRDERS B THROUGH G SAME AS GIRDER BAY A–B.
2. SEE SHEETS BRE35 AND BRE36 FOR UTILITY HANGER CONNECTION DETAILS.

ROBERT D. RICHARDSON — STATE OF WASHINGTON — 33999 — REGISTERED PROFESSIONAL ENGINEER

NO.	DATE	BY	APPR.	REVISIONS

Approved By

TRANSPORTATION DESIGN MANAGER — DATE
S. COSTA
PROJECT MANAGER — DATE

E. CLARK — DESIGNED BY — DATE
H. GONSIOR — DRAWN BY — DATE
R. RICHARDSON — CHECKED BY — DATE

City of Bellevue
TRANSPORTATION DEPARTMENT

HDR

NE SPRING BLVD - ZONE 1B
90% DESIGN

EAST BRIDGE
BRIDGE DECK REINFORCEMENT PLAN - BOT

SHEET NAME **BRE25**

SHT 168 OF 185

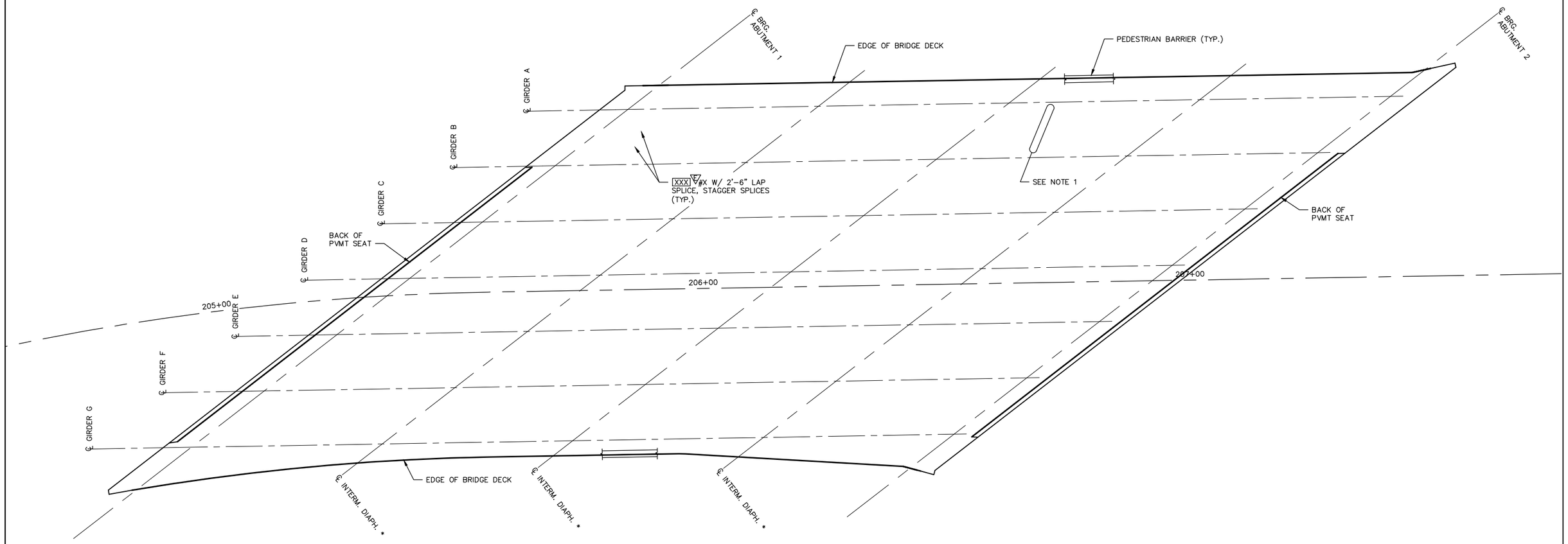

* SEE SHEET BRE22 FOR INTERMEDIATE DIAPHRAGM REINFORCING

BRIDGE DECK REINFORCEMENT PLAN – TOP

NOTES:

1. REINFORCEMENT BETWEEN GIRDERS B THROUGH G SAME AS GIRDER BAY A–B.

ROBERT D. RICHARDSON — STATE OF WASHINGTON — 33999 — REGISTERED PROFESSIONAL ENGINEER

NO.	DATE	BY	APPR.	REVISIONS

Approved By

TRANSPORTATION DESIGN MANAGER — DATE
S. COSTA
PROJECT MANAGER — DATE

E. CLARK — DESIGNED BY — DATE
H. GONSIOR — DRAWN BY — DATE
R. RICHARDSON — CHECKED BY — DATE

City of Bellevue
TRANSPORTATION DEPARTMENT

HDR

NE SPRING BLVD - ZONE 1B
90% DESIGN

EAST BRIDGE
BRIDGE DECK REINFORCEMENT PLAN - TOP

SHEET NAME **BRE26**

SHT 169 OF 185

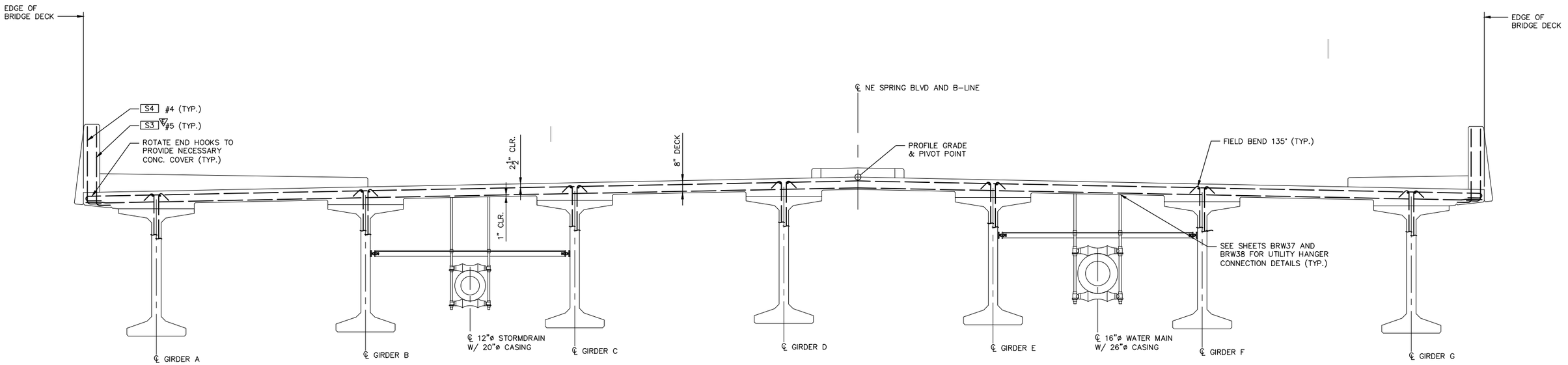

BRIDGE DECK REINFORCEMENT SECTION

SECTION SHOWN NEAR MIDSPAN

NO.	DATE	BY	APPR.	REVISIONS

Approved By

TRANSPORTATION DESIGN MANAGER — DATE
S. COSTA
PROJECT MANAGER — DATE

E. CLARK — DESIGNED BY — DATE
H. GONSIOR — DRAWN BY — DATE
R. RICHARDSON — CHECKED BY — DATE

City of Bellevue
TRANSPORTATION DEPARTMENT

HDR

NE SPRING BLVD - ZONE 1B
90% DESIGN

EAST BRIDGE
BRIDGE DECK REINF. TYPICAL SECTION

SHEET NAME **BRE27**

SHT 170 OF 185

ROBERT D. RICHARDSON
STATE OF WASHINGTON
33999
REGISTERED
PROFESSIONAL ENGINEER

NO.	DATE	BY	APPR.	REVISIONS

Approved By

TRANSPORTATION DESIGN MANAGER DATE

S. COSTA
PROJECT MANAGER DATE

E. CLARK
DESIGNED BY DATE

H. GONSIOR
DRAWN BY DATE

R. RICHARDSON
CHECKED BY DATE

City of Bellevue
TRANSPORTATION DEPARTMENT

HDR

NE SPRING BLVD - ZONE 1B
90% DESIGN

EAST BRIDGE
CONCRETE CURB DETAILS

SHEET NAME BRE28

ROBERT D. RICHARDSON
STATE OF WASHINGTON
33999
REGISTERED
PROFESSIONAL ENGINEER

NO.	DATE	BY	APPR.	REVISIONS

Approved By

TRANSPORTATION DESIGN MANAGER DATE

S. COSTA
PROJECT MANAGER DATE

E. CLARK
DESIGNED BY DATE

H. GONSIOR
DRAWN BY DATE

R. RICHARDSON
CHECKED BY DATE

City of Bellevue
TRANSPORTATION DEPARTMENT

HDR

NE SPRING BLVD - ZONE 1B
90% DESIGN

EAST BRIDGE
PEDESTRIAN BARRIER ELEVATIONS

SHEET NAME BRE29

SHT 172 OF 185

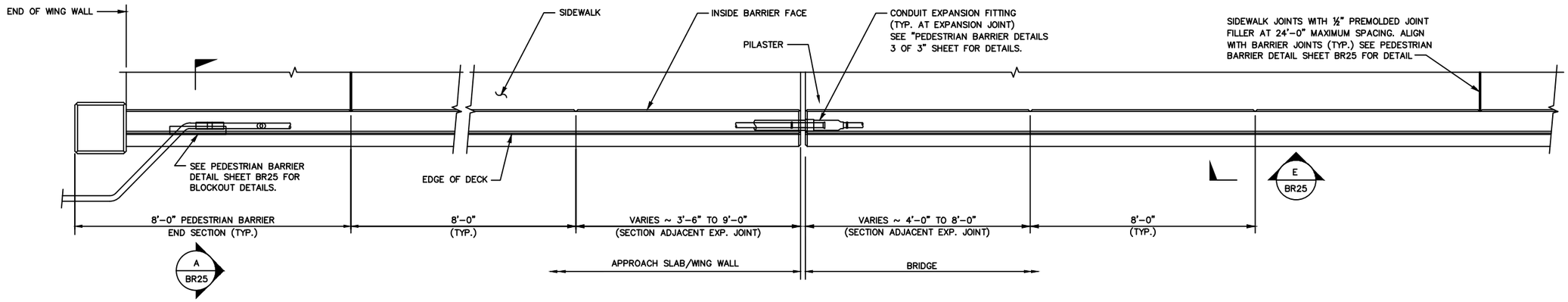

TERMINATE EACH CONDUIT PIPE AT SEPARATE JUNCTION BOXES OFF END OF BRIDGE AS SHOWN ON LAYOUT.

PEDESTRIAN BARRIER – PARTIAL PLAN

CONSTRUCTION JOINTS WITH SHEAR KEYS ARE PERMISSIBLE AT DUMMY JOINT LOCATIONS. FORM JOINTS BETWEEN DUMMY JOINTS SHALL NOT BE PERMITTED.

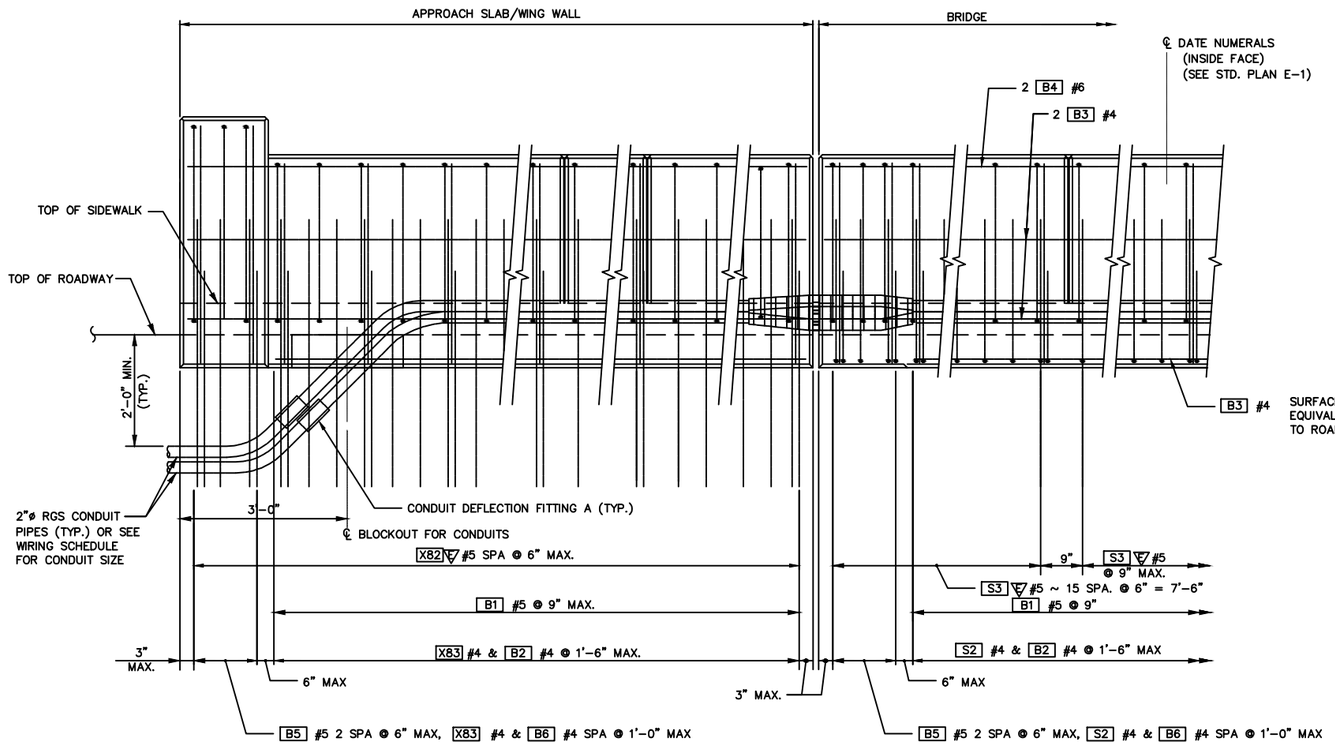

PEDESTRIAN BARRIER – PARTIAL OUTSIDE ELEVATION

SHOWN WITH WING WALL

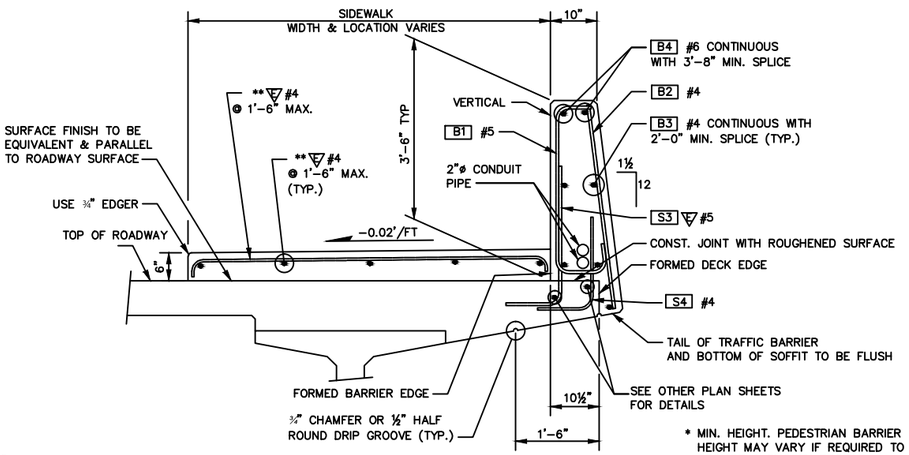

* MIN. HEIGHT. PEDESTRIAN BARRIER HEIGHT MAY VARY IF REQUIRED TO PROVIDE A SMOOTH PROFILE.

** Include in Superstructure Barlist.

TYPICAL SECTION

PEDESTRIAN BARRIER (SHOWN ON BRIDGE)

ROBERT D. RICHARDSON STATE OF WASHINGTON 33999 REGISTERED PROFESSIONAL ENGINEER

NO.	DATE	BY	APPR.	REVISIONS

Approved By

TRANSPORTATION DESIGN MANAGER DATE
S. COSTA
PROJECT MANAGER DATE

E. CLARK — DESIGNED BY DATE
H. GONSIOR — DRAWN BY DATE
R. RICHARDSON — CHECKED BY DATE

City of Bellevue
TRANSPORTATION DEPARTMENT

HDR

NE SPRING BLVD - ZONE 1B
90% DESIGN

EAST BRIDGE
PEDESTRIAN BARRIER DETAILS 1 OF 3

SHEET NAME BRE30

GENERAL NOTES:

1. FOR BARRIER DETAILS NOT SHOWN SEE "OUTSIDE ELEVATION" AND "TYPICAL SECTION ~ PEDESTRIAN BARRIER"
2. FOR WINGWALL REINFORCING NOT SHOWN SEE WINGWALL PLANS
3. FOR DIAPHRAGM REINFORCING NOT SHOWN SEE ABUTMENT DETAILS

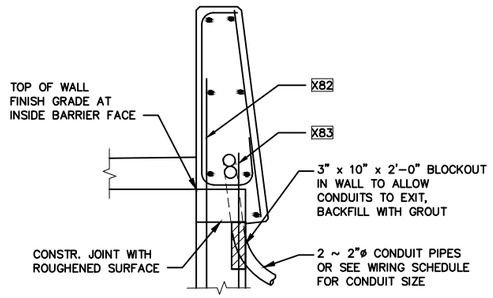

SECTION A
WINGWALL — BR23, BR24

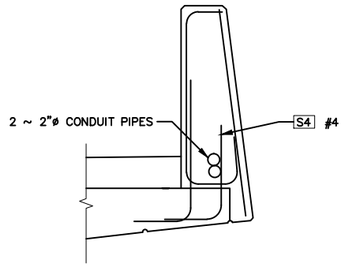

SECTION B
BRIDGE — BR23

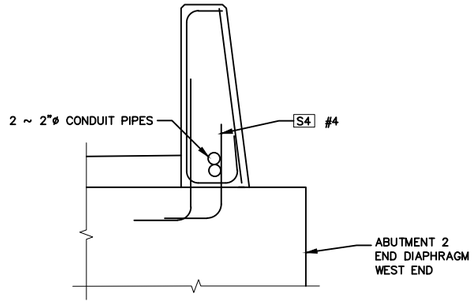

SECTION C
ABUTMENT 2 WEST — BR23

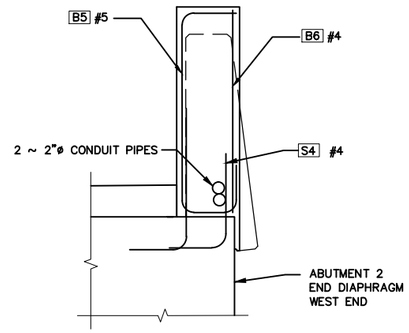

SECTION D
ABUTMENT W/ PILASTER — BR23

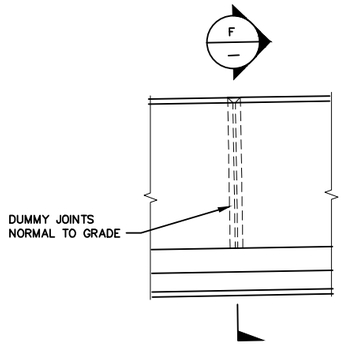

VIEW E
BR24

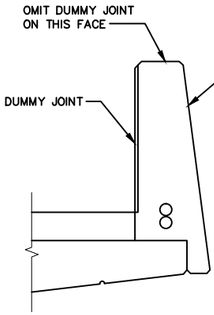

SECTION F
–

BARRIER – BENDING DIAGRAM

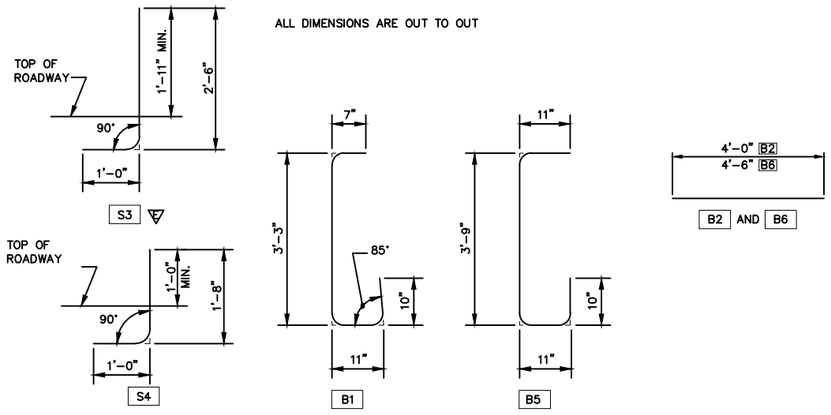

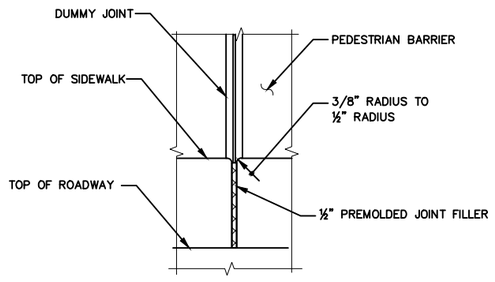

SIDEWALK JOINT DETAIL
SIDEWALK REINFORCING STEEL NOT SHOWN FOR CLARITY.

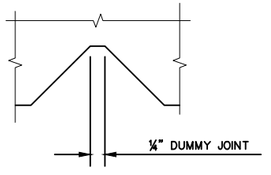

DUMMY JOINT DETAIL

ROBERT D. RICHARDSON
STATE OF WASHINGTON
33999
REGISTERED
PROFESSIONAL ENGINEER

NO.	DATE	BY	APPR.	REVISIONS

Approved By

TRANSPORTATION DESIGN MANAGER — DATE
S. COSTA
PROJECT MANAGER — DATE

E. CLARK — DESIGNED BY — DATE
H. GONSIOR — DRAWN BY — DATE
R. RICHARDSON — CHECKED BY — DATE

City of Bellevue
TRANSPORTATION DEPARTMENT

HDR

NE SPRING BLVD - ZONE 1B
90% DESIGN

EAST BRIDGE
PEDESTRIAN BARRIER DETAILS 2 OF 3

SHEET NAME BRE31

SHT 174 OF 185

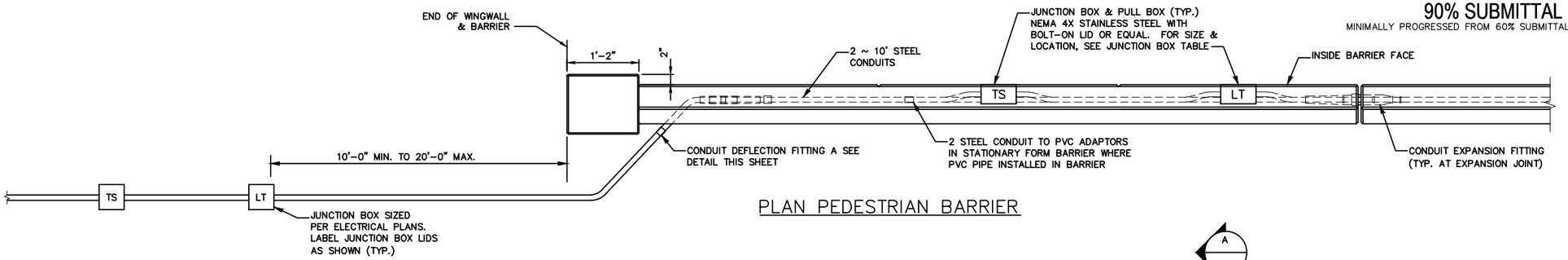

PLAN PEDESTRIAN BARRIER

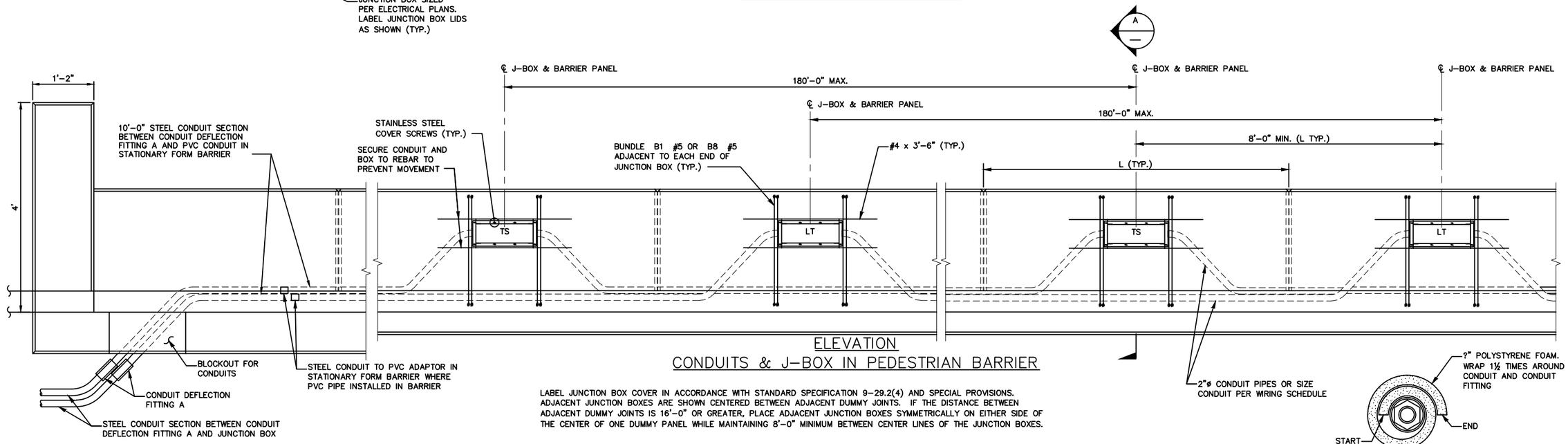

ELEVATION
CONDUITS & J-BOX IN PEDESTRIAN BARRIER

LABEL JUNCTION BOX COVER IN ACCORDANCE WITH STANDARD SPECIFICATION 9-29.2(4) AND SPECIAL PROVISIONS. ADJACENT JUNCTION BOXES ARE SHOWN CENTERED BETWEEN ADJACENT DUMMY JOINTS. IF THE DISTANCE BETWEEN ADJACENT DUMMY JOINTS IS 16'-0" OR GREATER, PLACE ADJACENT JUNCTION BOXES SYMMETRICALLY ON EITHER SIDE OF THE CENTER OF ONE DUMMY PANEL WHILE MAINTAINING 8'-0" MINIMUM BETWEEN CENTER LINES OF THE JUNCTION BOXES.

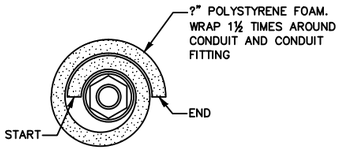

SECTION B
N.T.S.

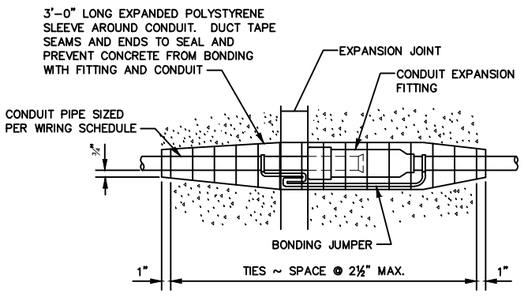

CONDUIT EXPANSION FITTING

CONDUIT FITTING – (TYPE AX FOR MOVEMENT OF ± 2") AT BRIDGE EXPANSION JOINTS

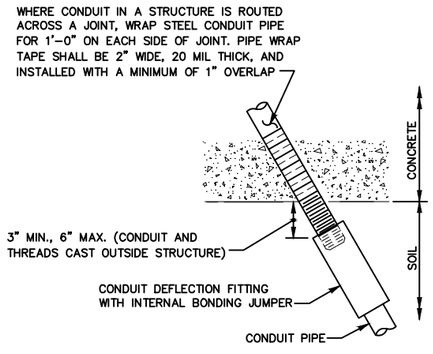

CONDUIT DEFLECTION FITTING A

CONDUIT FITTING – TYPE DX FOR DEFLECTION OF 30° AND ¾" MOVEMENT. PLACE AT CONDUIT PIPE EXIT FROM STRUCTURE

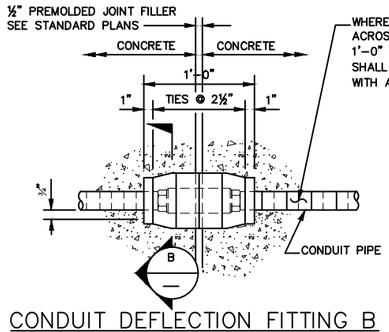

CONDUIT DEFLECTION FITTING B

CONDUIT FITTING – TYPE DX FOR DEFLECTION OF 30° AND ¾" MOVEMENT. CONDUIT PIPES PLACED THROUGH RETAINING WALL PEDESTRIAN BARRIER SHALL BE FITTED WITH DEFLECTION FITTINGS AT A MAXIMUM SPACING OF 120'. THE DEFLECTION FITTINGS SHALL BE PLACED AT THE PEDESTRIAN BARRIER OPEN JOINT THAT COINCIDES WITH THE RETAINING WALL STEM EXPANSION JOINT NEAREST TO THE TRANSVERSE CONSTRUCTION JOINT IN THE WALL FOOTING.

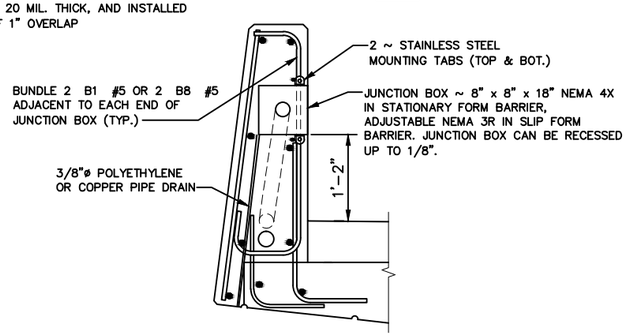

SECTION A
N.T.S.

ROBERT D. RICHARDSON STATE OF WASHINGTON 33999 REGISTERED PROFESSIONAL ENGINEER

NO.	DATE	BY	APPR.	REVISIONS

Approved By

TRANSPORTATION DESIGN MANAGER DATE
S. COSTA
PROJECT MANAGER DATE

E. CLARK DESIGNED BY DATE
H. GONSIOR DRAWN BY DATE
R. RICHARDSON CHECKED BY DATE

City of Bellevue
TRANSPORTATION DEPARTMENT

HDR

NE SPRING BLVD - ZONE 1B
90% DESIGN

EAST BRIDGE
PEDESTRIAN BARRIER DETAILS 3 OF 3

SHEET NAME BRE32

SHT 175 OF 185

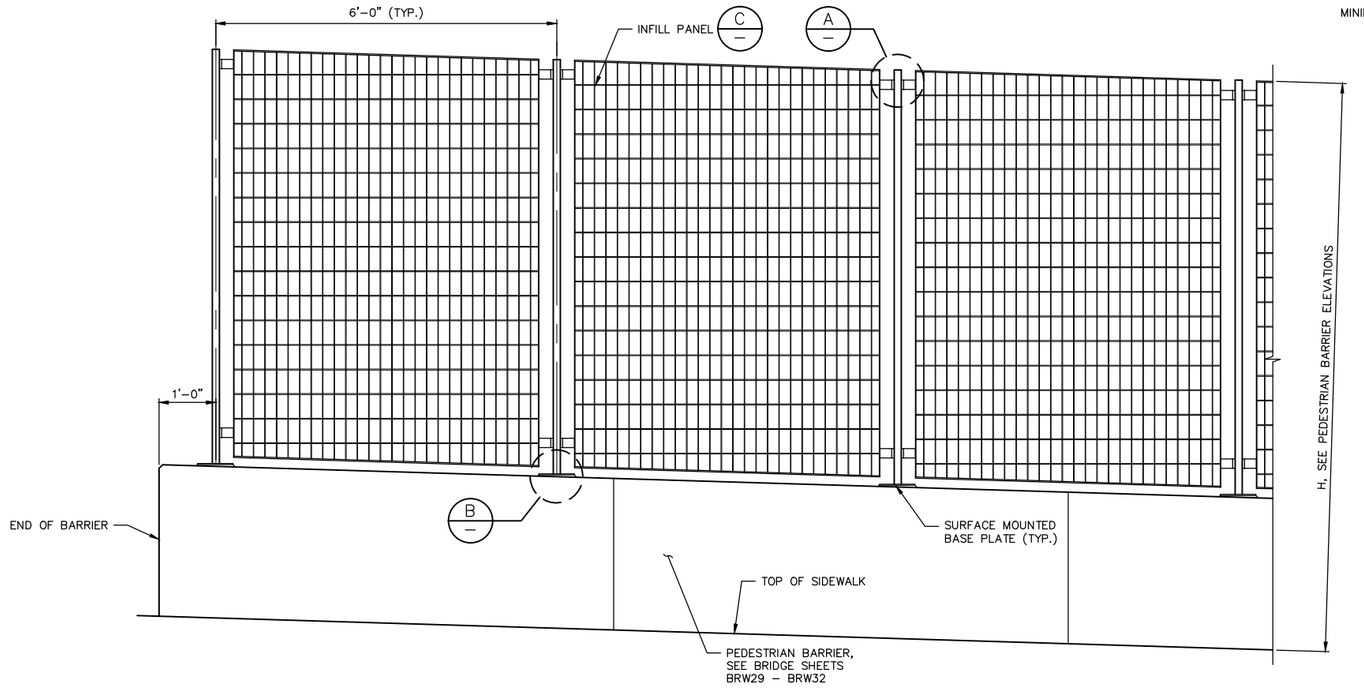

THROW FENCE

NOTES:

1. SEE LANDSCAPE AND URBAN DESIGN PLANS FOR THROW FENCE LAYOUT AND DIMENSIONS NOT SHOWN.
2. INSTALL ALL FENCE POSTS PLUMB.
3. SEE LANDSCAPE AND URBAN DESIGN PLANS FOR PEDESTRIAN RAILING DETAILS.

NOTE TO REVIEWER:
THROW FENCE MATERIALS, DESIGN, AND CALCULATIONS TO BE DETERMINED PENDING OCTOBER 2015 COORDINATION WITH PLANNING AND TRANSPORTATION DEPARTMENTS.

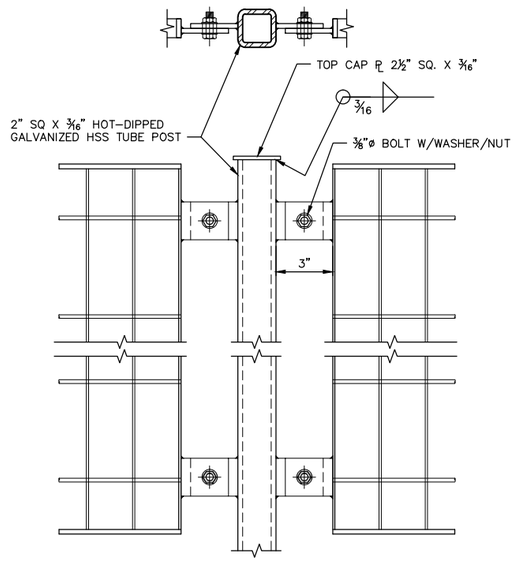

DETAIL A
N.T.S.

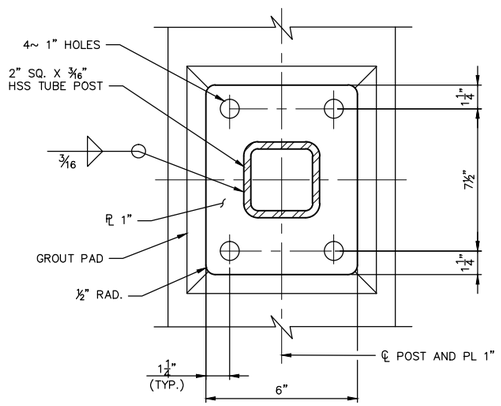

PLAN

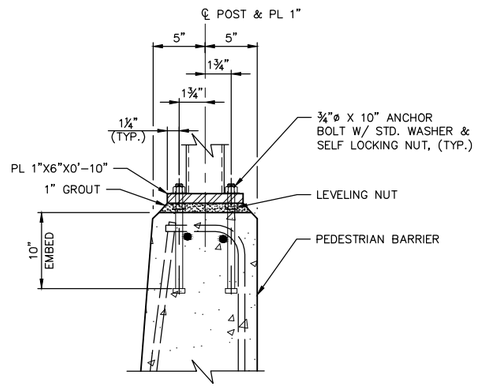

SECTION

DETAIL B
N.T.S.

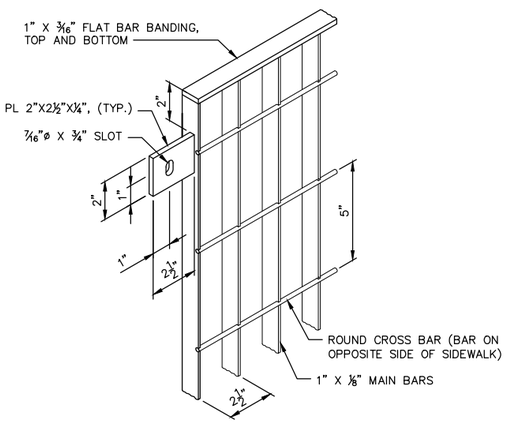

DETAIL C
N.T.S.

ROBERT D. RICHARDSON
STATE OF WASHINGTON
13009
REGISTERED
PROFESSIONAL ENGINEER

NO.	DATE	BY	APPR.	REVISIONS

Approved By

TRANSPORTATION DESIGN MANAGER — DATE
S. COSTA
PROJECT MANAGER — DATE

E. CLARK — DESIGNED BY — DATE
H. GONSIOR — DRAWN BY — DATE
R. RICHARDSON — CHECKED BY — DATE

City of Bellevue
TRANSPORTATION DEPARTMENT

HDR

NE SPRING BLVD - ZONE 1B
90% DESIGN

EAST BRIDGE
THROW FENCE ANCHORAGE DETAILS

SHEET NAME BRE33

ROBERT D. RICHARDSON
STATE OF WASHINGTON
33999
REGISTERED
PROFESSIONAL ENGINEER

NO.	DATE	BY	APPR.	REVISIONS

Approved By

TRANSPORTATION DESIGN MANAGER DATE

S. COSTA
PROJECT MANAGER DATE

E. CLARK
DESIGNED BY DATE

H. GONSIOR
DRAWN BY DATE

R. RICHARDSON
CHECKED BY DATE

City of Bellevue
TRANSPORTATION DEPARTMENT

HDR

NE SPRING BLVD - ZONE 1B
90% DESIGN

EAST BRIDGE
LUMINAIRE ANCHORAGE DETAILS

SHEET NAME BRE34

SHT 177 OF 185

D
BRE29

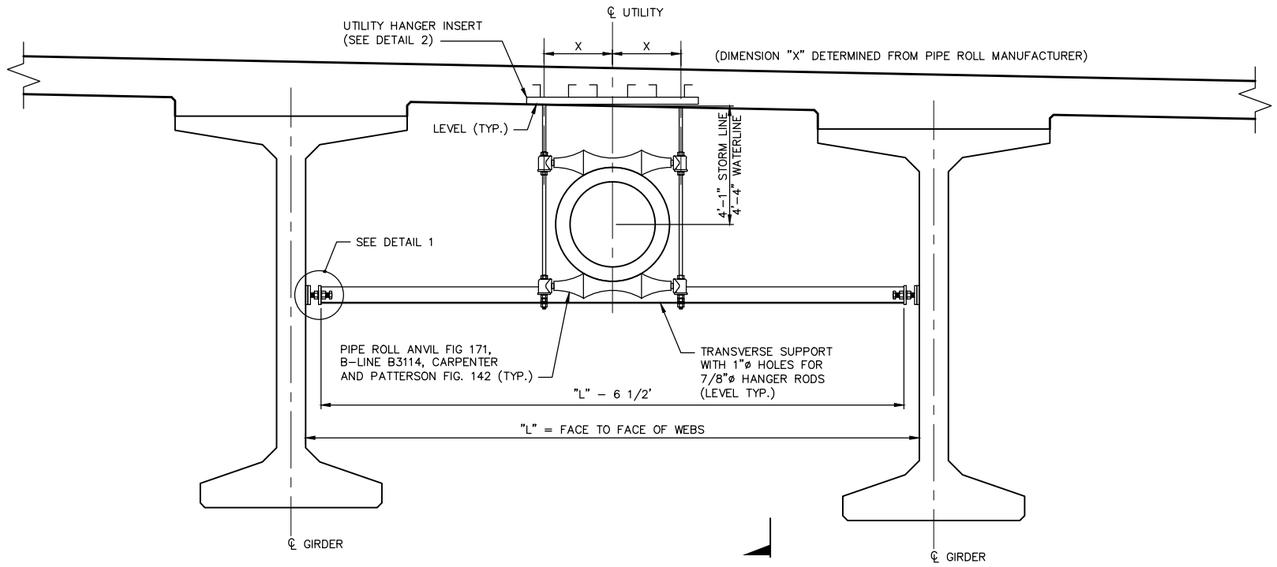

HANGER UTILITY SUPPORT DETAIL

N.T.S.
(UTILITY HANGERS LOCATION SHOWN AS SCHEMATIC ONLY. SEE ABUTMENT PLAN & ELEVATION AND FRAMING PLAN FOR LOCATION.)

B
A

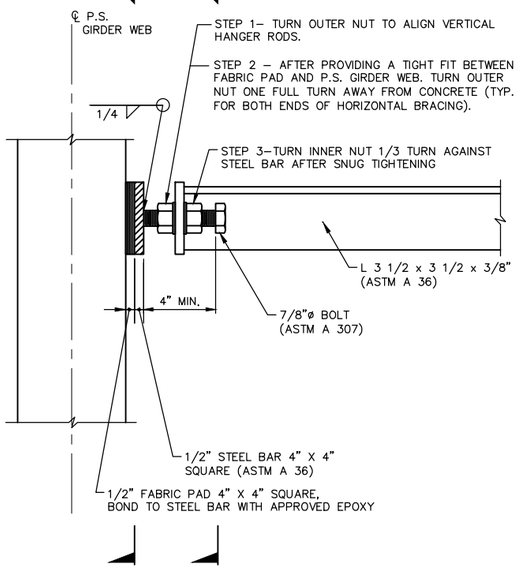

DETAIL 1
N.T.S.

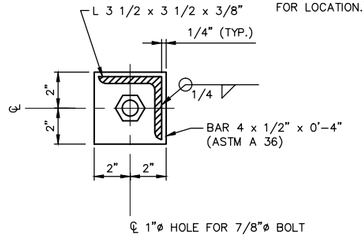

SECTION A
N.T.S.

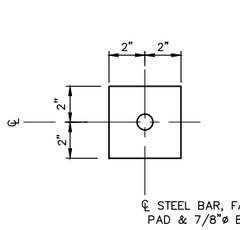

SECTION B
N.T.S.

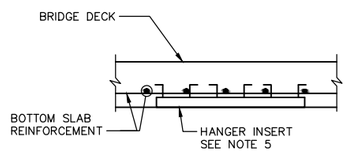

DETAIL 2
N.T.S.

GENERAL NOTES:

1. ALL MATERIALS SHALL BE GALVANIZED AFTER FABRICATION IN ACCORDANCE WITH AASHTO M 111 OR AASHTO M 232 EXCEPT PIPE ROLLS.
2. PAINT PIPE ROLLS WITH THREE COATS OF GALVANIZING REPAIR PAINT IN ACCORDANCE WITH STD. SPEC. 9-08.1(2)B.
3. WHERE UTILITY EXPANSION JOINTS ARE LOCATED, PROVIDE HANGER SUPPORTS AT EACH END OF JOINTS IN ACCORDANCE WITH RECOMMENDATIONS BY MANUFACTURER OF UTILITY JOINT.
4. CONTRACTOR SHALL VERIFY THE CASING DIAMETER AND PIPE ROLLS WITH UTILITIES AND ADJUST DIMENSIONS AS NECESSARY.
5. UTILITY HANGER INSERT SHALL BE EITHER COOPER B-LINE B22-I-XX, POWERSTRUT PS 349-XX, UNISTRUT P32XX, OR APPROVED EQUAL WITH SPRING NUT. HANGER SIZE (VARIABLE 'XX') SHALL BE DETERMINED BY THE CONTRACTOR & ADJUSTED TO MATCH PIPE ROLL. INSERT TO BE INSTALLED LEVEL LONGITUDINALLY AND TRANSVERSELY. PLACE INSERT TO PROVIDE FOR TRANSVERSE ADJUSTMENT OF HANGER RODS.
6. CHASE THREADS ON HANGER ROD FOR THREAD COMPATIBILITY WITH SPRING NUT. HANGER RODS SHALL NOT BE WITHIN 2" OF THE END OF THE INSERT.
7. WATER LINE INSULATION SHALL TERMINATE AT THE FACE OF END DIAPHRAGM, AND PENETRATION SEAL.

NO.	DATE	BY	APPR.	REVISIONS

Approved By

TRANSPORTATION DESIGN MANAGER — DATE
S. COSTA
PROJECT MANAGER — DATE

E. CLARK — DESIGNED BY — DATE
H. GONSIOR — DRAWN BY — DATE
R. RICHARDSON — CHECKED BY — DATE

City of Bellevue
TRANSPORTATION DEPARTMENT

HDR

NE SPRING BLVD - ZONE 1B
90% DESIGN

EAST BRIDGE
UTILITY HANGER DETAILS 1 OF 2

SHEET NAME BRE35

SHT 178 OF 185

GENERAL NOTES:

1. SET POSITION OF EXPANSION FITTING BASED ON MANUFACTURER RECOMMENDATIONS AND TEMPERATURE AT TIME OF INSTALLATION.
2. EXPANSION FITTINGS SHALL BE INSTALLED EVERY 100'–0" MAX. AND SHALL ACCOMMODATE 5.1 INCHES OF MOVEMENT. THE DESIGN TEMPERATURE RANGE IS 125 DEGREES (–15° TO 110°)
3. SEE SHEET BRE27 FOR CONDUIT DEFLECTION FITTING A DETAIL.

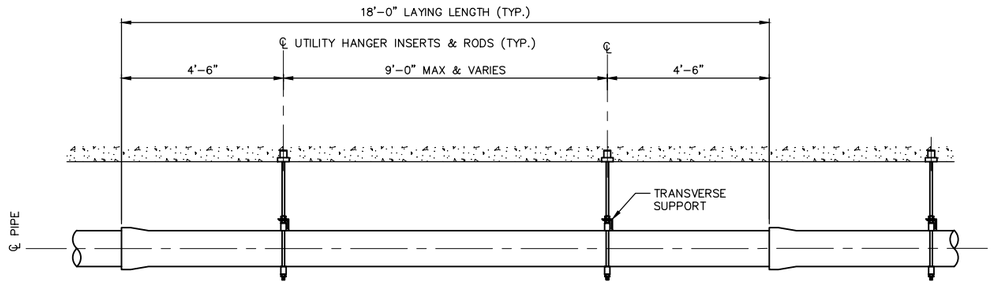

SECTION D
N.T.S. BRE28

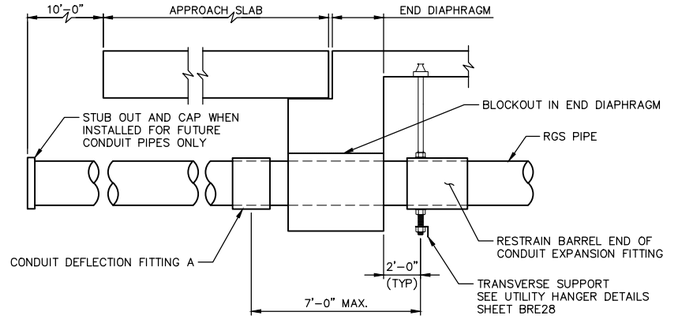

UTILITY CONDUIT PLACEMENT DETAIL
N.T.S. RIGID GALVANIZED STEEL (RGS)

ROBERT D. RICHARDSON STATE OF WASHINGTON 33999 REGISTERED PROFESSIONAL ENGINEER

NO.	DATE	BY	APPR.	REVISIONS

Approved By

TRANSPORTATION DESIGN MANAGER DATE
S. COSTA
PROJECT MANAGER DATE

E. CLARK
DESIGNED BY DATE
H. GONSIOR
DRAWN BY DATE
R. RICHARDSON
CHECKED BY DATE

City of Bellevue
TRANSPORTATION DEPARTMENT

HDR

NE SPRING BLVD - ZONE 1B
90% DESIGN

EAST BRIDGE
UTILITY HANGER DETAILS 2 OF 2

SHEET NAME **BRE36**

SHT 179 OF 185

NO.	DATE	BY	APPR.	REVISIONS

Approved By

TRANSPORTATION DESIGN MANAGER DATE
S. COSTA
PROJECT MANAGER DATE

E. CLARK
DESIGNED BY DATE
H. GONSIOR
DRAWN BY DATE
R. RICHARDSON
CHECKED BY DATE

City of Bellevue
TRANSPORTATION DEPARTMENT

HDR

NE SPRING BLVD - ZONE 1B
90% DESIGN

EAST BRIDGE
ILLUMINATION DETAILS

SHEET NAME BRE37

SHT 180 OF 185

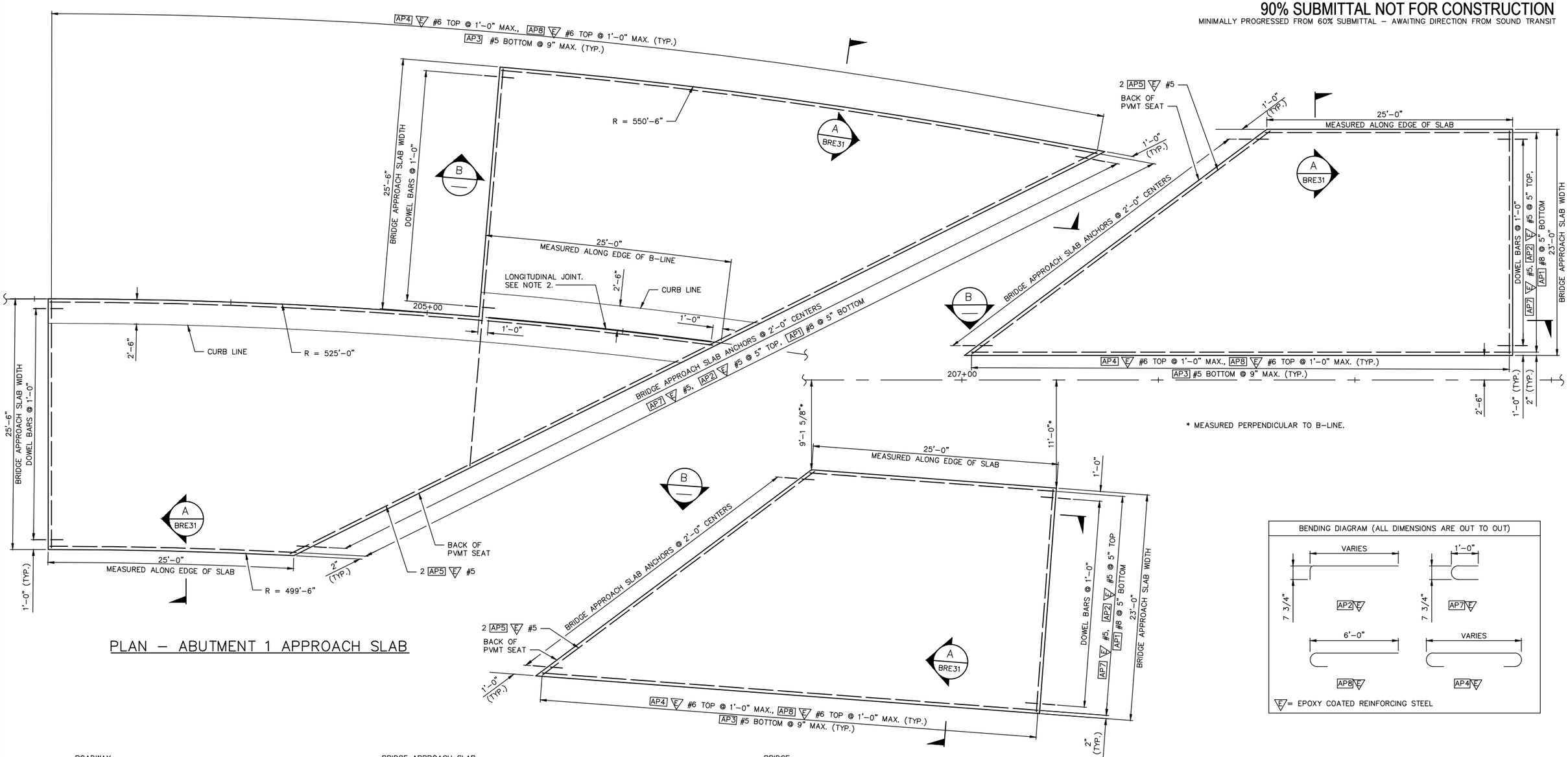

PLAN – ABUTMENT 1 APPROACH SLAB

PLAN – ABUTMENT 2 APPROACH SLAB

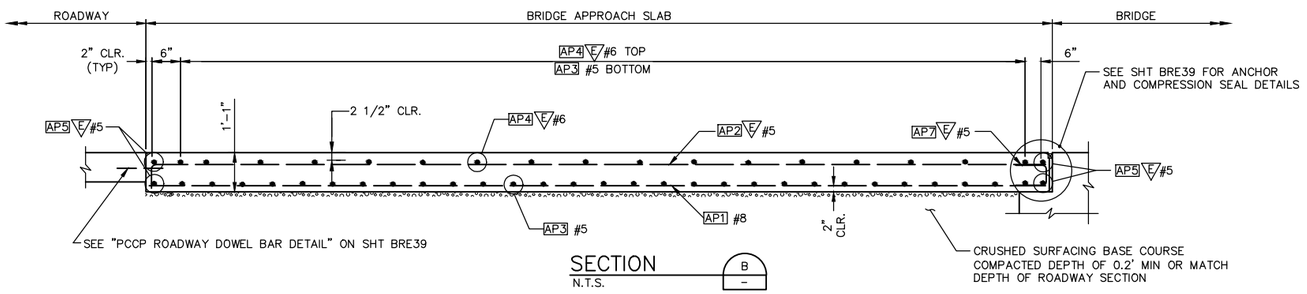

SECTION B – N.T.S.

BENDING DIAGRAM (ALL DIMENSIONS ARE OUT TO OUT)

E = EPOXY COATED REINFORCING STEEL

GENERAL NOTES:

1. ALL EDGES OF BRIDGE APPROACH SLAB SHALL HAVE 1/2" RADIUS EXCEPT AT LONGITUDINAL JOINTS.
2. LONGITUDINAL JOINTS SHALL BE PLACED ALONG B–LINE CONSTRUCTED AND SEALED IN ACCORDANCE WITH STD. SPEC. SECTION 5–05.3(8). JOINTS MAY BE EITHER A SAWCUT CRACK CONTROL JOINT OR A CONSTRUCTION JOINT. SAWCUT JOINTS SHALL TERMINATE 1'–0" BEFORE REACHING EDGE OF SLAB AND MUST BE SAWCUT AS SOON AS POSSIBLE AFTER PLACEMENT OF CONCRETE. SEE "LONGITUDINAL JOINT DETAIL" ON SHEET BRE39.
3. THE MINIMUM LAP SPLICE OF #5 IS 2'–0", E #5 IS 2'–6", E #6 IS 3'–0", AND #8 IS 3'–3". ALL LAP SPLICES SHALL BE STAGGERED SO THAT NO MORE THAN 50% OF REBAR IS SPLICED AT THE SAME LOCATION. LAP SPLICES SHALL BE LOCATED WITHIN THE MIDDLE HALF OF THE BRIDGE APPROACH SLAB. OPTIONAL SPLICES ARE ALLOWED FOR AP4 E #6.
4. BAR BENDS, LENGTH, AND QUANTITIES SHOWN FOR REFERENCE. CONTRACTOR SHALL VERIFY ALL DIMENSIONS, LENGTHS, AND QUANTITIES.

ROBERT D. RICHARDSON – STATE OF WASHINGTON – 33999 – REGISTERED PROFESSIONAL ENGINEER

NO.	DATE	BY	APPR.	REVISIONS

Approved By

TRANSPORTATION DESIGN MANAGER S. COSTA DATE
PROJECT MANAGER DATE

E. CLARK
DESIGNED BY DATE
H. CONSIOR
DRAWN BY DATE
R. RICHARDSON
CHECKED BY DATE

City of Bellevue
TRANSPORTATION DEPARTMENT

HDR

NE SPRING BLVD - ZONE 1B
90% DESIGN

EAST BRIDGE
APPROACH SLAB PLAN & DETAILS 1 OF 3

SHEET NAME BRE38

SHT 181 OF 185

GENERAL NOTES:
1. UNLESS OTHERWISE NOTED, ALL DIMENSIONS ARE IN FEET AND INCHES.

90% SUBMITTAL NOT FOR CONSTRUCTION
MINIMALLY PROGRESSED FROM 60% SUBMITTAL – AWAITING DIRECTION FROM SOUND TRANSIT

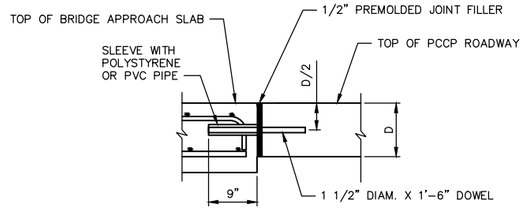

PCCP ROADWAY DOWEL BAR DETAIL
N.T.S.
INSERT DOWELS PARALLEL TO CENTER LINE ALONG TRANSVERSE CONSTRUCTION JOINT.

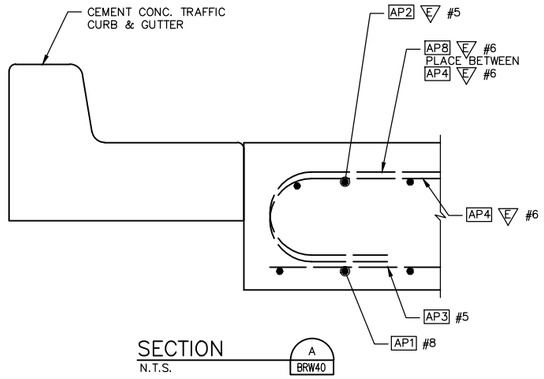

SECTION
N.T.S.

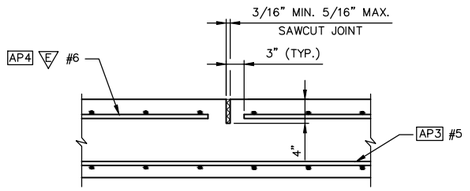

LONGITUDINAL JOINT DETAIL
N.T.S.

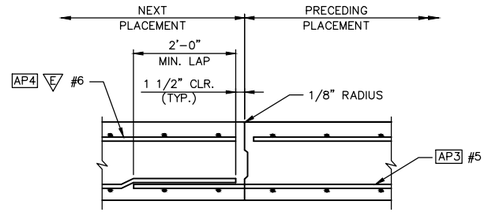

ALTERNATE LONGITUDINAL JOINT DETAIL
N.T.S.
EDGE PRECEDING PLACEMENT ONLY WITH 1/8" RADIUS

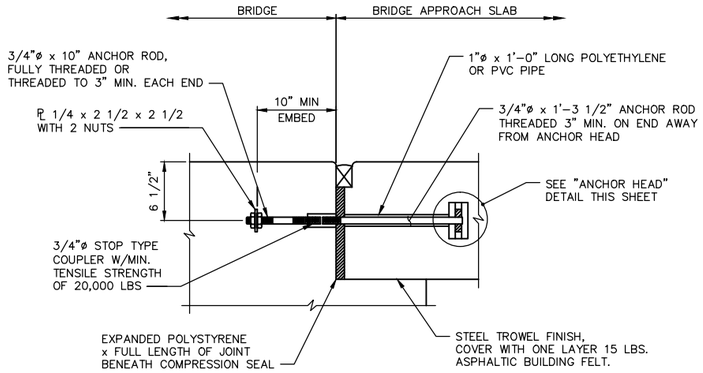

APPROACH ANCHOR – METHOD A
N.T.S.

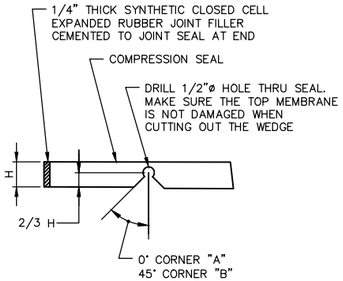

SEAL CUTTING DETAIL
N.T.S.

COMPRESSION SEAL TABLE

D.S. BROWN		WATSON BOWMAN ACME	
SEAL	W (in.)	SEAL	W (in.)
CV-2502	2 1/2"	WA-250	2 1/2"

TESTING SHALL BE PER AASHTO M-220 PRIOR TO USE.

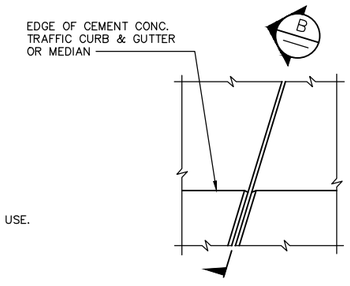

PLAN EXPANSION JOINT
N.T.S.

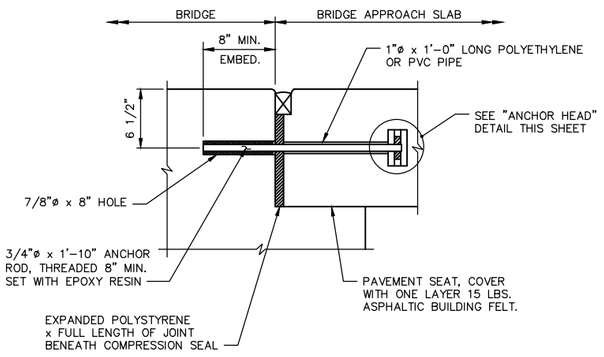

APPROACH ANCHOR – METHOD B
N.T.S.

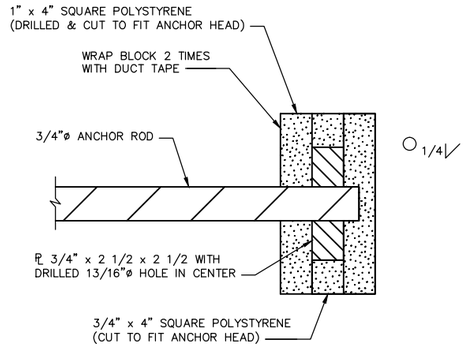

ANCHOR HEAD DETAIL
N.T.S.
ALL METAL PARTS OF APPROACH EXPANSION ANCHOR SHALL RECEIVE ONE COAT OF PAINT CONFORMING TO 9-08.1(2)F, OR BE GALVANIZED IN ACCORDANCE WITH AASHTO M232.

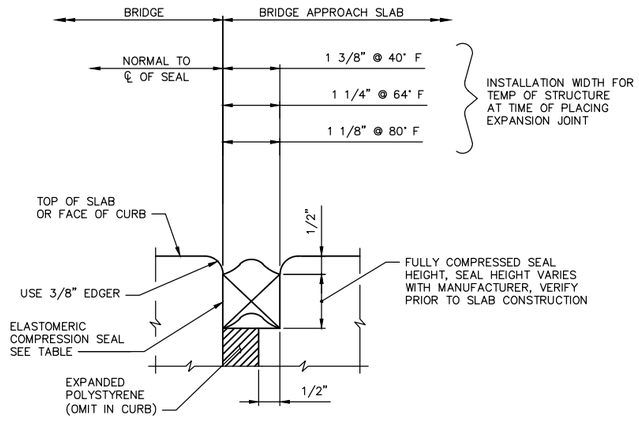

COMPRESSION SEAL DETAIL
N.T.S.
EXPANSION JOINT AT BACK OF PVMT SEAT

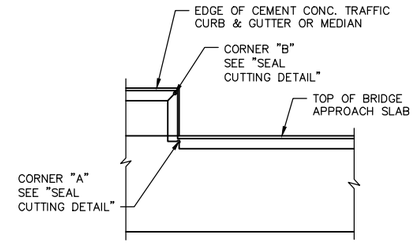

SECTION
N.T.S.

ROBERT D. RICHARDSON STATE OF WASHINGTON 33999 REGISTERED PROFESSIONAL ENGINEER

NO.	DATE	BY	APPR.	REVISIONS

Approved By

TRANSPORTATION DESIGN MANAGER DATE
S. COSTA
PROJECT MANAGER DATE

E. CLARK
DESIGNED BY DATE
H. GONSIOR
DRAWN BY DATE
R. RICHARDSON
CHECKED BY DATE

City of Bellevue
TRANSPORTATION DEPARTMENT

HDR

NE SPRING BLVD - ZONE 1B
90% DESIGN

EAST BRIDGE
APPROACH SLAB DETAILS 2 OF 3

SHEET NAME BRE39

SHT 182 OF 185

ROBERT D. RICHARDSON
STATE OF WASHINGTON
33999
REGISTERED
PROFESSIONAL ENGINEER

NO.	DATE	BY	APPR.	REVISIONS

Approved By

TRANSPORTATION DESIGN MANAGER DATE

S. COSTA
PROJECT MANAGER DATE

E. CLARK
DESIGNED BY DATE

H. GONSIOR
DRAWN BY DATE

R. RICHARDSON
CHECKED BY DATE

City of Bellevue
TRANSPORTATION DEPARTMENT

HDR

NE SPRING BLVD - ZONE 1B
90% DESIGN

EAST BRIDGE
APPROACH SLAB DETAILS 3 OF 3

SHEET NAME BRE40

SHT 183 OF 185

S = BAR IS INCLUDED IN SUBSTRUCTURE QUANTITIES
L = LUMP SUM QUANTITY
T = TRANSVERSE OR S = SEISMIC
G = BAR IS TO BE GALVANIZED
V = BAR DIMENSIONS VARY BETWEEN DIMENSIONS SHOWN ON THIS LINE AND THE FOLLOWING LINE.

MARK NO.	LOCATION	SIZE	NO. REQ'D	BEND TYPE	TIE OR STIR.	LUMP SUM	SUBSTR.	GALVANIZED	VARIES	NO. EACH	DIMENSIONS (OUT TO OUT)												LENGTH		WEIGHT
											U		W		X		Y		Z		θ1	θ2			
											Ft.	In.	Ft.	In.	Ft.	In.	Ft.	In.	Ft.	In.	DEG	DEG	Ft.	In.	

S = BAR IS INCLUDED IN SUBSTRUCTURE QUANTITIES
L = LUMP SUM QUANTITY
T = TRANSVERSE OR S = SEISMIC
G = BAR IS TO BE GALVANIZED
V = BAR DIMENSIONS VARY BETWEEN DIMENSIONS SHOWN ON THIS LINE AND THE FOLLOWING LINE.

MARK NO.	LOCATION	SIZE	NO. REQ'D	BEND TYPE	TIE OR STIR.	LUMP SUM	SUBSTR.	GALVANIZED	VARIES	NO. EACH	DIMENSIONS (OUT TO OUT)												LENGTH		WEIGHT
											U		W		X		Y		Z		θ1	θ2			
											Ft.	In.	Ft.	In.	Ft.	In.	Ft.	In.	Ft.	In.	DEG	DEG	Ft.	In.	

90% SUBMITTAL NOT FOR CONSTRUCTION

MINIMALLY PROGRESSED FROM 60% SUBMITTAL – AWAITING DIRECTION FROM SOUND TRANSIT

BENDING DIAGRAMS

NOTES:

1. SEE SHT ____ FOR ADDITIONAL DETAILS FOR BARRIER AND SIDEWALK.
2. SEE SHT ____ FOR ADDITIONAL DETAILS FOR APPROACH SLAB.
3. BEND FOR TRANSVERSE BARS DUE TO ROADWAY CROWN CONDITIONS HAVE NOT BEEN SHOWN. THESE BARS SHALL BE BENT AS REQUIRED TO CONFORM TO THE CONFIGURATION OF THE STRUCTURE.

NO.	DATE	BY	APPR.	REVISIONS

Approved By

TRANSPORTATION DESIGN MANAGER DATE
S. COSTA
PROJECT MANAGER DATE

E. CLARK
DESIGNED BY DATE
H. GONSIOR
DRAWN BY DATE
R. RICHARDSON
CHECKED BY DATE

City of Bellevue
TRANSPORTATION DEPARTMENT

HDR

NE SPRING BLVD - ZONE 1B
90% DESIGN

EAST BRIDGE
BAR LIST 1 OF 2

SHEET NAME BRE41

S = BAR IS INCLUDED IN SUBSTRUCTURE QUANTITIES
L = LUMP SUM QUANTITY
T = TRANSVERSE
OR S = SEISMIC
G = BAR IS TO BE GALVANIZED
V = BAR DIMENSIONS VARY BETWEEN DIMENSIONS SHOWN ON THIS LINE AND THE FOLLOWING LINE.

MARK NO.	LOCATION	SIZE	NO. REQ'D	BEND TYPE	TIE OR STIR.	LUMP SUM	SUBSTR.	GALVANIZED	VARIES	NO. EACH	DIMENSIONS (OUT TO OUT) U		W		X		Y		Z	θ_1	θ_2	LENGTH		WEIGHT
											Ft.	In.	Ft.	In.	Ft.	In.	Ft.	In.	Ft.	In.	DEG	DEG	Ft.	In.	

S = BAR IS INCLUDED IN SUBSTRUCTURE QUANTITIES
L = LUMP SUM QUANTITY
T = TRANSVERSE
OR S = SEISMIC
G = BAR IS TO BE GALVANIZED
V = BAR DIMENSIONS VARY BETWEEN DIMENSIONS SHOWN ON THIS LINE AND THE FOLLOWING LINE.

MARK NO.	LOCATION	SIZE	NO. REQ'D	BEND TYPE	TIE OR STIR.	LUMP SUM	SUBSTR.	GALVANIZED	VARIES	NO. EACH	DIMENSIONS (OUT TO OUT) U		W		X		Y		Z	θ_1	θ_2	LENGTH		WEIGHT
											Ft.	In.	Ft.	In.	Ft.	In.	Ft.	In.	Ft.	In.	DEG	DEG	Ft.	In.	

90% SUBMITTAL NOT FOR CONSTRUCTION

MINIMALLY PROGRESSED FROM 60% SUBMITTAL – AWAITING DIRECTION FROM SOUND TRANSIT

BENDING DIAGRAMS

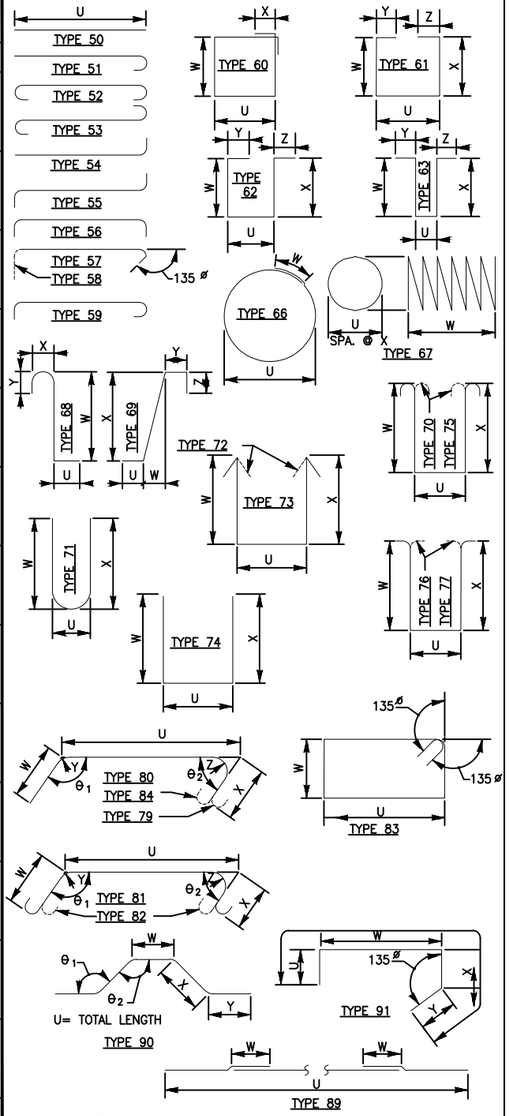

NOTES:

1. SEE SHT ___ FOR ADDITIONAL DETAILS FOR BARRIER AND SIDEWALK.
2. SEE SHT ___ FOR ADDITIONAL DETAILS FOR APPROACH SLAB.
3. BEND FOR TRANSVERSE BARS DUE TO ROADWAY CROWN CONDITIONS HAVE NOT BEEN SHOWN. THESE BARS SHALL BE BENT AS REQUIRED TO CONFORM TO THE CONFIGURATION OF THE STRUCTURE.

ROBERT D. RICHARDSON STATE OF WASHINGTON 33999 REGISTERED PROFESSIONAL ENGINEER

NO.	DATE	BY	APPR.	REVISIONS

Approved By

TRANSPORTATION DESIGN MANAGER DATE
S. COSTA
PROJECT MANAGER DATE

E. CLARK
DESIGNED BY DATE
H. GONSIOR
DRAWN BY DATE
R. RICHARDSON
CHECKED BY DATE

City of Bellevue
TRANSPORTATION DEPARTMENT

HDR

NE SPRING BLVD - ZONE 1B
90% DESIGN

EAST BRIDGE
BAR LIST 2 OF 2

SHEET NAME BRE42

SHT 185 OF 185

90% SUBMITTAL NOT FOR CONSTRUCTION

GENERAL NOTES:

1. UNLESS OTHERWISE NOTED, ALL DIMENSIONS ARE IN FEET.
2. SEE SHEET LSD1 FOR LANDSCAPE AND URBAN DESIGN LEGEND, ABBREVIATIONS, SCHEDULE AND NOTES.

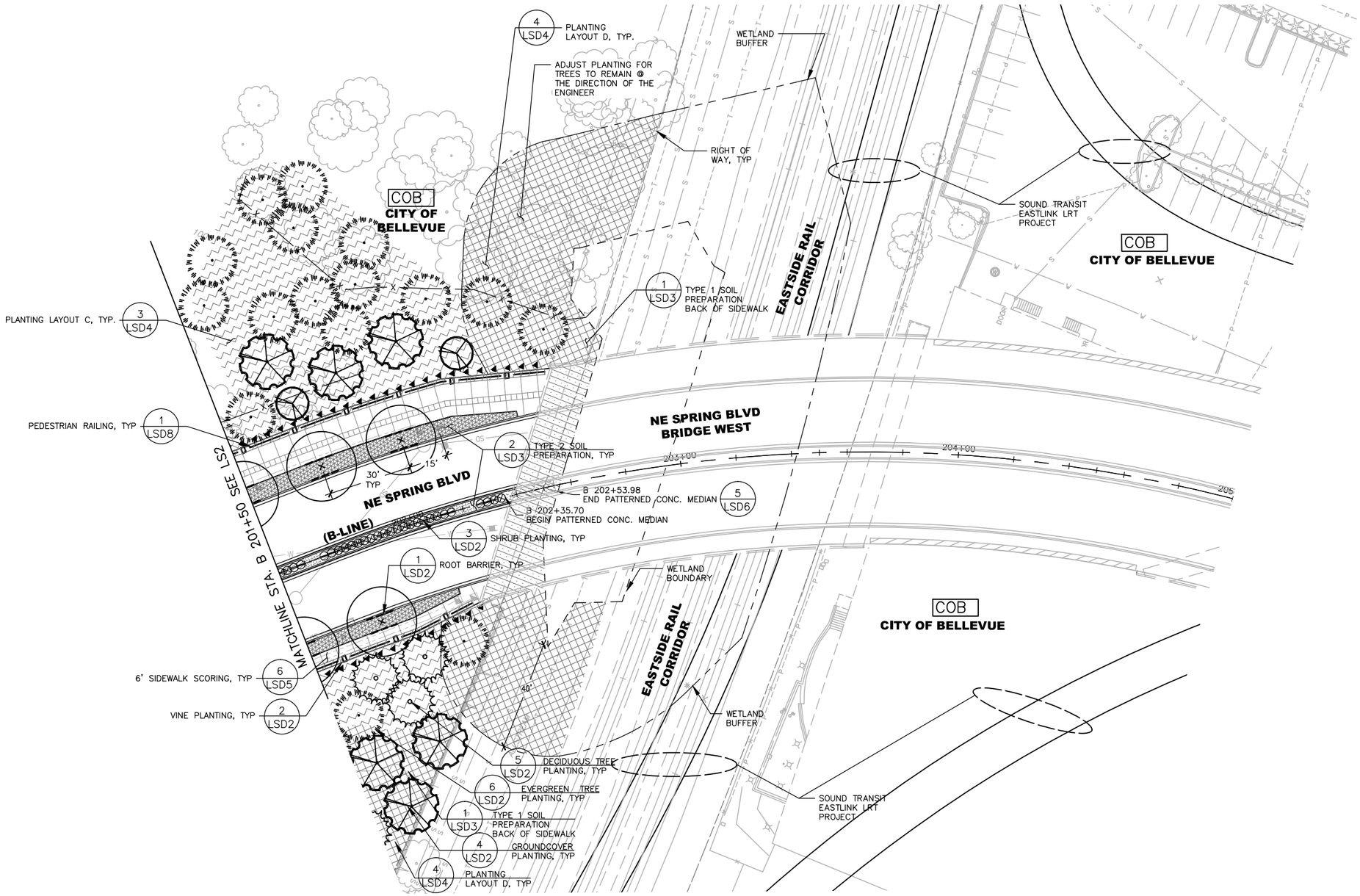

LANDSCAPE LEGEND

SYM	QTY	DESCRIPTION
+	3	MAIDENHAIR TREE
	6	SWEETGUM
	16	DOUGLAS FIR
	2	APPLE SERVICEBERRY
	3	DEODAR CEDAR
⊕	20	JAPANESE MOCK ORANGE
⊘	8	RUGOSE ROSE
▲	36	BOSTON IVY

PLANTING LAYOUT A
FOUNTAIN_GRASS
LOWFAST COTONEASTER
HAPPY RETURNS DAYLILY
CREEPING OREGON GRAPE
DAVIDII VIBURNUM
RUGOSA ROSE 'SHOWY PAVEMENT'
RUGOSA ROSE 'WHITE PAVEMENT'

PLANTING LAYOUT C
SALAL
CALIFORNIA WAX MYRTLE
TALL OREGON GRAPE
MOCK ORANGE
WESTERN SWORD FERN
RED FLOWERING CURRANT

PLANTING LAYOUT D
MIDWINTER FIRE DOGWOOD
SALAL
TALL OREGON GRAPE
CALIFORNIA WAX MYRTLE
INDIAN PLUM
WESERN SWORD FERN
COMMOON SNOWBERRY
EVERGREEN HUCKLBERRY

SALMONBERRY/ SNOWBERRY MIX
SALMON BERRY
SNOW BERRY

HAMELN FOUNTAIN GRASS

LOWFAST COTONEASTER

PATTERNED CONCRETE MEDIAN

ROOT BARRIER

— X — TREE PROTECTION FENCING

KEY PLAN

20 10 0 20 40
SCALE

STATE OF WASHINGTON LICENSED LANDSCAPE ARCHITECT

MATTHEW C. GURRAD
LICENSE NO. 1094
EXPIRES ON _____

NO.	DATE	BY	APPR.	REVISIONS

Approved By

TRANSPORTATION DESIGN MANAGER DATE
R. LOGWOOD
PROJECT MANAGER DATE

M. GURRAD DESIGNED BY DATE
J. FRYE DRAWN BY DATE
G. ROYCROFT CHECKED BY DATE

City of Bellevue
TRANSPORTATION DEPARTMENT

HDR

NE SPRING BLVD - ZONE 1A
90% DESIGN

LANDSCAPE & URBAN DESIGN PLAN
STA. B 201+50 TO END ZONE 1A

SHEET NAME LS3

SHT 61 OF 101

Critical Areas Report

NE Spring Boulevard Multi-Modal Corridor Project

Bellevue, Washington
December 2, 2015

Prepared for:

City of Bellevue Transportation Department Capital Program Services Division
450 110th Avenue NE
P.O. Box 90012
Bellevue, WA 98009-9012

Prepared by:

HDR
500 108th Avenue NE
Suite 1200
Bellevue, Washington 98004

This page intentionally left blank.

CRITICAL AREAS REPORT

NE Spring Boulevard Multi-Modal Corridor

City of Bellevue

December 2015

Prepared by:

HDR Engineering, Inc.

500 108th Avenue NE, Suite 1200

Bellevue, WA 98004

Prepared for:

City of Bellevue

Utilities Engineering 5W

450 110th Avenue NE

Bellevue, WA 98004

This page intentionally left blank.

Table of Contents

1.0 Introduction 1
1.1 Purpose of this Report 1
1.2 Project Overview 1
1.3 Project Setting 1
2.0 Project Description 5
2.1 Background 5
3.0 Applicable Regulations 6
3.1 Uses and Development in Critical Areas 7
3.2 Allowed Uses 7
3.3 General Performance Standards 8
4.0 Study Methods 9
4.1 Study Area 9
4.2 Critical Areas Identification 9
4.3 Review of Existing Information 10
5.0 Results– Wetlands 14
5.1 Wetlands and Buffers in the Study Area 14
5.2 Wetland Impacts 18
5.3 Wetland Buffer Impacts 18
5.4 Wetland Structure Setback 19
5.5 Wetland Performance Standards 22
5.6 Wetlands Mitigation and Monitoring 23
6.0 References 35

List of Figures

Figure 1. Project Vicinity Map 3
Figure 2. Wetland within the Study Area 15
Figure 3. Wetland Buffer Impact Area 20
Figure 4. Proposed Buffer Mitigation at the Project Site 27

List of Tables

Table 1. Wetland Rating System for Washington State Department of Ecology and the City of Bellevue 12
Table 2. Converting habitat function scores between Ecology's 2004 and 2014 rating systems 13
Table 3. Summary of Required Wetland Buffer Widths for the City of Bellevue 13
Table 4. Summary of Precipitation between May and July 2015 in Sea-Tac, WA 17
Table 5. Proposed Planting Palette for the Proposed Buffer Mitigation Area 25
Table 6. Contingency Measures 30
Table 7. Functional Lift Resulting from the Proposed Project/Wetland Buffer Mitigation 34

List of Appendices

Appendix A: Wetland Delineation Methodology
Appendix B: Wetland Data Sheets
Appendix C: Wetland Photographs
Appendix D: Ecology Rating Form
Appendix E: Geotechnical Report

1.0 Introduction

1.1 Purpose of this Report

This document has been prepared to address documentation needs specified within the City of Bellevue (City) Land Use Code (LUC) (20.25). It addresses critical areas as defined in the LUC that occur in the vicinity of the NE Spring Boulevard Multi-Modal Corridor (project) and that may be affected by project construction and maintenance. This report also discusses the methods that have and will be used to best avoid, minimize, and mitigate impacts to critical areas resulting from the project. Contents of this report have been prepared using guidelines presented in LUC 20.25H.250(B).

1.2 Project Overview

The City of Bellevue (City) is proposing to build a new multi-modal corridor between 116th Avenue NE and124th Avenue NE in the City of Bellevue (Figure 1). The proposed project is intended to bring the transportation infrastructure into better alignment with expected changes in land use that are planned to include more residential and commercial growth in the Bel-Red area. The NE Spring Boulevard Multi-Modal Corridor project will transform a roadway that now serves an area that is mainly light industrial to a mixed-use corridor that integrates multiple travel modes (walking, cycling and driving). New access options will be available to I-405, SR-520, downtown Bellevue, and the East Link light rail transit stations located at 120th Avenue NE and 130th Avenue NE. The project is divided into phases and will be implemented over time as funding becomes available.

1.3 Project Setting

The project area is located within the City of Bellevue, Washington (Section 28, Township 25 North, Range 5 East). The project corridor is located south of SR-520 and east of I-405. The project area has a mix of residential, commercial and light industrial zones. The project site is centered at latitude 47.623196 and longitude -122.18011. Surface elevations in the project area range from 150 feet to 194 feet above mean sea level.

This page intentionally left blank.

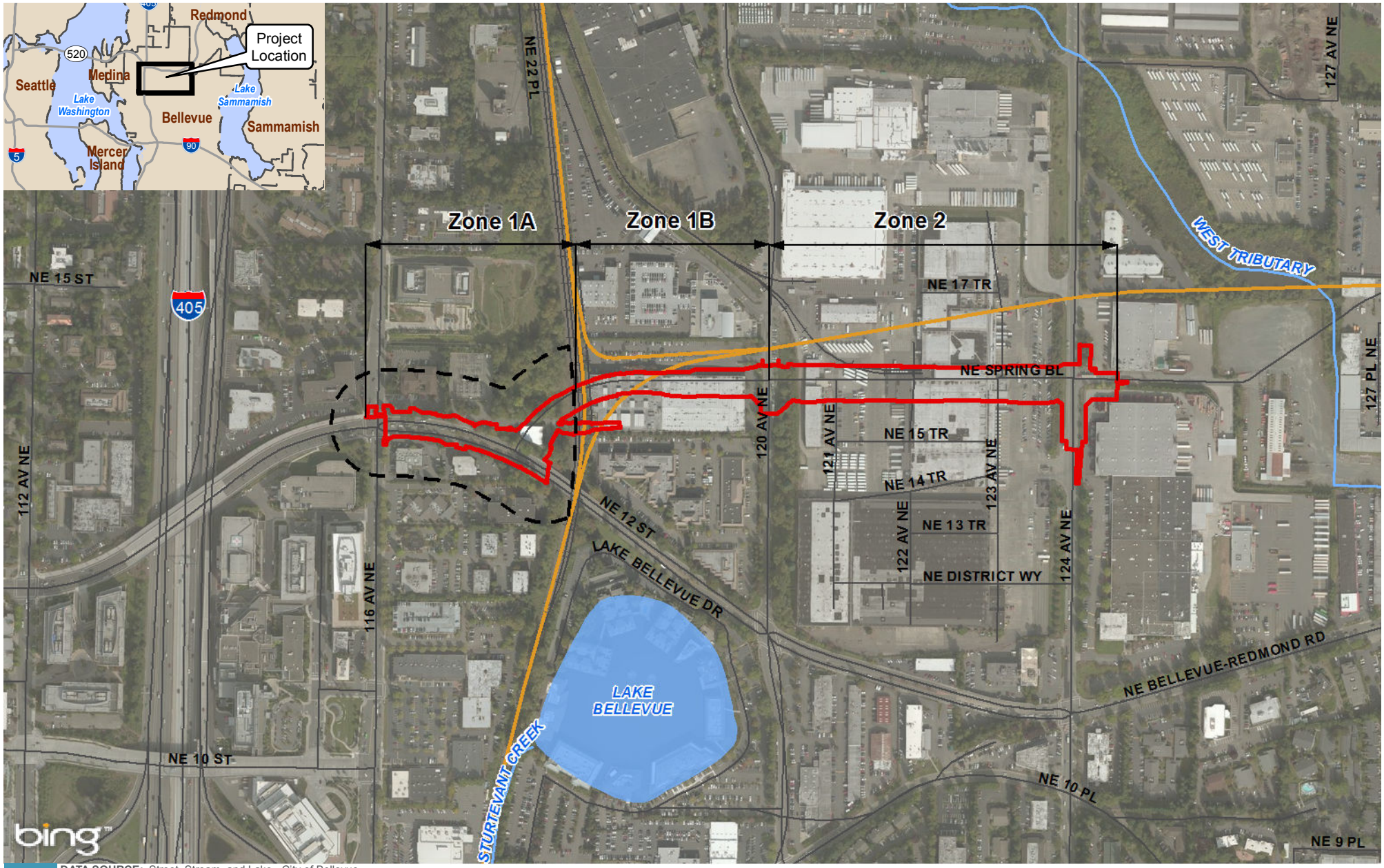

DATA SOURCE: Street, Stream, and Lake - City of Bellevue (2015), Aerial - ESRI Online (2015)

0 500 Feet

LEGEND

- Project Area
- 200-foot Study Area
- Waterbody
- Sound Transit East Link
- Street
- Railroad

FIGURE 1
PROJECT VICINITY

NE SPRING BOULEVARD MULTI-MODAL CORRIDOR

PATH: G:\PROJECTS\WASHINGTON\CITY_OF_BELLEVUE_007257\SPRING_BLVD_257582\MAP_DOCS\ENVIRONMENTAL\CAR\STUDYAREA.MXD - USER: MDALZELL - DATE: 12/1/2015

This page intentionally left blank.

2.0 Project Description

2.1 Background

The NE Spring Boulevard) Multi-Modal Corridor will create a new east-west roadway from 116th Avenue NE and 124th Avenue NE in the City of Bellevue. The proposed roadway cross section of NE Spring Boulevard from 116th Avenue and 120th Avenue NE will include two travel lanes in each direction with a separated multi-use path on the north side and sidewalk on the south side. Between 120th Avenue NE and 124th Avenue NE, the cross section will feature two travel lanes in each direction with widened outside lanes for shared bicycle use and a wide sidewalk on both sides. In addition, the new corridor will feature five new signalized intersections (NE 12th Street, 120th Ave NE, 121st Avenue NE, 123rd Avenue NE, and 124th Avenue NE) connected to the city's traffic adaptive control system, right turn pockets and center turn lanes where appropriate, urban landscaping, lighting, and stormwater treatment and drainage facilities consistent with the Bel-Red Corridor design standards. New utilities will be installed to accommodate stormwater, water, sewer, underground electricity, telephone, and natural gas. These new mainline services will require connection to the existing system on either end of the project. The NE Spring Boulevard Multi-Modal Corridor is one of several high-priority transportation improvements that resulted from the City of Bellevue's Bel-Red Corridor Plan to address residential and commercial growth anticipated in the Bel-Red area.

The proposed project is comprised of three zones and will be constructed as funding becomes available.

- Zone 1A begins at 116th Avenue NE and extends east to the Sound Transit East Link light rail corridor. Zone 1A includes work to widen NE 12th Street, construct a new intersection where NE Spring Boulevard begins at NE 12th Street, and the segment of NE Spring Boulevard, between NE 12th Street and the East Link light rail corridor. This zone will be built by a contractor selected by the City of Bellevue (City) and will take approximately 18 months to complete. Zone 1A will be the second phase of construction. A temporary gravel access road will be constructed as part of this project. The temporary access road will begin at the end of the driveway in the Delta property located off NE 12th Street and crosses and Sound Transit's track and extends east for approximately 130 feet. This access road will remain at the site for 18 months.
- Zone 1B begins where Zone 1A ends, and continues east across the East Link light rail corridor ending at 120th Avenue NE. Zone 1B includes two bridges placed directly over Sound Transit's track alignments with an infill zone placed between the bridge structures. The infill zone is located directly in the middle of the 'triangle' zone created by the Sound Transit track alignment. At each end there will be a fill approach section that ties the elevated structures back to the

intersection of NE 12th Street and 120th Avenue NE respectively. By utilizing an infill zone, the layout of utilities, conduits and other bridge supported items is simplified by eliminating any line distances through the corridor and no restriction from future use of the triangular area bounded by Sound Transit tracks. The utilities will be protected between the girders along the bridges and embedded in the infill zone between them.

Zone 1B will be constructed by Sound Transit in order to ensure compatibility between both the NE Spring Boulevard Multi-Modal Corridor and the East link light rail project's schedule. The project will be constructed over the span of approximately 18 months. This zone will be the first phase of construction.

- Zone 2 continues east where Zone 1B ends, from 120th Avenue NE, passing through the future Spring District development area, and ending at 124th Avenue NE. Zone 2 will be constructed after zones 1A and 1B. The contractor for this phase of construction is unknown and construction schedule is subject to change.

This project will require a sizeable amount of coordination with Sound Transit East Link Project, Spring District, the 120th Avenue NE corridor improvement project, and the future Teledesic site development to address concerns with storm water management, grade changes and retaining walls, roadway crossing and bridge structures, and utilities.

To convey vehicle, cyclist, and pedestrian traffic through this area, NE Spring Boulevard will intersect with NE 12th Street, then span over Sound Transit tracks, continue east through the Teledesic site (parcel 282505-9207), and eventually meet at the 124th Avenue NE intersection. Two bridges will be constructed as part of the project. One bridge will span the Sound Transit rail corridor where NE 12th Street ties into the new NE Spring Boulevard. The second bridge will span over Sound Transit's proposed rail corridor. The roadway cross section will accommodate a multi-purpose pathway and sidewalks for pedestrians and cyclists and two lanes of travel in each direction. Additional amenities such as landscaping and architectural features will also be incorporated.

3.0 Applicable Regulations

The City regulates activities in critical areas and their applicable buffers under LUC Section 20.25, otherwise known as the City's Critical Areas Ordinance (CAO) (City of Bellevue 2006). The City identifies the following critical areas: streams, wetlands, shorelines, geologic hazard areas, habitat associated with species of local importance and areas of special flood hazard. Wetlands are the only critical area that has been identified within the project area and therefore will be the only critical area discussed in this document.

Specific procedural (permit) requirements, as well as critical area classifications, required buffer widths, and mitigation requirements for the City will be discussed in further detail in the applicable sections that follow.

3.1 Uses and Development in Critical Areas

The proposed improvements to the NE Spring Boulevard are considered allowable development in critical areas in the City (LUC 20.25H.055), provided that mitigation measures are implemented properly.

3.2 Allowed Uses

The following sections identify the allowed uses in critical areas in the City (LUC 20.25H.055).

The uses and/or development described in subsection B of this section may be undertaken in a critical area or critical area buffer if all of the requirements of the referenced sections are met. A Critical Areas Land Use Permit shall be required unless otherwise noted.

A. Hierarchy of Alteration.

Where a use or development is proposed on a site with more than one type of critical area, preference shall be given to disturbing those critical areas with the least sensitivity to human disturbance, based on a consideration of both existing functions and values, and future functions and values if left undisturbed.

B. Uses and Development Allowed within Critical Areas.

The following chart lists uses and development that may be allowed in a critical area, critical area buffer, or critical area structure setback. The sections noted in the chart for each use or activity and critical area refer to the applicable performance standards that must be met.

Applicant's Response:

The proposed project is considered an expanded public rights-of-way and improvements are an allowed use under LUC 20.25H.055. A summary from the LUC is provided in the chart below.

Allowed Use or Development	**Wetlands**
New or expanded public rights-of-way, private roads, access easements and driveways	20.25H.055.C.2 20.25H.100

3.3 General Performance Standards

Below is a description of general performance standards required for expanded public rights-of-way.

Public Rights of Way

The LUC 20.25H. 055(C) notes:

2. New and Expanded Uses or Development. As used in this section, "facilities and systems" is a general term that encompasses all structures and improvements associated with the allowed uses and development described in the table in subsection B of this section:

a. New or expanded facilities and systems are allowed within the critical area or critical area buffer only where no technically feasible alternative with less impact on the critical area or critical area buffer exists. A determination of technically feasible alternatives will consider:

i. The location of existing infrastructure

Applicant Response:

Multiple design alternatives were analyzed with minimization of critical area impacts as part of the selection criteria. There is no technically feasible alternative available with less impact on the wetland buffer for the NE Spring Boulevard Multi-Modal Corridor project. However, the proposed project entirely avoids wetland impact.

ii. The function or objective of the proposed new or expanded facility or system

Applicant Response:

The proposed project will create a new multi-modal corridor with a new five-lane roadway with turn lanes, medians, illumination, traffic signals, cub/gutter, urban landscaping, sidewalks, and a multipurpose pathway. The purpose of the project is to address residential and commercial growth anticipated in the Bel-Red area.

iii. Demonstration that no alternative location or configuration outside of the critical area or critical area buffer achieves the stated function or objective, including construction of new or expanded facilities or systems outside of the critical area

Applicant's Response:

Although the project avoids all permanent and temporary wetland impacts, the project will affect wetland buffers. The proposed roadway is intended to accommodate the transformation of the Bel-Red area from a mainly light industrial area to a mixed-use corridor. The new roadway will also accommodate regional trail connections and the future East Link light rail line, along with two light rail stations at 120th Avenue NE and 130th

Avenue NE. This project was identified in the 2008 Bel-Red Subarea Plan to address planned residential and commercial growth anticipated in the area and to provide new east-west capacity for both vehicles and light rail. As a result, the location and configuration of the proposed roadway is somewhat fixed due to the location of the future Spring District and the East Link light rail.

iv. Whether the cost of avoiding disturbance is substantially disproportionate as compared to the environmental impact of proposed disturbance

Applicant's Response:

The site is constrained by buildings, Sound Transit's rail corridor, a PSE-owned substation, and other existing roadways. Shifting the proposed roadway to avoid the wetland buffer will be significantly more costly than avoiding the wetland buffer. Furthermore, there is a series of wetlands along the Sound Transit rail corridor, and shifting the road will still require wetland and buffer disturbance.

v. The ability of both permanent and temporary disturbance to be mitigated

Applicant's Response:

The project will avoid or minimize impacts to wetlands, streams, and buffers wherever feasible. However, total avoidance will not be possible due to the location of the project and the constraints associated with design guidelines. All unavoidable impacts to critical areas will be mitigated as required by City requirements (LUC 20.25H). The mitigation strategy will include on-site mitigation through enhancement activities. Specific mitigation measures are described in the Mitigation Section.

4.0 Study Methods

4.1 Study Area

The study area for this project is a corridor approximately 400 feet wide, centered on the proposed project alignment within Zone 1A (Figure 1). The City has already investigated Zone 1B and Zone 2 as part of the 120th Avenue NE Improvement Project and 124th Avenue NE Improvement Project as well as environmental documents developed from other projects in the project vicinity including the Sound Transit East Link Light rail project, the Spring District Development, and the Pine Forest Properties Transit Oriented Development. As a result, Zone 1B and Zone 2 are not included as part of the study area for this project.

4.2 Critical Areas Identification

Wetlands are the only areas that meet the City's definition of critical areas within the project area. Wetlands were identified through a two-step process. HDR biologists

first reviewed existing documents including soil surveys, aerial photographs, wetland and stream inventories, and other reports and documents that concern critical areas in the project area. After this review, HDR biologists conducted a field investigation on July 30 and August 5, 2015.

4.3 Review of Existing Information

Existing documents reviewed for this Critical Areas Study include the following:

- USDA NRCS Web Soil Survey (2015)
- City of Bellevue Comprehensive Plan (2010)
- City of Bellevue Critical Areas Maps (2009)
- Wetland, Stream, and Jurisdictional Ditch Delineation Report for Sound Transit East Link Extension Project: South Bellevue to Overlake (Anchor QEA 2014)
- U.S. Fish and Wildlife Service (USFWS) National Wetland Inventory Web site (2015)
- WDFW Priority Habitat and Species List (WDFW 2015)

These documents provided background information on the soils, land use, and critical areas in the project vicinity.

4.3.1 Wetlands

HDR Biologists field-verified wetland boundaries previously flagged and delineated by Anchor QEA (2014). In most areas, the actual plastic flagging was still present and observed in the field. HDR biologists then determined whether this boundary accurately reflected current field conditions, and if the previous work will satisfy current delineation requirements.

Formal data plots were collected in a previously identified wetland to reflect current field conditions, and photographs were taken in the wetland. HDR Biologists delineated wetlands using the three parameter methods described in the Corps of Engineers Wetland Delineation Manual (Environmental Laboratory 1987), as updated by the Regional Supplement to the Corps of Engineers Wetland Delineation Manual: Western Mountains, Valleys and Coast Region (USACE 2010). A detailed description of the field methods used in this study is provided in Appendix A.

Biologists marked data plot locations in the field with a Trimble GEO XT 6000 Series GPS device, which is capable of sub-meter accuracy. The resulting data were incorporated into project base maps.

Identified wetlands were rated using the state wetland rating system as described in *Washington State Wetland Rating System for Western Washington – Update* (Hruby 2014). Using this system, wetlands were rated in the field by using the Washington State Department of Ecology's (Ecology) Wetlands Rating Field Data Form provided with the rating system manual (Appendix D). Scores were calculated for each of the

three types of functions that wetlands provide: water quality treatment, hydrologic support, and wildlife habitat.

Wetlands were also rated according to the criteria identified in LUC 20.25H.095(B), which interprets the scores from the Wetlands Rating Field Data Form slightly differently. Table 2 lists the rating criteria for both Ecology and the City.

Table 1. Wetland Rating System for Washington State Department of Ecology and the City of Bellevue

Regulatory Agency	Category			
	I	II	III	IV
Washington State Department of Ecology[a]	Category I wetlands represent a unique or rare wetland type; or are more sensitive to disturbance than most wetlands; or are relatively undisturbed and contain ecological attributes that are impossible to replace within a human lifetime; or provide a high level of functions. Specific wetlands that meet the Category I criteria include: 1. Relatively undisturbed estuarine wetlands over one acre in size; 2. Wetlands of High Conservation Value (formerly call national Heritage Wetlands), specifically, Wetlands identified by the Washington Natural Heritage Program/DNR as important ecosystems for maintaining plant diversity in our state; 3. Bogs; 4. Mature and old-growth forested wetlands over one acre in size; 5. Wetlands in coastal lagoons; 6. Interdunal wetlands that score 8 or 9 points for habitat, and are larger than one acre in size; and 7. Wetlands scoring 23 points or more (out of 27) on the wetland rating form.	Category II wetlands are difficult, though not impossible, to replace, and provide high levels of some functions. Specific wetlands that meet the Category II criteria include: 8. Estuarine wetlands smaller than one acre in size, or disturbed estuarine wetlands larger than one acre; 9. Wetlands scoring between 20-22 points (out of 27) on the wetland rating form; and Interdunal wetlands larger than one acre that score 7 or lower for habitat, or those found in a mosaic of wetlands and dunes larger than 1 acre.	Category III wetlands provide a moderate level of functions and can often be adequately replaced with a well-planned mitigation project. Specific wetlands that meet the Category III criteria include: 1. Wetlands scoring between 16-19 points (out of 27) on the wetland rating form; 2. Wetlands that can be adequately replaced with a well-planned mitigation project; and 3. Interdunal wetlands between 0.1 acre and 1.0 acre in size.	Category IV wetlands have the lowest levels of functions and are often heavily disturbed. Specific wetlands that meet the Category IV criteria include: 1. Wetlands scoring less than 16 points (out of 27) on the wetland rating form.
City of Bellevue[b]	Category I wetlands: 1. Represent a unique or rare wetland type; or 2. Are more sensitive to disturbance than most wetlands; or 3. Are relatively undisturbed and contain ecological attributes that are impossible to replace within a human lifetime; or Provide a high level of functions.	Category II wetlands: 1. Wetlands scoring between 51-69 points (out of 100) on the questions related to the functions.	Category III wetlands: 1. Wetlands with a moderate level of functions (scores between 30 -50 points).	Category IV wetlands: 1. Wetlands larger than 2,500 square feet. Wetlands with a low level of functions (scores less than 30 points) and are often heavily disturbed.

[a] Hruby 2014
[b] Bellevue Land Use Code LUC 20.25H.095.B

In 2014, Ecology updated the Washington State Wetland Rating System that was originally published in 2004 and annotated in 2006. The updated rating system changed the scale of wetland function scores from 1-100 to 9-27. Table 2 shows how to convert old habitat function scores to the new 2014 rating system (Ecology 2014). Since habitat function scores are used by the City of Bellevue to determine wetland buffer widths, Tables 3 and 4 have been updated using the conversions shown in Table 2.

Table 2. Converting habitat function scores between Ecology's 2004 and 2014 rating systems

2004 Rating System	Final Habitat Score	2014 Rating System
29-35	High	8-9
20-28	Medium	5-7
<19	Low	3-4

Wetland buffer widths were assigned to wetlands within the study area according to the City of Bellevue LUC 20.25H.095(C) for Developed Sites, as listed below.

Table 3. Summary of Required Wetland Buffer Widths for the City of Bellevue

Category	Wetland Characteristic	Buffer
I	Natural heritage wetlands	190 feet
	Bogs	190 feet
	Forested	Based on score for habitat or water quality functions
	Habitat score of 29 to 36	225 feet
	Habitat score of 20 to 28	110 feet
	Water quality score of 24 to 32 and habitat score of less than 20	75 feet
	Not meeting any of the above	75 feet
II	Habitat score of 29 to 36	225 feet
	Habitat score of 20 to 28	110 feet
	Water quality score of 24 to 32 and habitat score of less than 20	75 feet
	Not meeting any of the above	75 feet
III	Habitat score of 20 to 28 points	110 feet
	Not meeting any of the above	60 feet
IV over 2,500 square feet	Score for functions less than 30 points	40 feet

5.0 Results– Wetlands

LUC 20.25H.095 defines wetlands as: "Those areas that are inundated or saturated by surface or ground water at a frequency and duration sufficient to support, and that under normal circumstances do support, a prevalence of vegetation adapted for life in saturated soil conditions. Wetlands generally include swamps, marshes, bogs, and similar areas. Wetlands do not include those artificial wetlands intentionally created from nonwetland sites, including, but not limited to, irrigation and drainage ditches, grass-lined swales, canals, detention facilities, wastewater treatment facilities, farm ponds, and landscape amenities, or those wetlands created after July 1, 1990, that were unintentionally created as a result of the construction of a road, street, or highway. Wetlands may include those artificial wetlands intentionally created from nonwetland areas to mitigate the conversion of wetlands.

5.1 Wetlands and Buffers in the Study Area

HDR biologists verified the extent and location of one previously-identified wetland (Figure 2). The wetland was distinguished from adjoining uplands by the presence of indicators for wetland hydrology, hydric soils, and hydrophytic vegetation. Wetland delineation data sheets are provided in Appendix C. Figure 2 shows the location of the wetland and data plots.

5.1.1 Wetland 1

Palustrine emergent
Category III
0.10 acre delineated/0.10 acre overall

Wetland 1 is a narrow wetland located adjacent to the Sound Transit corridor. Wetland 1 is a depressional wetland that likely flows into a vegetated gravel ditch located at the toe of slope of the railroad track and flows into another wetland located approximately 120 feet north of Wetland 1.

Vegetation

Wetland 1 is comprised of a palustrine emergent persistent habitat type (Cowardin et al. 1979). The dominant emergent vegetation present in Wetland 1 consists of reed canarygrass (*Phalaris arundinacea*, FACW), Kentucky bluegrass (*Poa pratensis*, FAC), and soft rush (*Juncus effusus*, FACW). Black cottonwood (*Populus balsamifera*) trees are also present at the northern edge of the wetland. The presence of these species meets the wetland vegetation criteria.

Soils

Soils in Wetland 1 consists of at least 6 inches of dark grayish brown (10YR 4/2) gravelly loamy sand or 6 inches of gray (5Y 5/1) gravelly silt loam with redoximorphic features. These soils meet the hydric indicators for a Depleted Matrix (F3).

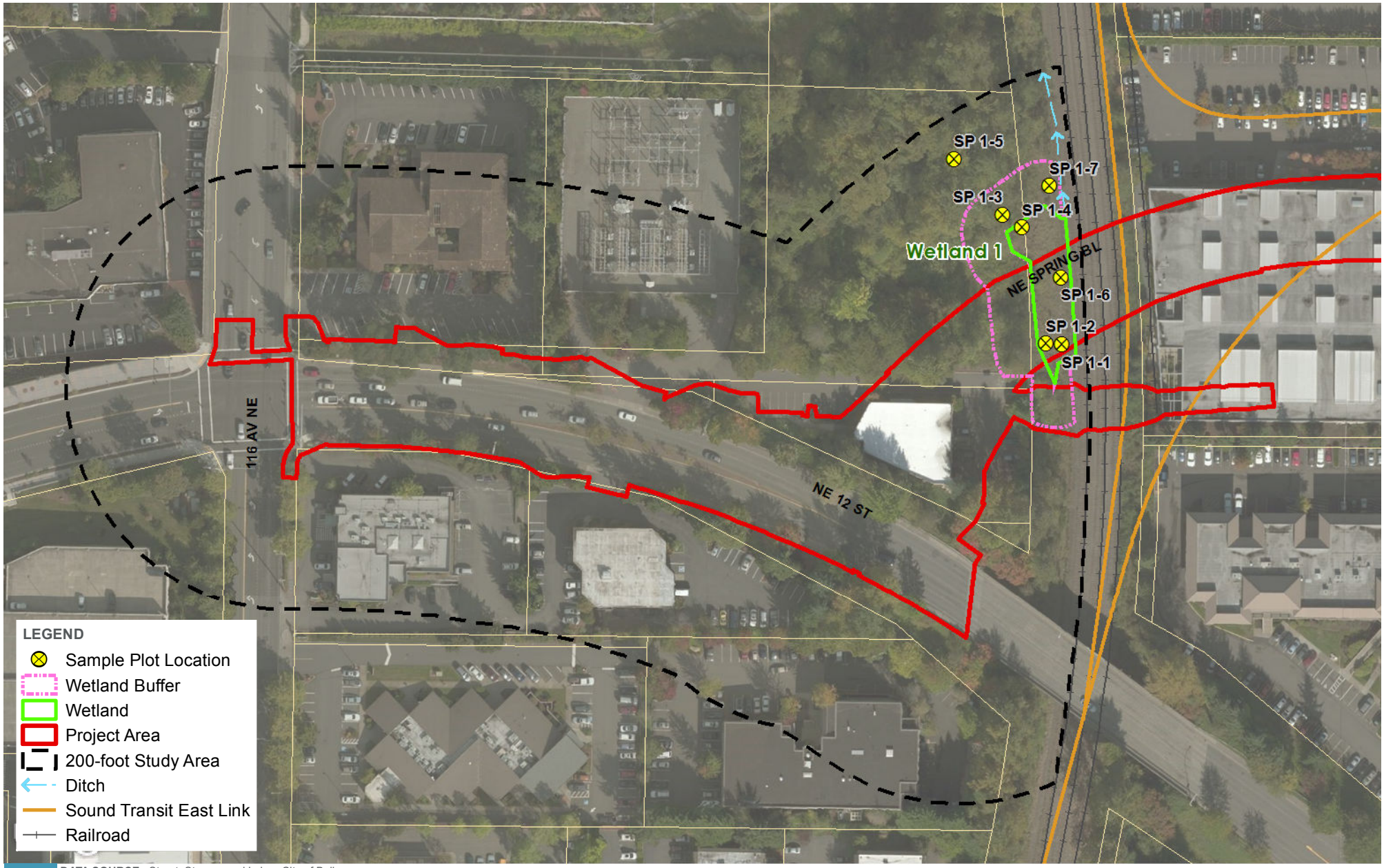

DATA SOURCE: Street, Stream, and Lake - City of Bellevue (2015), Aerial - ESRI Online (2015)

0 100 Feet

FIGURE 2
WETLAND WITHIN THE STUDY AREA

NE SPRING BOULEVARD MULTI-MODAL CORRIDOR

PATH: G:\PROJECTS\WASHINGTON\CITY_OF_BELLEVUE_007257\SPRING_BLVD_257582\MAP_DOCS\ENVIRONMENTAL\CAR\WETLAND.MXD - USER: MDALZELL - DATE: 12/1/2015

This page intentionally left blank.

Hydrology

No primary hydrology indicators were observed in the sample plots; however, Wetland 1 is located in a localized depression. Water-stained leaves were observed within the lowest part of the wetland. As a result, Wetland 1 meets Water-stained Leaves (B9) and Geomorphic Position (D2) hydrology indicators. According to the U.S. Drought Monitor by the National Drought Mitigation Center (2015), Washington State was experiencing a sever drought at the time of the delineation. As of July 24, more than 80 percent of Washington's rivers and streams are running at below normal or record low flows (Ecology 2015).

Rainfall recorded in the region was substantially below normal during all three months prior to the field investigation. Table 4 summarizes recorded precipitation and the normal range of precipitation for the three months preceding the site investigation. As such, primary hydrologic indicators are not present in any of the plots. However, the previous delineation completed in April 2013 observed surface saturation and a water table at 6 inches below the soil surface (Anchor QEA 2014). Given the depth of saturation noted during an average year and the presence of secondary indicators, it is assumed that wetland hydrology is present.

Table 4. Summary of Precipitation between May and July 2015 in Sea-Tac, WA

Category	May 2015	June 2015	July 2015
Recorded Precipitation (inches)[1]	0.58	0.23	0.09
Monthly Precipitation Average (inches)[2]	1.78	1.49	0.79
Normal Range (inches)[2]	1.12 - 2.14	0.93 - 1.80	0.41 - 0.97

1. Data from National Weather Service Climate Data: Seattle – Tacoma Airport Station (NOAA 2015)
2. Data from WETS Table (USDA NRCS 2015)

Wetland Rating

Wetland 1 is rated as Category IV in the Ecology rating system, with medium scores for water quality (5/9 points) and hydrologic (5/9 points) functions and a low score for habitat function (3/9 points). Wetland 1 has medium site potential to provide water quality functions due to a presence of persistent, ungrazed vegetation covering greater than 50 percent of the wetland and seasonal ponding for greater than 25 percent of the area. Wetland 1 also scores medium landscape potential for water quality as it is located in an urban area that will generate pollutants.

Wetland 1 has low site potential to provide flood protection because it has shallow marks of ponding and a larger area of the contributing basin. However, surrounding developments provide the high landscape potential for Wetland 1 to perform hydrologic function. Wetland 1 has low site potential for habitat functions due to the presence of minimal habitat diversity and interspersion, and also has low landscape potential due to high-intensity land use surrounding the wetland.

Wetland 1 has low values for water quality, hydrologic, and habitat functions because it is not recognized in watershed plans, regional flood control plans, or any other local plans. Wetland 1 is in the West Tributary sub-basin, which is not on the 303(d) list for degraded aquatic resources. Additionally, no federally- or state- protected species or associated habitats are present within 100 meters of the wetland. The City of Bellevue requires a 40-foot buffer for Category IV wetlands that are greater than 2,500 square feet.

Buffer Conditions

The vegetated buffer of Wetland 1 is absent on the east side as the wetland is bounded by the Sound Transit rail corridor to the east. Wetland buffer vegetation on the west and south sides mainly consists of Himalayan blackberry (*Rubus armeniacus*) with some red alder (*Alnus rubra*) saplings and Scot's broom (*Cytisus scoparius*). On the north side of Wetland 1, black cottonwood and red alder are present with an understory of Himalayan blackberry, English ivy (*Hedera helix*) and sword fern (*Polystichum munitum*).

5.2 Wetland Impacts

Construction of the proposed project will not result in direct effects to Wetland 1. There are no permanent or temporary wetland impacts anticipated to occur as a result of the project. Because the new bridge will be directly above Wetland 1, loss of function from shading is considered as well. According to the WSDOT Wetland Vegetation Response to Shade Special Study (2009), bridge heights over 24 feet have relatively minor impacts on vegetation in terms of total cover. The proposed bridge is approximately 35 feet, which is well above the bridge height with minimum vegetation impact. Based on the proposed bridge height, the project is expected to have no shading impact.

5.3 Wetland Buffer Impacts

Project construction is expected to have permanent and temporary impacts to vegetated buffers of Wetland 1. Permanent buffer impacts include clearing buffer vegetation and permanent filling of these areas from the construction of the new road. These activities will affect approximately 0.06 acre of wetland buffer (Figure 3). The affected buffer areas are primarily dominated by Himalayan blackberry.

Project construction would also result in temporary impacts to a portion of the vegetated buffer of Wetland 1 as a result of clearing and constructing the temporary access road during construction. These activities would affect approximately 0.05 acres of the Wetland 1 buffer. The temporary removal of vegetation in portions of the wetland buffer would cause a minor and temporary decrease in general habitat support. Revegetating the affected area with native woody vegetation will result in a long-term increase in plant species diversity and general habitat support to their adjoining wetlands.

5.4 Wetland Structure Setback

Structure setbacks associated with wetland buffers were assigned to wetlands in the project area according to LUC. 20.25.095(D)(2). No structure setback is required for Category IV wetlands.

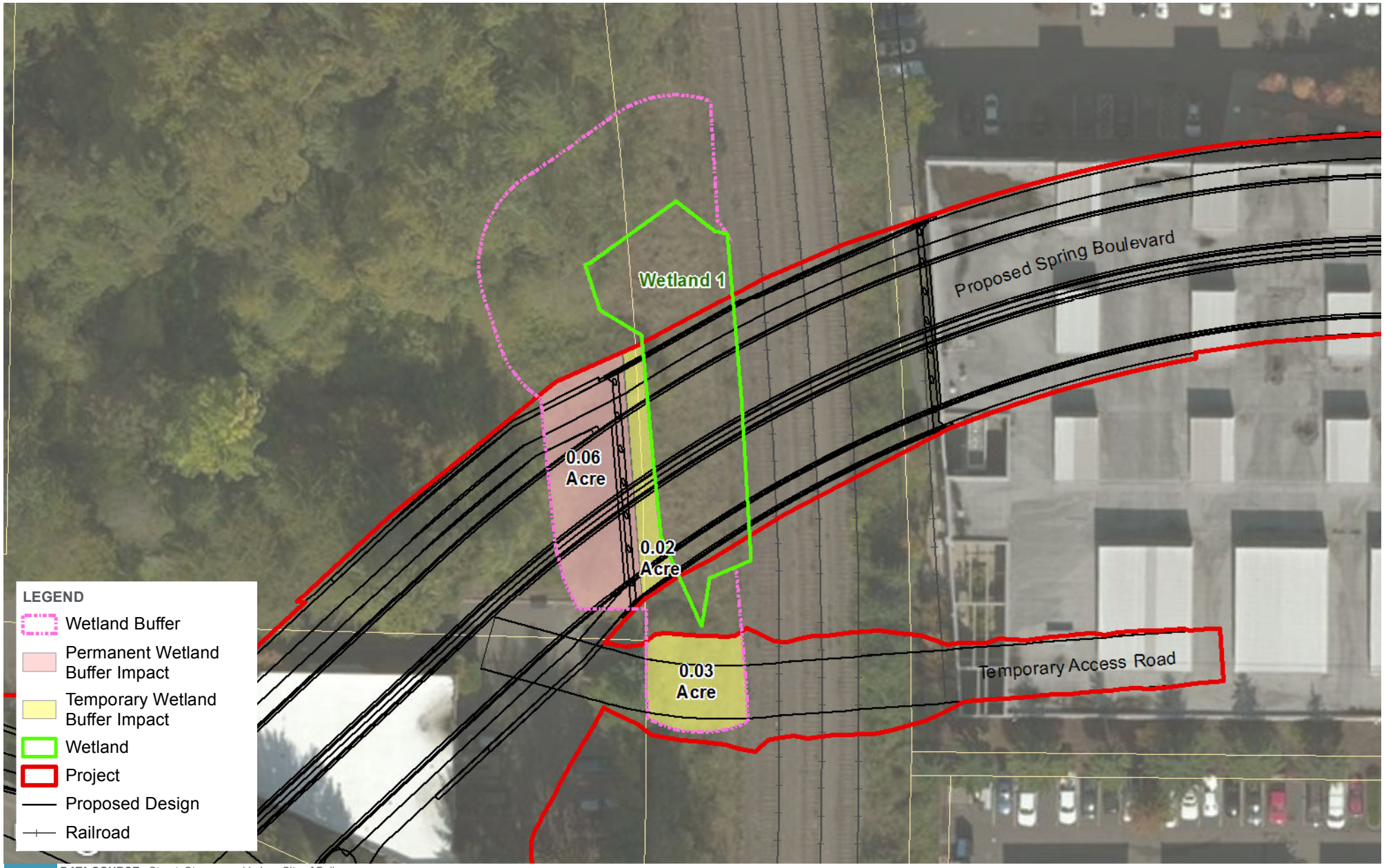

DATA SOURCE: Street, Stream, and Lake - City of Bellevue (2015), Aerial - ESRI Online (2015)

0 100 Feet

FIGURE 3
WETLAND BUFFER IMPACT AREA

NE SPRING BOULEVARD MULTI-MODAL CORRIDOR

PATH: G:\PROJECTS\WASHINGTON\CITY_OF_BELLEVUE_007257\SPRING_BLVD_257582\MAP_DOCS\ENVIRONMENTAL\CAR\IMPACT.MXD - USER: MDALZELL - DATE: 12/1/2015

This page intentionally left blank.

5.5 Wetland Performance Standards

The LUC 20.25H.100 notes:

Development on sites with a wetland or wetlands critical area buffer shall incorporate the following performance standards in design of the development, as applicable:

A. *Lights shall be directed away from the wetland*

Applicant's Response:

LED lighting will be used along the project corridor. The lighting has a narrower bandwidth and is expected to result in less disturbance to nearby wildlife. In addition, all lighting will be directed towards the roadway and pedestrian paths to limit light pollution in nearby critical areas.

B. *Activity that generates noise such as parking lots, generators, and residential uses, shall be located away from the wetland, or any noise shall be minimized through use of design and insulation techniques.*

Applicant's Response:

The proposed roadway near the wetland will be elevated to accommodate the future Sound Transit light rail tracks. As a result, the project will increase the distance between vehicles on the roadway and the wetland.

C. *Toxic runoff from new impervious area shall be routed away from wetlands.*

Applicant's Response:

The NE Spring Boulevard Multi-Modal Corridor project will result in an additional 1.1 acre of impervious surface. The permanent stormwater BMPs proposed for the project include: on-site stormwater management, flow control, and water quality treatment facilities. Stormwater runoff resulting from the existing and new impervious surface will be treated fully for quantity and quality using a combination of bioretention planter boxes, Filterra© Bioretention systems, and a modular detention/wetvault system throughout the project corridor.

D. *Treated water may be allowed to enter the wetland critical area buffer.*

Applicant's Response:

Existing site drainage will be improved through the addition of bioretention planter boxes, Filterra© Bioretention systems, and a modular detention/wetvault system. Runoff from a portion of NE 12th Street and the western end of NE Spring Boulevard will be treated through an oil-water separator and will eventually enter the vegetated gravel ditch

bordering the Sound Transit rail corridor. This ditch is located at the eastern boundary of Wetland 1.

E. *The outer edge of the wetland critical area buffer shall be planted with dense vegetation to limit pet or human use.*

Applicant's Response:

The proposed project will comply with the provisions in LUC 20.25H.100(E). The proposed project will include dense planting in the remaining buffers to reduce the potential for intrusion by people and pets.

F. *Use of pesticides, insecticides and fertilizers within 150 feet of the edge of the stream buffer shall be in accordance with the City of Bellevue's "Environmental Best Management Practices", now or as hereafter amended.*

Applicant's Response:

City staff will provide maintenance for NE Spring Boulevard, and it is assumed that any use of pesticide, insecticide, or fertilizers within 150 feet of the wetland will follow the City's environmental BMPs.

5.6 Wetlands Mitigation and Monitoring

LUC 20.25.105 identifies additional provisions for wetland mitigation plans beyond the criteria in LUC 20.25.210. All of these criteria have been consolidated into this section. This section describes the proposed mitigation for impacts to wetland buffer affected by the project. It outlines impact avoidance and minimization (including BMPs) and describes mitigation goals, objectives, and performance standards, as well as proposed monitoring and maintenance efforts at the mitigation site.

5.6.1 Mitigation Sequencing

The City of Bellevue requires that mitigation for impacts to wetland buffer follow this approved order (LUC 20.25H.210):

1. Avoiding the impact altogether by not taking a certain action or parts of an action
2. Minimizing the impacts by limiting the degree or magnitude of the action and its implementation with appropriate technology or by taking affirmative steps, such as project redesign, relocation or timing, to avoid or reduce the impacts
3. Rectifying the impact by repairing, rehabilitating or restoring the affected environment
4. Reducing or eliminating the impact over time by preservation and maintenance operations during the life of the action
5. Compensating for the impact by replacing, enhancing, or providing substitute resources or environments

6. Monitoring the hazard or other required mitigation and taking remedial action when necessary.

5.6.2 Avoidance and Minimization

The project has been designed to avoid or minimize impacts to critical areas and buffers wherever feasible. Project impacts to critical areas will be avoided or minimized using the following design and construction methods:

- Considerable efforts have been made for this project to limit disturbance to the wetland, and no wetland fill or temporary disturbance are proposed for this project.
- Clearing, land disturbance, and construction impacts will be confined to the minimum area necessary to complete the project.
- Develop and implement an Erosion and Sedimentation Control (ESC) Plan with measures to address erosion control during and after construction.
- Stabilize exposed soils with a vegetative cover or other erosion control treatment immediately following construction.
- Develop, implement, and maintain a Stormwater Pollution Prevention Plan (SWPPP) to minimize erosion of sediments due to rainfall runoff at construction site, and to reduce, eliminate, and prevent the pollution of stormwater.
- Develop, implement, and maintain a Spill Prevention Control and Countermeasures Plan (SPCC) to manage toxic materials associated with construction activities (e.g., equipment leakage, disposal of oily wastes, cleanup of any spills, storage of petroleum products/chemicals in contained areas away from streams and wetlands).
- Temporarily disturbed areas will be restored to pre-construction conditions to the extent possible.
- Equipment will be checked daily for leaks and will be well maintained to prevent lubricants and any other deleterious materials from entering wetlands. All equipment will be free of any external petroleum products, hydraulic fluid, and coolants.

5.6.3 Buffer Mitigation

Buffer mitigation will be provided for permanent and temporary wetland buffer impacts for this project. Enhancement will be at 1:1 ratio for impacts to the buffer of Category II, III, and IV wetlands (LUC 20.25H.105).

For 0.06 acre of unavoidable impacts to the wetland buffers within the project corridor, approximately 0.09 acre of degraded wetland buffer of Wetland 1 will be enhanced (Figure 4). HDR biologist met with Reilly Pittman and discussed with the proposed buffer mitigation on November 4, 2015. Based on the discussions, the proposed buffer mitigation area is located on north and side of the proposed bridge. Approximately 0.04 acre of the proposed buffer mitigation area (Planting Area A) will include removing invasive species such as Himalayan blackberry and re-vegetating with native woody vegetation. The remaining 0.05 acre of the proposed mitigation

site (Planting Area B) would include understory planting and removal of English ivy. The establishment of native woody vegetation in the degraded wetland buffer will increase buffer functions by slowing down water flow, limiting erosion, and provides vegetative screening and wildlife cover for Wetland 1. Table 5 presents proposed plant species to be established in the existing wetland buffer areas of Wetland 1. This planting palette will also be used in temporarily disturbed wetland buffer areas.

Table 5. Proposed Planting Palette for the Proposed Buffer Mitigation Area

Planting Area	Common Name	Latin Name	Percentage of Community Composition	Typical Plant Spacing (On Center)	Size
A	Indian Plum	*Oemleria cerasiformis*	10%	4′ OC	2 gallon
	Oceanspray	*Holodiscus discolor*	10%	4′ OC	2 gallon
	Black Twinberry	*Lonicera involucrata*	10%	4′ OC	2 gallon
	Mock Orange	*Philadelphus lewisii*	10%	4′ OC	2 gallon
	Red flowering currant	*Ribes sanguiniem*	15%	4′ OC	2 gallon
	Thimbleberry	*Rubus parviflorus*	10%	4′ OC	2 gallon
	Tall Oregon Grape	*Mahonia aquifolium*	10%	4′ OC	1 gallon
	Salal	*Gaultheria shallon*	10%	2′ OC	1 gallon
	Sword fern	*Polystichum munitum*	15%	2′ OC	1 gallon
B	Indian Plum	*Oemleria cerasiformis*	15%	4′ OC	2 gallon
	Black Twinberry	*Lonicera involucrata*	10%	4′ OC	2 gallon
	Thimbleberry	*Rubus parviflorus*	10%	4′ OC	2 gallon
	Salal	*Gaultheria shallon*	15%	2′ OC	1 gallon
	Sword fern	*Polystichum munitum*	20%	2′ OC	1 gallon
	Nootka rose	*Rosa nutkana*	15%	2′ OC	2 gallon
	Beaked hazelnut	*Corylus cornuta*	15%	4′ OC	2 gallon

DATA SOURCE: Street, Stream, and Lake - City of Bellevue (2015), Aerial - ESRI Online (2015)

0 100 Feet

FIGURE 4
PROPOSED BUFFER MITIGATION AT THE PROJECT SITE

NE SPRING BOULEVARD MULTI-MODAL CORRIDOR

PATH: G:\PROJECTS\WASHINGTON\CITY_OF_BELLEVUE_007257\SPRING_BLVD_257582\MAP_DOCS\ENVIRONMENTAL\CAR\BUFFERMITIGATION.MXD - USER: MDALZELL - DATE: 12/1/2015

This page intentionally left blank.

Mitigation Goals

The goal of the proposed buffer mitigation is to replace the functions that are provided by the wetland buffer through enhancement. Enhancement activities will consist of improving water quality, hydrologic, and habitat functions that were observed at the site by removing non-native species such as Himalayan blackberry, English ivy, and Scot's broom and planting with native woody species.

Mitigation Objectives

The objective of the proposed mitigation is to establish a diverse plant community in the proposed buffer mitigation area and improve system complexity by increasing the structural diversity of the native plant community. This objective will also help improve wildlife habitat in the wetland buffer.

Performance Standards

Performance standards are measurable, quantifiable indicators of mitigation performance relative to the mitigation objectives and goals. The following minimum performance standards are proposed for the buffer enhancement areas and apply to all the objectives listed above:

1. The project biologists shall supervise the installation of plantings and verify that plants have been installed in quantities and species specified in plans.
2. Monitor plants to ensure appropriate survival rates:
3. Areas shall meet the performance standards for plants as noted below:
    - Year 1: 100% survival of planted stock
    - Desirable native volunteers may be included in plant counts.
4. Buffer plantings shall demonstrate sufficient cover to provide wildlife habitat function: Areas shall meet the performance standards for shrub cover as noted below:
    - Year 1: 25 % cover
    - Year 2: 60% cover
    - Year 3: 70% cover
    - Year 5: 75% cover
    - Desirable native volunteers may be included in plant counts.

5.6.4 Monitoring Plan

The buffer mitigation area will be monitored to demonstrate compliance with applicable permit conditions and to evaluate the establishment and maintenance of the plant community within the planted area. The monitoring phase of the project is expected to consist of iterative and corrective measures, such as removing invasive species and is expected to occur up until a point when planted native species appear

to be established. This goal will be initiated by careful plant selection, established by monitoring for plant health and survival, and then ensured by documenting progress.

Monitoring will continue at the buffer mitigation area up to five years after construction or until the City of Bellevue concurs that the plants have established at the site. The mitigation goal will be considered achieved when the project team and the City of Bellevue agree that plants have become established and can be expected to survive and self-maintain the area. If the area becomes covered with native plants and there are no foreseeable issues from invasive plants and human disturbance, monitoring will become unnecessary.

The monitoring period will commence from the month that the installation is completed. Overview photos will be taken from the same vantage points each year to document overall appearance of the buffer mitigation area before, during, and after construction. Plant survivorship will be defined as fully healthy and thriving. Plants will be considered "dead" when more than 50% of the plant is decadent. Monitoring field visits will take place during the growing season of each monitoring year, and a monitoring report will be submitted to the City of Bellevue by the end of each calendar year.

5.6.5 Contingency Plan

The purpose of the contingency plan is to identify the need for maintenance or corrective action if the monitoring indicates that any of the performance standards are not met. These actions will be documented in the monitoring reports. Contingency measures are provided in Table 6.

Table 6. Contingency Measures

Problem	Contingency Measures
Site does not meet plant survivorship requirements	• Evaluate reasons for mortality (e.g., poor soil conditions, insufficient moisture, incorrect planting, browsing by wildlife, vandalism). • Address cause for mortality and replant to exceed survivorship requirements (contractor is responsible for replacing plant materials that die in the first year). • Provide protective measures (e.g., rodent fencing, deer repellent, weeding, etc.), if appropriate. • Initiate or modify irrigation practices, if necessary.

Over-competition by invasive species (more than 30% cover in the mitigation area)	• Evaluate predominant invasive species in the restoration areas. • Initiate invasive species control protocols appropriate to species type, conditions of infestation area (wetland or buffer), and level of infestation (e.g., herbicide application, mowing, etc.).

5.6.6 Additional Mitigation requirements for Wetlands

The LUC 20.25H.105 notes:

In addition to the provisions of LUC 20.25H.210, mitigation plans designed to mitigate impacts to wetlands and wetland critical area buffers shall meet the requirements of this section.

A. Preference of Mitigation Actions.

2. Mitigation for Impacted Wetland Critical Area Buffer. Mitigation actions that require compensation of impacted critical area buffer shall occur in the following order of preference and in the following locations:

a. On-site, through replacement of lost critical area buffer;

b. On-site, through enhancement of the functions and values of remaining critical area buffer;

c. Off-site, through replacement or enhancement, in the same sub-drainage basin;

d. Off-site, through replacement or enhancement, out of the sub-drainage basin but in the same drainage basin.

Applicant's Response:

Mitigation for impacts to wetland critical area buffers from the proposed project will be located on-site, through enhancement of Wetland 1 buffer.

B. Type and Location of Mitigation for Wetland Critical Area.

Compensatory mitigation for critical areas functions and values shall be either in-kind and on-site, or in-kind and within the same drainage sub-basin. Mitigation actions may be conducted off-site and outside of the drainage sub-basin when all of the following are demonstrated through a critical areas report:

1. There are no reasonable on-site or in-sub-drainage basin opportunities or on-site and in-sub-drainage basin opportunities do not have a high likelihood of success, after a determination of the natural capacity of the site to mitigate for the impacts.

Consideration should include: anticipated wetland mitigation replacement ratios, buffer conditions and proposed widths, hydrogeomorphic classes of on-site wetlands when restored, proposed flood storage capacity, and potential to mitigate stream fish and wildlife impacts (such as connectivity);

2. *Off-site mitigation has a greater likelihood of providing equal or improved wetland functions than the impacted wetland; and*

3. *Off-site locations shall be in the same sub-drainage basin unless established watershed goals for water quality, flood or conveyance, habitat, or other wetland functions have been established and strongly justify location of mitigation at another site.*

Applicant's Response:

Several options for wetland buffer mitigation were evaluated for the project. With this project, on-site wetland buffer mitigation is considered feasible on the north side of Wetland 1 and to provide similar types of buffer functions as those areas that will be affected. As a result, the mitigation proposed for impacts to wetland critical area buffers will be located on-site in Wetland 1.

C. Mitigation Ratios.

3. Critical Area Buffer Mitigation Ratio. Critical area buffer disturbed or impacted under this part shall be replaced at a ratio of one-to-one.

Applicant's Response:

Buffer mitigation for this project will be provided for 0.06 acre of unavoidable permanent wetland buffer impacts. Enhancement is required at a 1:1 ratio for impacts to the buffer of Category II, III, and IV wetlands (LUC 20.25H.105). Approximately 0.09 acres of degraded Wetland 1 buffer will be enhanced.

D. Wetlands Enhancement as Mitigation.

Impacts to wetland critical area functions may be mitigated by enhancement of existing significantly degraded wetlands. Applicants proposing to enhance wetlands must produce a critical areas report meeting the requirements of LUC 20.25H.110 and 20.25H.230 that identifies how enhancement will increase the functions of the degraded wetland and how this increase will adequately mitigate for the loss of wetland area and function at the impact site. An enhancement proposal must also show whether existing wetland functions will be reduced by the enhancement actions. (Ord. 5680, 6-26-06, § 3)

Applicant's Response:

The project is not proposing to mitigate by enhancing degraded wetlands for wetland buffer impacts.

20.25H.110 Critical areas report – Additional provisions.

A. Limitation on Modification.

A critical areas report may not be used to fill a wetland critical area, except where filling is required to allow a use set forth in LUC 20.25H.055.

Applicant's Response:

The project does not propose filling of wetlands.

B. Additional Content.

In addition to the general requirements of LUC 20.25H.230, a critical areas report for wetlands shall include a written assessment and accompanying maps of the wetlands and buffers within 300 feet of the project area, including the following information at a minimum:

1. A discussion of measures, including avoidance, minimization, and mitigation, proposed to preserve existing wetlands and restore any wetlands that were degraded prior to the current proposed land use activity.

2. A habitat and native vegetation conservation strategy that addresses methods to protect and enhance on-site habitat and wetland functions.

3. Functional evaluation for the wetland and adjacent buffer using a local or state agency staff-recognized method and including the reference of the method and all data sheets. (Ord. 5680, 6-26-06, § 3)

Applicant's Response:

The Critical Areas Report provides a discussion of all wetlands in the immediate vicinity of the site in the narrative discussion in Section 5.1. Information regarding avoidance and minimization and additional information on wetland enhancement are provided in Section 5.6. This section also provides a discussion of native vegetation enhancement on site.

5.6.7 Functional Lift Analysis

As described in the previous sections, the proposed project is expected to improve the overall functions the critical areas provide on-site by replanting the existing wetland buffer areas. Table 8 provides an analysis of the specific functions of the critical areas provided by the existing site and the post-project site.

Through the proposed wetland buffer mitigation activities, functional attributes that will be improved in the wetland buffers include reduced prevalence of invasive species, increased plant diversity by replanting with native species, increased food sources for wildlife, and increased vertical and horizontal habitat complexity.

Table 7. Functional Lift Resulting from the Proposed Project/Wetland Buffer Mitigation

Critical Area/Buffer Functions	Existing Conditions	Proposed Conditions	Change In Function
Wetland			
Water Quality	Wetland 1 provides has medium potential for water quality functions.	Treat all stormwater on-site along the new roadway.	On-site stormwater treatment will increase pathogen removal of stormwater from the new roadway that will eventually discharge into Wetland 1. Planting in the buffer area of Wetland 1 with native vegetation will also help filter and trap sediments.
Hydrologic	Wetland 1 has medium potential to reduce peak flows and retain water as it is located in an urban area.	Planting 0.09 acres of native woody vegetation in Wetland 1 buffer.	Replanting 0.09 acres of the wetland buffer has the potential to reduce velocity of peak stream flows.
Habitat	Existing vegetation in the wetland buffer areas lacks native vegetation necessary to provide forage and cover opportunities for wildlife. Although disturbed, these wetland buffer areas still provide some habitat for birds and small mammals. In urban setting, these vegetated buffer areas, especially with trees and tall shrubs, also provide screening for wildlife.	Invasive species such as Himalayan blackberry, English ivy, and Scot's broom will be removed within the wetland buffer. Approximately 0.09 acres of the wetland buffer area will be replanted, and invasive species will be replaced with native plant species.	Replanting 0.09 acres of the wetland buffer with native plant species will increase plant diversity and complexity of the buffer areas. New native plantings will provide foraging opportunities for birds and small mammals. Planting native shrubs along the new roadway will provide screening for wildlife.

6.0 References

Anchor QEA. 2014. Wetland, Stream, and Jurisdictional Ditch Delineation Report for Sound Transit East Link Extension Project: South Bellevue to Overlake. Prepared for H-J-H Final Design Partners and Sound Transit. August 2014.

City of Bellevue. 2006. Bellevue Land Use Code. Current through Ordinance 5680, passed June 26, 2006. Available from http://www.ci.bellevue.wa.us/Ordinances/Ord-5680.pdf

City of Bellevue. 2010. Comprehensive Plan. Originally adopted in 1993, updated in 2004. http://www.ci.bellevue.wa.us/comprehensive_plan.htm.

City of Bellevue. 2009. Critical Areas by Storm Drainage Basin Map: West Tributary. http://www.bellevue.gov/drainage-basins.htm. Accessed August 2015

Cowardin, L.M., V. Carter, F.C. Golet, and E.T. LaRoe. 1979. Classification of Wetlands and Deepwater Habitats of the United States. Government Printing Office, Washington, D.C.

Environmental Laboratory. 1987. Corps of Engineers Wetland Delineation Manual. Technical Report Y-87-1. Department of the Army, Waterways Experiment Station. Vicksburg, Mississippi.

Hitchcock, C.L. and A. Cronquist. 1973. Flora of the Pacific Northwest. University of Washington Press. Seattle, Washington.

Hruby, T. 2014. Washington State Wetland Rating System for Western Washington –Update. Washington State Department of Ecology Publication #14-06-19.

Munsell Color. 2009. Munsell® Soil Color Charts. Revised Edition. Munsell® Color, GretagMacBeth, New York.

National Drought Mitigation Center. 2015. U.S. Drought Monitor. http://droughtmonitor.unl.edu/ Accessed August 2015.

U.S. Army Corps of Engineers (USACE). 2010. Regional Supplement to the Corps of Engineers Wetland Delineation Manual: Western Mountains, Valleys and Coast Region. ERDC/EL TR- 10-3. May 2010. http://www.usace.army.mil/CECW/Documents/cecwo/reg/west_ mt_finalsupp.pdf.

U.S. Department of Agriculture, Natural Resources Conservation Service (USDA NRCS). 2010. Field Indicators of Hydric Soils in the United States, Version 7.0. G.W. Hurt and L.M. Vasilas (eds.). USDA, NRCS, in cooperation with the National Technical Committee for Hydric Soils.

U.S. Department of Agriculture, Natural Resources Conservation Service (USDA NRCS). 2013. The PLANTS Database (http://plants.usda.gov). National Plant Data Team, Greensboro, NC 27401-4901 USA. Accessed August 2015.

U.S. Department of Agriculture, Natural Resources Conservation Service (USDA NRCS). 2015. Web Soil Survey. http://websoilsurvey.sc.egov.usda.gov/App/WebSoil Survey.aspx. Accessed August 2015.

U.S. Fish and Wildlife Service (USFWS). 2015. National Wetland Inventory. Wetlands Online Mapper. http://www.fws.gov/wetlands/Data/Mapper.html. Accessed August 2015.

Washington State Department of Ecology (Ecology). 2015. Washington Drought 2015. http://www.ecy.wa.gov/drought/ Accessed August 4, 2015

Washington State Department of Ecology (Ecology). 1997. Washington State Wetlands Identification and Delineation Manual. Washington State Department of Ecology. Publication #96-94. http://www.ecy.wa.gov/pubs/9694.pdf

Washington State Department of Fish and Wildlife (WDFW). 2015. Priority Habitats and Species on the Web. http://wdfw.wa.gov/conservation/phs/. Accessed August 2015.

Washington State Department of Transportation (WSDOT) 2009. Wetland Vegetation Response to Shade Special Study Technical Memorandum. August 27, 2009.

Appendix A: Wetland Delineation Methodology

This page intentionally left blank.

Wetlands are defined as areas saturated or inundated by surface or groundwater at a frequency and duration sufficient to support, and which under normal circumstances do support, a prevalence of vegetation adapted for life in saturated soil conditions. The methods used to delineate the on-site wetlands conform to methods described in the *Corps of Engineers Wetland Delineation Manual* (Environmental Laboratory 1987), and *Regional Supplement to the Corps of Engineers Wetland Delineation Manual: Western Mountains, Valleys and Coast Region* (USACE 2010). All delineated wetlands were instrument-surveyed and mapped on project base maps.

To be considered a wetland, an area must have hydrophytic vegetation, hydric soils, and wetland hydrology. HDR staff collected data on these parameters in areas representative of typical site conditions. Staff collected additional data in associated uplands, as needed, to confirm wetland and stream boundaries.

Vegetation

The dominant plants and their wetland indicator status were evaluated to determine if the vegetation was hydrophytic. To determine which plants were dominate at a sample plot biologists applied the 50/20 rule per Corps recommendations. Under this guidance absolute cover estimates were made for each species found rooted within the sample plot, for each vegetative strata found in the habitat (tree, sapling/shrub, herb, and woody vine). The species that had the most cover was included along with the next species until the absolute cover of these totaled more than 50% of the total absolute cover. Any other species that represented at least 20% of the total absolute cover was also included as a dominant species for that vegetative stratum.

Sample plots varied in size depending on site topography and habitat complexity. The objective of establishing a plot was to depict particular plant associations that reflect specific water regimes or other ecological factors. So, on steep-sided riparian areas, a plot may consist of a narrow strip along the waters edge or within a floodplain a plot may be a standard 30-foot circle.

Hydrophytic vegetation is defined as vegetation adapted to wetland conditions. To meet the hydrophytic vegetation criterion, more than 50% of the dominant plants in each stratum must be Facultative, Facultative Wetland, or Obligate, based on the wetland indicator category assigned to each plant species by the Corps NWPL of the US Army Corps of Engineers, Cold Regions Research and Engineering Laboratory, Remote Sensing and Geographic Information System (http://www.crrel.usace.army.mil/). Table A-1 lists the definitions of the indicator categories.

Table A-1. Definitions of Wetland Plant Indicator Categories used to Determine the Presence of Hydrophytic Vegetation

Wetland Indicator Category	Symbol	Definition
Obligate Wetland Plants	OBL	Plants that almost always (> 99% of the time) occur in wetlands, but which may rarely (< 1% of the time) occur in non-wetlands.
Facultative Wetland Plants	FACW	Plants that often (67 to 99% of the time) occur in wetlands, but sometimes (1 to 33% of the time) occur in non-wetlands.
Facultative Plants	FAC	Plants with a similar likelihood (34 to 66% of the time) of occurring in both wetlands and non-wetlands.
Facultative Upland Plants	FACU	Plants that sometimes (1 to 33% of the time) occur in wetlands, but occur more often (67 to 99% of the time) in non-wetlands.
Upland Plants	UPL	Plants that rarely (< 1% of the time) occur in wetlands, and almost always (> 99% of the time) occur in non-wetlands.

Source: Lichvar et al. (2012).

HDR biologists identified plants to species in the field and estimated percent cover of dominant plants. Scientific and common plant names follow currently accepted nomenclature. Most names are consistent with *Flora of the Pacific Northwest* (Hitchcock and Cronquist 1973) and the PLANTS Database (USDA NRCS 2013). During the field investigation, staff observed and recorded the dominant plant species on data sheets for each data plot.

Soils

Generally, an area must contain hydric soils to be a wetland. Hydric soil forms when soils are saturated, flooded, or ponded long enough during the growing season to develop anaerobic conditions in the upper part (12 inches). Biological activities in saturated soil result in reduced oxygen concentrations and organisms turn to anaerobic processes for metabolism. Over time, anaerobic biological processes result in certain soil color patterns, which are used as indicators of hydric soil. Typically, low-chroma colors are formed in the soil matrix, and bright-colored redoximorphic features form within the matrix. Other important hydric soil indicators include organic matter accumulations in the surface horizon, reduced sulfur odors, and organic matter staining in the subsurface (USDA NRCS 2010).

HDR staff examined soils by excavating sample pits to a depth of 20 inches to observe soil profiles, colors, and textures. In some case, a shallower soil pit was adequate to document hydric soil indicators. Munsell color charts (Munsell Color 2009) were used to describe soil colors.

Hydrology

Project staff examined the area for evidence of hydrology. Wetland hydrology criteria were considered to be satisfied if it appeared that the soil was seasonally inundated or saturated to the surface for a consecutive number of days greater than or equal to 12.5% of the growing season. The growing season for the area was determined based on the period in which temperatures are above 28 degrees Fahrenheit 5 out of 10 years (Ecology 1997) using the long-term climatological data collected by the U.S. Department of Agriculture Natural Resource Conservation Service (USDA NRCS) (2015). Using the USDA NRCS WETS table for the nearest station (Seattle Tacoma, Washington), the growing season was approximated to be typically between February 6th to December 9, or a total of 305 days.

Wetland hydrology indicators are divided into two categories – primary and secondary indicators (USACE 2010). Primary indicators of hydrology include surface inundation, high water table, and saturated soils. The presence of one primary indicator is sufficient to conclude that wetland hydrology is present. If the absence of a primary indicator, observation of two or more secondary indicators is required to conclude that wetland hydrology is present. Secondary indicators of hydrology include drainage patterns, water-stained leaves, and geomorphic setting (USACE 2010).

This page intentionally left blank.

Appendix B: Wetland Data Sheets

This page intentionally left blank.

WETLAND DETERMINATION DATA FORM - Western Mountains, Valleys, and Coast Region

Project/Site: NE Spring Blvd | City/County: Bellevue | Sampling Date: 7/29/2015

Applicant/Owner: City of Bellevue | State: WA | Sampling Point: SP 1-1

Investigators: Maki Dalzell, Dangelei Fox | Section, Township, Range: S 28 T 25N R 5E

Landform (hillslope, terrace, etc.): Terrace | Local Relief (concave, convex, none): Convex | Slope(%): 0

Subregion (LRR): A | Lat: 47.6229508 | Long: -122.1827483 | Datum: NAD 83

Soil Map Unit Name: Alderwood gravelly sandy loam, 8-15% slopes | NWI Classification: PEM

Are climatic / hydrologic conditions on the site typical for this time of year? Yes ____ No X (If No, explain in Remarks)

Are Vegetation ____, Soil ____, Hydrology ____, significantly disturbed? Are "Normal Circumstances" present? Yes ____ No X

Are Vegetation ____, Soil ____, Hydrology ____, naturally problematic? (If needed, explain any answers in Remarks.)

SUMMARY OF FINDINGS - Attach a site map showing sampling point locations, transects, important features, etc.

Hydrophytic Vegetation Present?	Yes	X	No		
Hydric Soil Present?	Yes	X	No	**Is the Sampled Area within a Wetland?**	**Yes X No**
Wetland Hydrology Present?	Yes	X	No		

Remarks:
Nearly all Washington State is experiencing a severe drought and precipitation levels are below average for this area for May-July. All three wetland criteria are present, therefore the sample plot is located in a wetland.

VEGETATION – Use scientific names of plants.

	Absolute % Cover	Dominant Species	Indicator Status
Tree Stratum			
Shrub Stratum (Plot size: 30 Ft)			
Alnus rubra	3	Y	FAC
Cytisus scoparius	2	Y	
	5	=Total Cover	
Herb Stratum (Plot size: 6 Ft)			
Phalaris arundinacea	60	Y	FACW
Poa pratensis	30	Y	FAC
Juncus effusus	10	N	FACW
Leucanthemum vulgare	2	N	FACU
	102	=Total Cover	
Vine Stratum (Plot size: 30 Ft)			
Rubus armeniacus	2	Y	FACU
	2	=Total Cover	

% Bare Ground in Herb Stratum ____

Dominance Test Worksheet:

Number of Dominant Species That Are OBL, FACW, or FAC: 3 (A)

Total Number of Dominant Species Across all Strata: 4 (B)

Percent of Dominant Species That Are OBL, FACW, or FAC: 75.0% (A/B)

Prevalence Index Worksheet:

Total % Cover of:		Multiply by:	
OBL species	0	x 1 =	0
FACW species	70	x 2 =	140
FAC species	33	x 3 =	99
FACU species	4	x 4 =	16
UPL species	0	x 5 =	0
Column Totals:	107 (A)		255 (B)

Prevalence Index = B/A = 2.38

Hydrophytic Vegetation Indicators:

____ Rapid Test for Hydrophytic Vegetation

X Dominance Test > 50%

X Prevalence Index ≤ 3.0

____ Morphological Adaptations (Provide supporting data in Remarks or on a separate sheet)

____ Problematic Hydrophytic Vegetation (Explain)

Indicators of hydric soil and wetland hydrology must be present, unless disturbed or problematic.

Hydrophytic Vegetation Present? **Yes X No** ____

Remarks: (Include photo numbers here or on a separate sheet.)

Vegetation meets dominance test and prevalence index for hydrophytic vegetation.

SOIL

Sampling Point: SP 1-1

Profile Description: (Describe to the depth needed to document the indicator or confirm the absence of Indicators.)

Depth (inches)	Matrix Color (moist)	%	Redox Features Color (moist)	%	Type [1]	Loc [2]	Texture	Remarks
0 to 5	10YR 4 / 2	100	None				SANDY LOAM	
5 to 16	10YR 4 / 2	95	7.5YR4/4	5	C	M	Gravelly sandy loam	

[1]Type: C=Concentration, D=Depletion, RM=Reduced Martix, CS=Covered or Coated Sand Grains. [2]Location: PL=Pore Lining, M=Matrix.

Hydric Soil Indicators:

- ☐ Histosol (A1)
- ☐ Histic Epipedon (A2)
- ☐ Black Histic (A3)
- ☐ Hydrogen Sulfide (A4)
- ☐ Depleted Below Dark Surface (A11)
- ☐ Thick Dark Surface (A12)
- ☐ Sandy Mucky Mineral (S1)
- ☐ Sandy Gleyed Matrix (S4)
- ☐ Sandy Redox (S5)
- ☐ Stripped Matrix (S6)
- ☐ Loamy Mucky Mineral (F1) (except MLRA 1)
- ☐ Loamy Gleyed Matrix (F2)
- ☑ Depleted Matrix (F3)
- ☐ Redox Dark Surface (F6)
- ☐ Depleted Dark Surface (F7)
- ☐ Redox Depressions (F8)

Indicators for Problematic Hydric Soils: [3]

- ☐ 2 cm Muck (A10)
- ☐ Red Parent Material (TF2)
- ☐ Very Shallow Dark Surface (TF12)
- ☐ Other (Explain in Remarks)

[3] Indicators of hydrophytic vegetation and wetland hydrology must be present, unless disturbed or problematic.

☐ **Restrictive Layer (if observed):**

Type: Gravel

Depth (inches): 16"

Hydric Soil Present? Yes X No

Remarks:
Hydric soil indicators present in the sample plot include a Depleted Matrix (F3).

HYDROLOGY

Wetland Hydrology Indicators:

Primary Indicators (minimum of one is required; check all that apply)

- ☐ Surface Water (A1)
- ☐ High Water Table (A2)
- ☐ Saturation (A3)
- ☐ Water Marks (B1)
- ☐ Sediment Deposits (B2)
- ☐ Drift Deposits (B3)
- ☐ Algal Mat or Crust (B4)
- ☐ Iron Deposits (B5)
- ☐ Surface Soil Cracks (B6)
- ☐ Inundation Visible on Aerial Imagery (B7)
- ☐ Sparsely Vegetated Concave Surface (B8)
- ☐ Water-Stained Leaves (B9) (except MLRA 1, 2, 4A and 4B)
- ☐ Salt Crust (B11)
- ☐ Aquatic Invertebrates (B13)
- ☐ Hydrogen Sulfide Odor (C1)
- ☐ Oxidized Rhizospheres along Living Roots (C3)
- ☐ Presence of Reduced Iron (C4)
- ☐ Recent Iron Reduction in Tilled Soils (C6)
- ☐ Stunted or Stressed Plants (D1) (LRR A)
- ☐ Other (Explain in Remarks)

Secondary Indicators (minimum of two required)

- ☑ Water-Stained Leaves (B9) (MLRA 1, 2, 4A, and 4B)
- ☐ Drainage Patterns (B10)
- ☐ Dry-Season Water Table (C2)
- ☐ Saturation Visible on Aerial Imag.(C9)
- ☑ Geomorphic Position (D2)
- ☐ Shallow Aquitard (D3)
- ☐ FAC-Neutral Test (D5)
- ☐ Paised Ant Mounds (D6) (LRR A)
- ☐ Frost-Heave Hummocks (D7)

Field Observations:

Surface Water Present?	Yes		No	X	Depth (inches):
Water Table Present?	Yes		No	X	Depth (inches):
Saturation Present? (includes capillary fringe)	Yes		No	X	Depth (inches):

Wetland Hydrology Present? Yes X No

Describe Recorded Data (stream gauge, monitoring well, aerial photos, previous inspections), if available:

Remarks:
No primary hydrology indicators were present during the site visit due to severe drought conditions in the region. However, previous wetland delineations conducted in 2013 noted surface saturation and a water table at 6". Based on presence of hydrophytic vegetation, hydric soil and previoulsy documented hydrology and the presence of 2 secodary indicator wetland hydrology is present in the sample plot.

WETLAND DETERMINATION DATA FORM - Western Mountains, Valleys, and Coast Region

Project/Site: NE Spring Blvd | City/County: Bellevue | Sampling Date: 7/29/2015

Applicant/Owner: City of Bellevue | State: WA | Sampling Point: SP 1-2

Investigators: Maki Dalzell, Dangelei Fox | Section, Township, Range: S 28 T 25N R 5E

Landform (hillslope, terrace, etc.): Hillslope | Local Relief (concave, convex, none): Concave | Slope(%): 0

Subregion (LRR): A | Lat: 47.62295303 | Long: -122.1828053 | Datum: NAD 83

Soil Map Unit Name: Alderwood gravelly sandy loam, 8-15% slopes | NWI Classification: PEM

Are climatic / hydrologic conditions on the site typical for this time of year? Yes ____ No X (If No, explain in Remarks)

Are Vegetation ____, Soil ____, Hydrology ____, significantly disturbed? Are "Normal Circumstances" present? Yes ____ No X

Are Vegetation ____, Soil ____, Hydrology ____, naturally problematic? (If needed, explain any answers in Remarks.)

SUMMARY OF FINDINGS - Attach a site map showing sampling point locations, transects, important features, etc.

Hydrophytic Vegetation Present?	Yes	X	No		
Hydric Soil Present?	Yes	X	No	**Is the Sampled Area within a Wetland?**	**Yes X No**
Wetland Hydrology Present?	Yes	X	No		

Remarks:
Nearly all Washington State is experiencing a severe drought and precipitation levels are below average for this area for May-July. All 3 wetland criteria are present in the sample plot.

VEGETATION – Use scientific names of plants.

	Absolute % Cover	Dominant Species	Indicator Status
Tree Stratum			
Shrub Stratum			
Herb Stratum (Plot size: 6 Ft)			
Phalaris arundinacea	50	Y	FACW
	50	=Total Cover	
Vine Stratum			

% Bare Ground in Herb Stratum 50

Dominance Test Worksheet:

Number of Dominant Species That Are OBL, FACW, or FAC: 1 (A)

Total Number of Dominant Species Across all Strata: 1 (B)

Percent of Dominant Species That Are OBL, FACW, or FAC: 100.0% (A/B)

Prevalence Index Worksheet:

Total % Cover of:		Multiply by:	
OBL species	0	x 1 =	0
FACW species	50	x 2 =	100
FAC species	0	x 3 =	0
FACU species	0	x 4 =	0
UPL species	0	x 5 =	0
Column Totals:	50 (A)		100 (B)

Prevalence Index = B/A= 2.00

Hydrophytic Vegetation Indicators:

____ Rapid Test for Hydrophytic Vegetation

X Dominance Test > 50%

X Prevalence Index ≤ 3.0

____ Morphological Adaptations (Provide supporting data in Remarks or on a separate sheet)

____ Problematic Hydrophytic Vegetation (Explain)

Indicators of hydric soil and wetland hydrology must be present, unless disturbed or problematic.

Hydrophytic Vegetation Present? **Yes X No**

Remarks: (Include photo numbers here or on a separate sheet.)

Vegetation meets dominance test and prevalence index for hydrophytic vegetation. Water stained leaves and dead moss visible in 50% bare ground.

SOIL

Sampling Point: SP 1-2

Profile Description: (Describe to the depth needed to document the indicator or confirm the absence of Indicators.)

Depth (inches)	Matrix Color (moist)	%	Redox Features Color (moist)	%	Type [1]	Loc [2]	Texture	Remarks
0 to 8	10YR 4 / 3	97	7.5YR4/4	3	C	M	Gravely loamy sand	
8 to 14	10YR 4 / 2	98	7.5YR4/6	2	C	M	Gravely sandy loam	Shovel refusal at 14"

[1]Type: C=Concentration, D=Depletion, RM=Reduced Martix, CS=Covered or Coated Sand Grains. [2]Location: PL=Pore Lining, M=Matrix.

Hydric Soil Indicators:

- ☐ Histosol (A1)
- ☐ Histic Epipedon (A2)
- ☐ Black Histic (A3)
- ☐ Hydrogen Sulfide (A4)
- ☐ Depleted Below Dark Surface (A11)
- ☐ Thick Dark Surface (A12)
- ☐ Sandy Mucky Mineral (S1)
- ☐ Sandy Gleyed Matrix (S4)
- ☐ Sandy Redox (S5)
- ☐ Stripped Matrix (S6)
- ☐ Loamy Mucky Mineral (F1) (except MLRA 1)
- ☐ Loamy Gleyed Matrix (F2)
- ☑ Depleted Matrix (F3)
- ☐ Redox Dark Surface (F6)
- ☐ Depleted Dark Surface (F7)
- ☐ Redox Depressions (F8)

Indicators for Problematic Hydric Soils: [3]

- ☐ 2 cm Muck (A10)
- ☐ Red Parent Material (TF2)
- ☐ Very Shallow Dark Surface (TF12)
- ☐ Other (Explain in Remarks)

[3] Indicators of hydrophytic vegetation and wetland hydrology must be present, unless disturbed or problematic.

☐ **Restrictive Layer (if observed):**

Type: _____

Depth (inches): _____

Hydric Soil Present? Yes X No _____

Remarks:
Hydric soil indicators present in the sample plot include a Depleted Matrix (F3).

HYDROLOGY

Wetland Hydrology Indicators:

Primary Indicators (minimum of one is required; check all that apply)

- ☐ Surface Water (A1)
- ☐ High Water Table (A2)
- ☐ Saturation (A3)
- ☐ Water Marks (B1)
- ☐ Sediment Deposits (B2)
- ☐ Drift Deposits (B3)
- ☐ Algal Mat or Crust (B4)
- ☐ Iron Deposits (B5)
- ☐ Surface Soil Cracks (B6)
- ☐ Inundation Visible on Aerial Imagery (B7)
- ☐ Sparsely Vegetated Concave Surface (B8)
- ☐ Water-Stained Leaves (B9) (except MLRA 1, 2, 4A and 4B)
- ☐ Salt Crust (B11)
- ☐ Aquatic Invertebrates (B13)
- ☐ Hydrogen Sulfide Odor (C1)
- ☐ Oxidized Rhizospheres along Living Roots (C3)
- ☐ Presence of Reduced Iron (C4)
- ☐ Recent Iron Reduction in Tilled Soils (C6)
- ☐ Stunted or Stressed Plants (D1) (LRR A)
- ☐ Other (Explain in Remarks)

Secondary Indicators (minimum of two required)

- ☑ Water-Stained Leaves (B9) (MLRA 1, 2, 4A, and 4B)
- ☐ Drainage Patterns (B10)
- ☐ Dry-Season Water Table (C2)
- ☐ Saturation Visible on Aerial Imag.(C9)
- ☑ Geomorphic Position (D2)
- ☐ Shallow Aquitard (D3)
- ☑ FAC-Neutral Test (D5)
- ☐ Paised Ant Mounds (D6) (LRR A)
- ☐ Frost-Heave Hummocks (D7)

Field Observations:

Surface Water Present?	Yes _____	No X	Depth (inches):	_____	
Water Table Present?	Yes _____	No X	Depth (inches):	_____	
Saturation Present? (includes capillary fringe)	Yes _____	No X	Depth (inches):	_____	

Wetland Hydrology Present? Yes X No _____

Describe Recorded Data (stream gauge, monitoring well, aerial photos, previous inspections), if available:

Remarks:
No primary hydrology indicators were present during the site visit due to severe drought conditions in the region. However, previous wetland delineations conducted in 2013 noted surface saturation and a water table at 6". Based on presence of hydrophytic vegetation, hydric soil and previoulsy documented hydrology and the presence of 3 secodary indicato wetland hydrology is present in the sample plot.

WETLAND DETERMINATION DATA FORM - Western Mountains, Valleys, and Coast Region

Project/Site: NE Spring Blvd | City/County: Bellevue | Sampling Date: 7/29/2015

Applicant/Owner: City of Bellevue | State: WA | Sampling Point: SP 1-3

Investigators: Maki Dalzell, Dangelei Fox | Section, Township, Range: S 28 T 25N R 5E

Landform (hillslope, terrace, etc.): Terrace | Local Relief (concave, convex, none): Concave | Slope(%):

Subregion (LRR): A | Lat: 47.62327111 | Long: -122.1829715 | Datum: NAD 83

Soil Map Unit Name: Alderwood gravelly sandy loam, 8-15% slopes | NWI Classification: None

Are climatic / hydrologic conditions on the site typical for this time of year? Yes ____ No X (If No, explain in Remarks)

Are Vegetation ____, Soil ____, Hydrology ____, significantly disturbed? Are "Normal Circumstances" present? Yes ____ No X

Are Vegetation ____, Soil ____, Hydrology ____, naturally problematic? (If needed, explain any answers in Remarks.)

SUMMARY OF FINDINGS - Attach a site map showing sampling point locations, transects, important features, etc.

Hydrophytic Vegetation Present?	Yes	____	No	X	
Hydric Soil Present?	Yes	____	No	X	**Is the Sampled Area within a Wetland?** **Yes** ____ **No** X
Wetland Hydrology Present?	Yes	____	No	X	

Remarks:
The sample plot is not located in a wetland, no wetland criteria are present.

VEGETATION – Use scientific names of plants.

	Absolute % Cover	Dominant Species	Indicator Status
Tree Stratum (Plot size: 30 Ft)			
Populus balsamifera	80	Y	FAC
	80	=Total Cover	
Shrub Stratum			
Herb Stratum (Plot size: 6 Ft)			
Polystichum munitum	10	Y	FACU
Phalaris arundinacea	5	Y	FACW
	15	=Total Cover	
Vine Stratum (Plot size: 30 Ft)			
Rubus armeniacus	85	Y	FACU
	85	=Total Cover	

% Bare Ground in Herb Stratum ____

Dominance Test Worksheet:

Number of Dominant Species That Are OBL, FACW, or FAC: 2 (A)

Total Number of Dominant Species Across all Strata: 4 (B)

Percent of Dominant Species That Are OBL, FACW, or FAC: 50.0% (A/B)

Prevalence Index Worksheet:

Total % Cover of:		Multiply by:	
OBL species	0	x 1 =	0
FACW species	5	x 2 =	10
FAC species	80	x 3 =	240
FACU species	95	x 4 =	380
UPL species	0	x 5 =	0
Column Totals:	180 (A)		630 (B)

Prevalence Index = B/A= 3.50

Hydrophytic Vegetation Indicators:

____ Rapid Test for Hydrophytic Vegetation

____ Dominance Test > 50%

____ Prevalence Index ≤ 3.0

____ Morphological Adaptations (Provide supporting data in Remarks or on a separate sheet)

____ Problematic Hydrophytic Vegetation (Explain)

Indicators of hydric soil and wetland hydrology must be present, unless disturbed or problematic.

Hydrophytic Vegetation Present? **Yes** ____ **No** X

Remarks: (Include photo numbers here or on a separate sheet.)

No hydrophytic vegetation is present in the sample plot.

SOIL

Sampling Point: SP 1-3

Profile Description: (Describe to the depth needed to document the indicator or confirm the absence of Indicators.)

Depth (inches)	Matrix Color (moist)	Matrix %	Redox Features Color (moist)	Redox Features %	Type [1]	Loc [2]	Texture	Remarks
0 to 16	10YR 4 / 3	100	None				Gravelly sandy loam	Shovel refusal at 16"

[1]Type: C=Concentration, D=Depletion, RM=Reduced Martix, CS=Covered or Coated Sand Grains. [2]Location: PL=Pore Lining, M=Matrix.

Hydric Soil Indicators:

- ☐ Histosol (A1)
- ☐ Histic Epipedon (A2)
- ☐ Black Histic (A3)
- ☐ Hydrogen Sulfide (A4)
- ☐ Depleted Below Dark Surface (A11)
- ☐ Thick Dark Surface (A12)
- ☐ Sandy Mucky Mineral (S1)
- ☐ Sandy Gleyed Matrix (S4)
- ☐ Sandy Redox (S5)
- ☐ Stripped Matrix (S6)
- ☐ Loamy Mucky Mineral (F1) (except MLRA 1)
- ☐ Loamy Gleyed Matrix (F2)
- ☐ Depleted Matrix (F3)
- ☐ Redox Dark Surface (F6)
- ☐ Depleted Dark Surface (F7)
- ☐ Redox Depressions (F8)

Indicators for Problematic Hydric Soils: [3]

- ☐ 2 cm Muck (A10)
- ☐ Red Parent Material (TF2)
- ☐ Very Shallow Dark Surface (TF12)
- ☐ Other (Explain in Remarks)

[3] Indicators of hydrophytic vegetation and wetland hydrology must be present, unless disturbed or problematic.

☑ **Restrictive Layer (if observed):**

Type: gravel

Depth (inches): 16"

Hydric Soil Present? Yes ____ No X

Remarks:
No hydric soils are present in the sample plot.

HYDROLOGY

Wetland Hydrology Indicators:

Primary Indicators (minimum of one is required; check all that apply)

- ☐ Surface Water (A1)
- ☐ High Water Table (A2)
- ☐ Saturation (A3)
- ☐ Water Marks (B1)
- ☐ Sediment Deposits (B2)
- ☐ Drift Deposits (B3)
- ☐ Algal Mat or Crust (B4)
- ☐ Iron Deposits (B5)
- ☐ Surface Soil Cracks (B6)
- ☐ Inundation Visible on Aerial Imagery (B7)
- ☐ Sparsely Vegetated Concave Surface (B8)
- ☐ Water-Stained Leaves (B9) (except MLRA 1, 2, 4A and 4B)
- ☐ Salt Crust (B11)
- ☐ Aquatic Invertebrates (B13)
- ☐ Hydrogen Sulfide Odor (C1)
- ☐ Oxidized Rhizospheres along Living Roots (C3)
- ☐ Presence of Reduced Iron (C4)
- ☐ Recent Iron Reduction in Tilled Soils (C6)
- ☐ Stunted or Stressed Plants (D1) (LRR A)
- ☐ Other (Explain in Remarks)

Secondary Indicators (minimum of two required)

- ☐ Water-Stained Leaves (B9) (MLRA 1, 2, 4A, and 4B)
- ☐ Drainage Patterns (B10)
- ☐ Dry-Season Water Table (C2)
- ☐ Saturation Visible on Aerial Imag.(C9)
- ☐ Geomorphic Position (D2)
- ☐ Shallow Aquitard (D3)
- ☐ FAC-Neutral Test (D5)
- ☐ Paised Ant Mounds (D6) (LRR A)
- ☐ Frost-Heave Hummocks (D7)

Field Observations:

Surface Water Present?	Yes ____	No X	Depth (inches):		
Water Table Present?	Yes ____	No X	Depth (inches):		
Saturation Present? (includes capillary fringe)	Yes ____	No X	Depth (inches):		

Wetland Hydrology Present? Yes ____ No X

Describe Recorded Data (stream gauge, monitoring well, aerial photos, previous inspections), if available:

Remarks:
No primary or secondary hydrology indicators are present in the sample plot.

WETLAND DETERMINATION DATA FORM - Western Mountains, Valleys, and Coast Region

Project/Site: NE Spring Blvd | City/County: Bellevue | Sampling Date: 7/29/2015

Applicant/Owner: City of Bellevue | State: WA | Sampling Point: SP 1-4

Investigators: Maki Dalzell, Dangelei Fox | Section, Township, Range: S 28 T 25N R 5E

Landform (hillslope, terrace, etc.): Terrace | Local Relief (concave, convex, none): Concave | Slope(%): 0

Subregion (LRR): A | Lat: 47.62324091 | Long: -122.1829003 | Datum: NAD 83

Soil Map Unit Name: alderwood gravelly sandy loam, 8-15% slopes | NWI Classification: PFO

Are climatic / hydrologic conditions on the site typical for this time of year? Yes ____ No X (If No, explain in Remarks)

Are Vegetation ____, Soil ____, Hydrology ____, significantly disturbed? Are "Normal Circumstances" present? Yes ____ No X

Are Vegetation ____, Soil ____, Hydrology ____, naturally problematic? (If needed, explain any answers in Remarks.)

SUMMARY OF FINDINGS - Attach a site map showing sampling point locations, transects, important features, etc.

Hydrophytic Vegetation Present?	Yes	X	No		
Hydric Soil Present?	Yes	X	No	**Is the Sampled Area within a Wetland?**	**Yes X No**
Wetland Hydrology Present?	Yes	X	No		

Remarks:
Nearly all Washington State is experiencing a severe drought and precipitation levels are below average for this area for May-July. All three wetland criteria are present, therefore the sample plot is located in a wetland.

VEGETATION – Use scientific names of plants.

	Absolute % Cover	Dominant Species	Indicator Status
Tree Stratum (Plot size: 30 Ft)			
Populus balsamifera	50	Y	FAC
	50	=Total Cover	
Shrub Stratum			
Herb Stratum (Plot size: 6 Ft)			
Juncus effusus	25	Y	FACW
Phalaris arundinacea	15	Y	FACW
	40	=Total Cover	
Vine Stratum (Plot size: 30 Ft)			
Rubus armeniacus	10	Y	FACU
	10	=Total Cover	

% Bare Ground in Herb Stratum 15

Dominance Test Worksheet:

Number of Dominant Species That Are OBL, FACW, or FAC: 3 (A)

Total Number of Dominant Species Across all Strata: 4 (B)

Percent of Dominant Species That Are OBL, FACW, or FAC: 75.0% (A/B)

Prevalence Index Worksheet:

Total % Cover of:		Multiply by:	
OBL species	0	x 1 =	0
FACW species	40	x 2 =	80
FAC species	50	x 3 =	150
FACU species	10	x 4 =	40
UPL species	0	x 5 =	0
Column Totals:	100 (A)		270 (B)

Prevalence Index = B/A = 2.70

Hydrophytic Vegetation Indicators:

____ Rapid Test for Hydrophytic Vegetation

X Dominance Test > 50%

X Prevalence Index ≤ 3.0

____ Morphological Adaptations (Provide supporting data in Remarks or on a separate sheet)

____ Problematic Hydrophytic Vegetation (Explain)

Indicators of hydric soil and wetland hydrology must be present, unless disturbed or problematic.

Hydrophytic Vegetation Present? **Yes X No**

Remarks: (Include photo numbers here or on a separate sheet.)

Sample plot meets dominance test and prevalence index for hydrophytic vegetation.

SOIL

Sampling Point: SP 1-4

Profile Description: (Describe to the depth needed to document the indicator or confirm the absence of Indicators.)

Depth (inches)	Matrix Color (moist)	%	Redox Features Color (moist)	%	Type [1]	Loc [2]	Texture	Remarks
0 to 5	10YR 4 / 2	100	None				SANDY LOAM	
5 to 17	2.5Y 5 / 2	95	7.5YR5/6	5	C	M	Gravelly clay loam	

[1]Type: C=Concentration, D=Depletion, RM=Reduced Martix, CS=Covered or Coated Sand Grains. [2]Location: PL=Pore Lining, M=Matrix.

Hydric Soil Indicators:

- ☐ Histosol (A1)
- ☐ Histic Epipedon (A2)
- ☐ Black Histic (A3)
- ☐ Hydrogen Sulfide (A4)
- ☐ Depleted Below Dark Surface (A11)
- ☐ Thick Dark Surface (A12)
- ☐ Sandy Mucky Mineral (S1)
- ☐ Sandy Gleyed Matrix (S4)
- ☐ Sandy Redox (S5)
- ☐ Stripped Matrix (S6)
- ☐ Loamy Mucky Mineral (F1) (except MLRA 1)
- ☐ Loamy Gleyed Matrix (F2)
- ☑ Depleted Matrix (F3)
- ☐ Redox Dark Surface (F6)
- ☐ Depleted Dark Surface (F7)
- ☐ Redox Depressions (F8)

Indicators for Problematic Hydric Soils: [3]

- ☐ 2 cm Muck (A10)
- ☐ Red Parent Material (TF2)
- ☐ Very Shallow Dark Surface (TF12)
- ☐ Other (Explain in Remarks)

[3] Indicators of hydrophytic vegetation and wetland hydrology must be present, unless disturbed or problematic.

☐ **Restrictive Layer (if observed):**

Type: _____

Depth (inches): _____

Hydric Soil Present? Yes X No ____

Remarks:
Hydric soils present in the sample plot include a Depleted Matrix (F3).

HYDROLOGY

Wetland Hydrology Indicators:

Primary Indicators (minimum of one is required; check all that apply)

- ☐ Surface Water (A1)
- ☐ High Water Table (A2)
- ☐ Saturation (A3)
- ☐ Water Marks (B1)
- ☐ Sediment Deposits (B2)
- ☐ Drift Deposits (B3)
- ☐ Algal Mat or Crust (B4)
- ☐ Iron Deposits (B5)
- ☐ Surface Soil Cracks (B6)
- ☐ Inundation Visible on Aerial Imagery (B7)
- ☐ Sparsely Vegetated Concave Surface (B8)
- ☐ Water-Stained Leaves (B9) (except MLRA 1, 2, 4A and 4B)
- ☐ Salt Crust (B11)
- ☐ Aquatic Invertebrates (B13)
- ☐ Hydrogen Sulfide Odor (C1)
- ☐ Oxidized Rhizospheres along Living Roots (C3)
- ☐ Presence of Reduced Iron (C4)
- ☐ Recent Iron Reduction in Tilled Soils (C6)
- ☐ Stunted or Stressed Plants (D1) (LRR A)
- ☐ Other (Explain in Remarks)

Secondary Indicators (minimum of two required)

- ☑ Water-Stained Leaves (B9) (MLRA 1, 2, 4A, and 4B)
- ☐ Drainage Patterns (B10)
- ☐ Dry-Season Water Table (C2)
- ☐ Saturation Visible on Aerial Imag.(C9)
- ☑ Geomorphic Position (D2)
- ☐ Shallow Aquitard (D3)
- ☑ FAC-Neutral Test (D5)
- ☐ Paised Ant Mounds (D6) (LRR A)
- ☐ Frost-Heave Hummocks (D7)

Field Observations:

Surface Water Present? Yes ____ No X Depth (inches): _____

Water Table Present? Yes ____ No X Depth (inches): _____

Saturation Present? Yes ____ No X Depth (inches): _____

(includes capillary fringe)

Wetland Hydrology Present? Yes X No ____

Describe Recorded Data (stream gauge, monitoring well, aerial photos, previous inspections), if available:

Remarks:
No primary hydrology indicators were present during the site visit due to severe drought conditions in the region. However, previous wetland delineations conducted in 2013 noted surface saturation and a water table at 6". Based on presence of hydrophytic vegetation, hydric soil and previoulsy documented hydrology and the presence of 3 secodary indicato wetland hydrology is present in the sample plot.

WETLAND DETERMINATION DATA FORM - Western Mountains, Valleys, and Coast Region

Project/Site: NE Spring Blvd | City/County: Bellevue | Sampling Date: 7/29/2015

Applicant/Owner: City of Bellevue | State: WA | Sampling Point: SP 1-5

Investigators: Maki Dalzell, Dangelei Fox | Section, Township, Range: S 28 T 25N R 5E

Landform (hillslope, terrace, etc.): Terrace | Local Relief (concave, convex, none): None | Slope(%):

Subregion (LRR): A | Lat: 47.62340644 | Long: -122.1831535 | Datum: NAD 83

Soil Map Unit Name: Alderwood gravelly sandy loam 8-15% slope | NWI Classification: None

Are climatic / hydrologic conditions on the site typical for this time of year? Yes ____ No X (If No, explain in Remarks)

Are Vegetation ____, Soil ____, Hydrology ____, significantly disturbed? Are "Normal Circumstances" present? Yes ____ No X

Are Vegetation ____, Soil ____, Hydrology ____, naturally problematic? (If needed, explain any answers in Remarks.)

SUMMARY OF FINDINGS - Attach a site map showing sampling point locations, transects, important features, etc.

Hydrophytic Vegetation Present?	Yes	____	No	X	
Hydric Soil Present?	Yes	____	No	X	**Is the Sampled Area within a Wetland?** Yes ____ No X
Wetland Hydrology Present?	Yes		No	X	

Remarks:
No wetland criteria are present in the sample plot, therefore the sample plot is not located in a wetland.

VEGETATION – Use scientific names of plants.

	Absolute % Cover	Dominant Species	Indicator Status
Tree Stratum			
Shrub Stratum (Plot size: 30 Ft)			
Crataegus monogyna	50	Y	FAC
Ilex aquifolium	5	N	FACU
	55	=Total Cover	
Herb Stratum			
Vine Stratum (Plot size: 30 Ft)			
Hedera helix	90	Y	FACU
Rubus armeniacus	5	N	FACU
	95	=Total Cover	

% Bare Ground in Herb Stratum ____

Dominance Test Worksheet:

Number of Dominant Species That Are OBL, FACW, or FAC: 1 (A)

Total Number of Dominant Species Across all Strata: 2 (B)

Percent of Dominant Species That Are OBL, FACW, or FAC: 50.0% (A/B)

Prevalence Index Worksheet:

Total % Cover of:		Multiply by:	
OBL species	0	x 1 =	0
FACW species	0	x 2 =	0
FAC species	50	x 3 =	150
FACU species	100	x 4 =	400
UPL species	0	x 5 =	0
Column Totals:	150 (A)		550 (B)

Prevalence Index = B/A= 3.67

Hydrophytic Vegetation Indicators:

____ Rapid Test for Hydrophytic Vegetation

____ Dominance Test > 50%

____ Prevalence Index ≤ 3.0

____ Morphological Adaptations (Provide supporting data in Remarks or on a separate sheet)

____ Problematic Hydrophytic Vegetation (Explain)

Indicators of hydric soil and wetland hydrology must be present, unless disturbed or problematic.

Hydrophytic Vegetation Present? Yes ____ No X

Remarks: (Include photo numbers here or on a separate sheet.)

No hydric vegetation is present in the sample plot.

SOIL

Sampling Point: SP 1-5

Profile Description: (Describe to the depth needed to document the indicator or confirm the absence of Indicators.)

Depth (inches)	Matrix Color (moist)	Matrix %	Redox Features Color (moist)	Redox Features %	Type [1]	Loc [2]	Texture	Remarks
0 to 18	10YR 3 / 2	100	None				SANDY LOAM	

[1]Type: C=Concentration, D=Depletion, RM=Reduced Martix, CS=Covered or Coated Sand Grains. [2]Location: PL=Pore Lining, M=Matrix.

Hydric Soil Indicators:

- ☐ Histosol (A1)
- ☐ Histic Epipedon (A2)
- ☐ Black Histic (A3)
- ☐ Hydrogen Sulfide (A4)
- ☐ Depleted Below Dark Surface (A11)
- ☐ Thick Dark Surface (A12)
- ☐ Sandy Mucky Mineral (S1)
- ☐ Sandy Gleyed Matrix (S4)
- ☐ Sandy Redox (S5)
- ☐ Stripped Matrix (S6)
- ☐ Loamy Mucky Mineral (F1) (except MLRA 1)
- ☐ Loamy Gleyed Matrix (F2)
- ☐ Depleted Matrix (F3)
- ☐ Redox Dark Surface (F6)
- ☐ Depleted Dark Surface (F7)
- ☐ Redox Depressions (F8)

Indicators for Problematic Hydric Soils: [3]

- ☐ 2 cm Muck (A10)
- ☐ Red Parent Material (TF2)
- ☐ Very Shallow Dark Surface (TF12)
- ☐ Other (Explain in Remarks)

[3] Indicators of hydrophytic vegetation and wetland hydrology must be present, unless disturbed or problematic.

☐ **Restrictive Layer (if observed):**

Type:

Depth (inches):

Hydric Soil Present? Yes ____ No X

Remarks:
No hydric soil indicators are present in the sample plot.

HYDROLOGY

Wetland Hydrology Indicators:

Primary Indicators (minimum of one is required; check all that apply)

- ☐ Surface Water (A1)
- ☐ High Water Table (A2)
- ☐ Saturation (A3)
- ☐ Water Marks (B1)
- ☐ Sediment Deposits (B2)
- ☐ Drift Deposits (B3)
- ☐ Algal Mat or Crust (B4)
- ☐ Iron Deposits (B5)
- ☐ Surface Soil Cracks (B6)
- ☐ Inundation Visible on Aerial Imagery (B7)
- ☐ Sparsely Vegetated Concave Surface (B8)
- ☐ Water-Stained Leaves (B9) (except MLRA 1, 2, 4A and 4B)
- ☐ Salt Crust (B11)
- ☐ Aquatic Invertebrates (B13)
- ☐ Hydrogen Sulfide Odor (C1)
- ☐ Oxidized Rhizospheres along Living Roots (C3)
- ☐ Presence of Reduced Iron (C4)
- ☐ Recent Iron Reduction in Tilled Soils (C6)
- ☐ Stunted or Stressed Plants (D1) (LRR A)
- ☐ Other (Explain in Remarks)

Secondary Indicators (minimum of two required)

- ☐ Water-Stained Leaves (B9) (MLRA 1, 2, 4A, and 4B)
- ☐ Drainage Patterns (B10)
- ☐ Dry-Season Water Table (C2)
- ☐ Saturation Visible on Aerial Imag.(C9)
- ☐ Geomorphic Position (D2)
- ☐ Shallow Aquitard (D3)
- ☐ FAC-Neutral Test (D5)
- ☐ Paised Ant Mounds (D6) (LRR A)
- ☐ Frost-Heave Hummocks (D7)

Field Observations:

Surface Water Present?	Yes	____	No	X	Depth (inches):
Water Table Present?	Yes	____	No	X	Depth (inches):
Saturation Present? (includes capillary fringe)	Yes	____	No	X	Depth (inches):

Wetland Hydrology Present? Yes ____ No X

Describe Recorded Data (stream gauge, monitoring well, aerial photos, previous inspections), if available:

Remarks:
No wetland hydrology indicators are present in the sample plot.

WETLAND DETERMINATION DATA FORM - Western Mountains, Valleys, and Coast Region

Project/Site: NE Spring Blvd | City/County: Bellevue | Sampling Date: 7/29/2015

Applicant/Owner: City of Bellevue | State: WA | Sampling Point: SP 1-6

Investigators: Maki Dalzell, Dangelei Fox | Section, Township, Range: S 28 T 25N R 5E

Landform (hillslope, terrace, etc.): Terrace | Local Relief (concave, convex, none): Convex | Slope(%): 0

Subregion (LRR): A | Lat: 47.62311846 | Long: -122.1827551 | Datum: NAD 83

Soil Map Unit Name: Alderwood gravelly sandy loam, 8-15 % slopes | NWI Classification: PEM

Are climatic / hydrologic conditions on the site typical for this time of year? Yes ____ No X (If No, explain in Remarks)

Are Vegetation ____, Soil ____, Hydrology ____, significantly disturbed? Are "Normal Circumstances" present? Yes ____ No X

Are Vegetation ____, Soil ____, Hydrology ____, naturally problematic? (If needed, explain any answers in Remarks.)

SUMMARY OF FINDINGS - Attach a site map showing sampling point locations, transects, important features, etc.

Hydrophytic Vegetation Present?	Yes	X	No	
Hydric Soil Present?	Yes	X	No	
Wetland Hydrology Present?	Yes	X	No	

Is the Sampled Area within a Wetland? **Yes X No**

Remarks:
Nearly all Washington State is experiencing a severe drought and precipitation levels are below average for this area for May-July. All 3 wetland criteria are present.

VEGETATION – Use scientific names of plants.

	Absolute % Cover	Dominant Species	Indicator Status
Tree Stratum			
Shrub Stratum			
Herb Stratum (Plot size: 6 Ft)			
Poa pratensis	80	Y	FAC
Phalaris arundinacea	15	N	FACW
Juncus effusus	5	N	FACW
	100	=Total Cover	
Vine Stratum			

% Bare Ground in Herb Stratum ____

Dominance Test Worksheet:

Number of Dominant Species That Are OBL, FACW, or FAC: 1 (A)

Total Number of Dominant Species Across all Strata: 1 (B)

Percent of Dominant Species That Are OBL, FACW, or FAC: 100.0% (A/B)

Prevalence Index Worksheet:

Total % Cover of:		Multiply by:	
OBL species	0	x 1 =	0
FACW species	20	x 2 =	40
FAC species	80	x 3 =	240
FACU species	0	x 4 =	0
UPL species	0	x 5 =	0
Column Totals:	100 (A)		280 (B)

Prevalence Index = B/A = 2.80

Hydrophytic Vegetation Indicators:

____ Rapid Test for Hydrophytic Vegetation

X Dominance Test > 50%

X Prevalence Index ≤ 3.0

____ Morphological Adaptations (Provide supporting data in Remarks or on a separate sheet)

____ Problematic Hydrophytic Vegetation (Explain)

Indicators of hydric soil and wetland hydrology must be present, unless disturbed or problematic.

Hydrophytic Vegetation Present? **Yes X No**

Remarks: (Include photo numbers here or on a separate sheet.)

Sample plot meets dominance test and prevalence index for hydrophytic vegetation.

SOIL

Sampling Point: SP 1-6

Profile Description: (Describe to the depth needed to document the indicator or confirm the absence of Indicators.)

Depth (inches)	Matrix Color (moist)	%	Redox Features Color (moist)	%	Type [1]	Loc [2]	Texture	Remarks
0 to 6	10YR 4 / 2	100	None	0			SANDY LOAM	
6 to 12	10YR 4 / 2	95	7.5YR4/6	5	C	M	SILT LOAM	
12 to 18	5Y 5 / 1	90	7.5YR4/6	10	C	M	Gravelly Silty Loam	

[1]Type: C=Concentration, D=Depletion, RM=Reduced Martix, CS=Covered or Coated Sand Grains. [2]Location: PL=Pore Lining, M=Matrix.

Hydric Soil Indicators:

- ☐ Histosol (A1)
- ☐ Histic Epipedon (A2)
- ☐ Black Histic (A3)
- ☐ Hydrogen Sulfide (A4)
- ☐ Depleted Below Dark Surface (A11)
- ☐ Thick Dark Surface (A12)
- ☐ Sandy Mucky Mineral (S1)
- ☐ Sandy Gleyed Matrix (S4)
- ☐ Sandy Redox (S5)
- ☐ Stripped Matrix (S6)
- ☐ Loamy Mucky Mineral (F1) (except MLRA 1)
- ☐ Loamy Gleyed Matrix (F2)
- ☑ Depleted Matrix (F3)
- ☐ Redox Dark Surface (F6)
- ☐ Depleted Dark Surface (F7)
- ☐ Redox Depressions (F8)

Indicators for Problematic Hydric Soils: [3]

- ☐ 2 cm Muck (A10)
- ☐ Red Parent Material (TF2)
- ☐ Very Shallow Dark Surface (TF12)
- ☐ Other (Explain in Remarks)

[3] Indicators of hydrophytic vegetation and wetland hydrology must be present, unless disturbed or problematic.

☐ **Restrictive Layer (if observed):**

Type: _____

Depth (inches): _____

Hydric Soil Present? Yes X No _____

Remarks:
Hydric soil indicator present in the sample plot includes depleted Matrix (F3).

HYDROLOGY

Wetland Hydrology Indicators:

Primary Indicators (minimum of one is required; check all that apply)

- ☐ Surface Water (A1)
- ☐ High Water Table (A2)
- ☐ Saturation (A3)
- ☐ Water Marks (B1)
- ☐ Sediment Deposits (B2)
- ☐ Drift Deposits (B3)
- ☐ Algal Mat or Crust (B4)
- ☐ Iron Deposits (B5)
- ☐ Surface Soil Cracks (B6)
- ☐ Inundation Visible on Aerial Imagery (B7)
- ☐ Sparsely Vegetated Concave Surface (B8)
- ☐ Water-Stained Leaves (B9) (except MLRA 1, 2, 4A and 4B)
- ☐ Salt Crust (B11)
- ☐ Aquatic Invertebrates (B13)
- ☐ Hydrogen Sulfide Odor (C1)
- ☐ Oxidized Rhizospheres along Living Roots (C3)
- ☐ Presence of Reduced Iron (C4)
- ☐ Recent Iron Reduction in Tilled Soils (C6)
- ☐ Stunted or Stressed Plants (D1) (LRR A)
- ☐ Other (Explain in Remarks)

Secondary Indicators (minimum of two required)

- ☐ Water-Stained Leaves (B9) (MLRA 1, 2, 4A, and 4B)
- ☐ Drainage Patterns (B10)
- ☐ Dry-Season Water Table (C2)
- ☐ Saturation Visible on Aerial Imag.(C9)
- ☐ Geomorphic Position (D2)
- ☐ Shallow Aquitard (D3)
- ☐ FAC-Neutral Test (D5)
- ☐ Paised Ant Mounds (D6) (LRR A)
- ☐ Frost-Heave Hummocks (D7)

Field Observations:

Surface Water Present?	Yes _____	No X	Depth (inches):	_____	
Water Table Present?	Yes _____	No X	Depth (inches):	_____	
Saturation Present? (includes capillary fringe)	Yes _____	No X	Depth (inches):	_____	

Wetland Hydrology Present? Yes X No _____

Describe Recorded Data (stream gauge, monitoring well, aerial photos, previous inspections), if available:

Remarks:
No primary or secondary hydrology indicators were present during the site visit due to severe drought conditions in the region. However, previous wetland delineations conducted in 2013 noted surface saturation and a water table at 6". Based on presence of hydrophytic vegetation, hydric soil and previoulsy documented hydrology, wetland hydrology is present in the sample plot.

WETLAND DETERMINATION DATA FORM - Western Mountains, Valleys, and Coast Region

Project/Site: NE Spring Blvd | City/County: Bellevue | Sampling Date: 7/29/2015

Applicant/Owner: City of Bellevue | State: WA | Sampling Point: SP 1-7

Investigators: Maki Dalzell, Dangelei Fox | Section, Township, Range: S 28 T 25N R 5E

Landform (hillslope, terrace, etc.): Terrace | Local Relief (concave, convex, none): Concave | Slope(%): 3

Subregion (LRR): A | Lat: 47.6233443 | Long: -122.182805 | Datum: NAD 83

Soil Map Unit Name: Alderwood gravelly sandy loam 8-15% slope | NWI Classification: NONE

Are climatic / hydrologic conditions on the site typical for this time of year? Yes ____ No X (If No, explain in Remarks)

Are Vegetation ____, Soil ____, Hydrology ____, significantly disturbed? Are "Normal Circumstances" present? Yes ____ No X

Are Vegetation ____, Soil ____, Hydrology ____, naturally problematic? (If needed, explain any answers in Remarks.)

SUMMARY OF FINDINGS - Attach a site map showing sampling point locations, transects, important features, etc.

Hydrophytic Vegetation Present?	Yes	____	No	X	
Hydric Soil Present?	Yes	____	No	X	**Is the Sampled Area within a Wetland?** **Yes** ____ **No** X
Wetland Hydrology Present?	Yes		No	X	

Remarks:
Sample plot is not located within a wetland. No wetland criteria are present.

VEGETATION – Use scientific names of plants.

	Absolute % Cover	Dominant Species	Indicator Status
Tree Stratum			
Shrub Stratum (Plot size: 30 Ft)			
Cystis scoparius	15	Y	FACU
	15	=Total Cover	
Herb Stratum (Plot size: 6 Ft)			
Poa pratensis	60	Y	FAC
Phalaris arundinacea	25	Y	FACW
Leucanthemum vulgare	10	N	FACU
Juncus effusus	5	N	FACW
	100	=Total Cover	
Vine Stratum (Plot size: 30 Ft)			
Rubus armeniacus	20	Y	FACU
	20	=Total Cover	

% Bare Ground in Herb Stratum ____

Dominance Test Worksheet:

Number of Dominant Species That Are OBL, FACW, or FAC: 2 (A)

Total Number of Dominant Species Across all Strata: 4 (B)

Percent of Dominant Species That Are OBL, FACW, or FAC: 50.0% (A/B)

Prevalence Index Worksheet:

Total % Cover of:		Multiply by:	
OBL species	0	x 1 =	0
FACW species	30	x 2 =	60
FAC species	60	x 3 =	180
FACU species	45	x 4 =	180
UPL species	0	x 5 =	0
Column Totals:	135 (A)		420 (B)

Prevalence Index = B/A = 3.11

Hydrophytic Vegetation Indicators:

____ Rapid Test for Hydrophytic Vegetation

____ Dominance Test > 50%

____ Prevalence Index ≤ 3.0

____ Morphological Adaptations (Provide supporting data in Remarks or on a separate sheet)

____ Problematic Hydrophytic Vegetation (Explain)

Indicators of hydric soil and wetland hydrology must be present, unless disturbed or problematic.

Hydrophytic Vegetation Present? **Yes** ____ **No** X

Remarks: (Include photo numbers here or on a separate sheet.)

No hydrophytic vegetation is present in the sample plot.

SOIL

Sampling Point: SP 1-7

Profile Description: (Describe to the depth needed to document the indicator or confirm the absence of Indicators.)

Depth (inches)	Matrix Color (moist)	%	Redox Features Color (moist)	%	Type [1]	Loc [2]	Texture	Remarks
0 to 7	10YR 4 / 2	78	None				SILT LOAM	
0 to 7	2.5Y 5 / 3	20	10YR4/6	2	C	M	SILT LOAM	
7 to 18	10YR 4 / 3	88					VERY FINE SANDY LOAM	
7 to 18	10YR 4 / 2	10	10YR4/6	2	C	M	VERY FINE SANDY LOAM	

[1]Type: C=Concentration, D=Depletion, RM=Reduced Martix, CS=Covered or Coated Sand Grains. [2]Location: PL=Pore Lining, M=Matrix.

Hydric Soil Indicators:

- ☐ Histosol (A1)
- ☐ Histic Epipedon (A2)
- ☐ Black Histic (A3)
- ☐ Hydrogen Sulfide (A4)
- ☐ Depleted Below Dark Surface (A11)
- ☐ Thick Dark Surface (A12)
- ☐ Sandy Mucky Mineral (S1)
- ☐ Sandy Gleyed Matrix (S4)
- ☐ Sandy Redox (S5)
- ☐ Stripped Matrix (S6)
- ☐ Loamy Mucky Mineral (F1) (except MLRA 1)
- ☐ Loamy Gleyed Matrix (F2)
- ☐ Depleted Matrix (F3)
- ☐ Redox Dark Surface (F6)
- ☐ Depleted Dark Surface (F7)
- ☐ Redox Depressions (F8)

Indicators for Problematic Hydric Soils: [3]

- ☐ 2 cm Muck (A10)
- ☐ Red Parent Material (TF2)
- ☐ Very Shallow Dark Surface (TF12)
- ☐ Other (Explain in Remarks)

[3] Indicators of hydrophytic vegetation and wetland hydrology must be present, unless disturbed or problematic.

☐ **Restrictive Layer (if observed):**

Type: _____

Depth (inches): _____

Hydric Soil Present? Yes ____ No X

Remarks:
No hydric soil indicators are present. Likely fill, sample plot is located on a berm.

HYDROLOGY

Wetland Hydrology Indicators:

Primary Indicators (minimum of one is required; check all that apply)

- ☐ Surface Water (A1)
- ☐ High Water Table (A2)
- ☐ Saturation (A3)
- ☐ Water Marks (B1)
- ☐ Sediment Deposits (B2)
- ☐ Drift Deposits (B3)
- ☐ Algal Mat or Crust (B4)
- ☐ Iron Deposits (B5)
- ☐ Surface Soil Cracks (B6)
- ☐ Inundation Visible on Aerial Imagery (B7)
- ☐ Sparsely Vegetated Concave Surface (B8)
- ☐ Water-Stained Leaves (B9) (except MLRA 1, 2, 4A and 4B)
- ☐ Salt Crust (B11)
- ☐ Aquatic Invertebrates (B13)
- ☐ Hydrogen Sulfide Odor (C1)
- ☐ Oxidized Rhizospheres along Living Roots (C3)
- ☐ Presence of Reduced Iron (C4)
- ☐ Recent Iron Reduction in Tilled Soils (C6)
- ☐ Stunted or Stressed Plants (D1) (LRR A)
- ☐ Other (Explain in Remarks)

Secondary Indicators (minimum of two required)

- ☐ Water-Stained Leaves (B9) (MLRA 1, 2, 4A, and 4B)
- ☐ Drainage Patterns (B10)
- ☐ Dry-Season Water Table (C2)
- ☐ Saturation Visible on Aerial Imag.(C9)
- ☐ Geomorphic Position (D2)
- ☐ Shallow Aquitard (D3)
- ☐ FAC-Neutral Test (D5)
- ☐ Paised Ant Mounds (D6) (LRR A)
- ☐ Frost-Heave Hummocks (D7)

Field Observations:

Surface Water Present? Yes ____ No X Depth (inches): _____

Water Table Present? Yes ____ No X Depth (inches): _____

Saturation Present? Yes ____ No X Depth (inches): _____

(includes capillary fringe)

Wetland Hydrology Present? Yes ____ No X

Describe Recorded Data (stream gauge, monitoring well, aerial photos, previous inspections), if available:

Remarks:
No primary or secondary wetland hydrolgoy indicators are present.

Appendix C: Wetland Photographs

This page intentionally left blank.

Photo 1: Facing north from SP 1-1.

Photo 2: Facing east from Wetland plot SP 1-2.

Photo 3: Facing southwest from berm adjacent to railroad tracks at north end of Wetland 1.

Photo 4. Facing south from wetland sample plot SP 1-2.

Photo 5. Facing east, from wetland sample plot 1-4.

Photo 6. Facing west, from wetland sample plot 1-4. Wetland edge.

Photo 7. Facing southwest forested area west of Wetland 1.

Photo 8. Facing east, upland edge of Wetland 1.

Appendix D: Ecology Rating Forms

This page intentionally left blank.

Wetland name or number WL 1

RATING SUMMARY – Western Washington

Name of wetland (or ID #): WL 1 Date of site visit: 7/29/15

Rated by MD Trained by Ecology? ✓ Yes ___ No Date of training March 2009

HGM Class used for rating Depressional Wetland has multiple HGM classes? ___ Y ✓ N

NOTE: Form is not complete without the figures requested *(figures can be combined).*

Source of base aerial photo/map Bing Map / ESRI online

OVERALL WETLAND CATEGORY X (based on functions ✓ or special characteristics ___)

1. Category of wetland based on FUNCTIONS

___ **Category I** – Total score = 23 - 27

___ **Category II** – Total score = 20 - 22

___ **Category III** – Total score = 16 - 19

X **Category IV** – Total score = 9 - 15

FUNCTION	Improving Water Quality	Hydrologic	Habitat	
		Circle the appropriate ratings		
Site Potential	H (M) L	H M (L)	H M (L)	
Landscape Potential	H (M) L	(H) M L	H M (L)	
Value	H M (L)	(H) M (L)	H M (L)	TOTAL
Score Based on Ratings	5	5	3	13

Score for each function based on three ratings *(order of ratings is not important)*

9 = H,H,H
8 = H,H,M
7 = H,H,L
7 = H,M,M
6 = H,M,L
6 = M,M,M
5 = H,L,L
5 = M,M,L
4 = M,L,L
3 = L,L,L

2. Category based on SPECIAL CHARACTERISTICS of wetland

CHARACTERISTIC	CATEGORY
Estuarine	I II
Wetland of High Conservation Value	I
Bog	I
Mature Forest	I
Old Growth Forest	I
Coastal Lagoon	I II
Interdunal	I II III IV
None of the above	N/A

Wetland name or number WL

Maps and figures required to answer questions correctly for Western Washington

Depressional Wetlands

Map of:	To answer questions:	Figure #
Cowardin plant classes	D 1.3, H 1.1, H 1.4	D1
Hydroperiods	D 1.4, H 1.2	D2
Location of outlet *(can be added to map of hydroperiods)*	D 1.1, D 4.1	D2
Boundary of area within 150 ft of the wetland *(can be added to another figure)*	D 2.2, D 5.2	D3
Map of the contributing basin	D 4.3, D 5.3	D3
1 km Polygon: Area that extends 1 km from entire wetland edge - including polygons for accessible habitat and undisturbed habitat	H 2.1, H 2.2, H 2.3	D4
Screen capture of map of 303(d) listed waters in basin (from Ecology website)	D 3.1, D 3.2	
Screen capture of list of TMDLs for WRIA in which unit is found (from web)	D 3.3	

Riverine Wetlands

Map of:	To answer questions:	Figure #
Cowardin plant classes	H 1.1, H 1.4	
Hydroperiods	H 1.2	
Ponded depressions	R 1.1	
Boundary of area within 150 ft of the wetland *(can be added to another figure)*	R 2.4	
Plant cover of trees, shrubs, and herbaceous plants	R 1.2, R 4.2	
Width of unit vs. width of stream *(can be added to another figure)*	R 4.1	
Map of the contributing basin	R 2.2, R 2.3, R 5.2	
1 km Polygon: Area that extends 1 km from entire wetland edge - including polygons for accessible habitat and undisturbed habitat	H 2.1, H 2.2, H 2.3	
Screen capture of map of 303(d) listed waters in basin (from Ecology website)	R 3.1	
Screen capture of list of TMDLs for WRIA in which unit is found (from web)	R 3.2, R 3.3	

Lake Fringe Wetlands

Map of:	To answer questions:	Figure #
Cowardin plant classes	L 1.1, L 4.1, H 1.1, H 1.4	
Plant cover of trees, shrubs, and herbaceous plants	L 1.2	
Boundary of area within 150 ft of the wetland *(can be added to another figure)*	L 2.2	
1 km Polygon: Area that extends 1 km from entire wetland edge - including polygons for accessible habitat and undisturbed habitat	H 2.1, H 2.2, H 2.3	
Screen capture of map of 303(d) listed waters in basin (from Ecology website)	L 3.1, L 3.2	
Screen capture of list of TMDLs for WRIA in which unit is found (from web)	L 3.3	

Slope Wetlands

Map of:	To answer questions:	Figure #
Cowardin plant classes	H 1.1, H 1.4	
Hydroperiods	H 1.2	
Plant cover of **dense** trees, shrubs, and herbaceous plants	S 1.3	
Plant cover of **dense, rigid** trees, shrubs, and herbaceous plants *(can be added to figure above)*	S 4.1	
Boundary of 150 ft buffer (can be added to another figure)	S 2.1, S 5.1	
1 km Polygon: Area that extends 1 km from entire wetland edge - including polygons for accessible habitat and undisturbed habitat	H 2.1, H 2.2, H 2.3	
Screen capture of map of 303(d) listed waters in basin (from Ecology website)	S 3.1, S 3.2	
Screen capture of list of TMDLs for WRIA in which unit is found (from web)	S 3.3	

Wetland name or number WW

HGM Classification of Wetlands in Western Washington

For questions 1-7, the criteria described must apply to the entire unit being rated.

If the hydrologic criteria listed in each question do not apply to the entire unit being rated, you probably have a unit with multiple HGM classes. In this case, identify which hydrologic criteria in questions 1-7 apply, and go to Question 8.

1. Are the water levels in the entire unit usually controlled by tides except during floods?

   NO – go to 2 **YES** – the wetland class is **Tidal Fringe** – go to 1.1

   1.1 Is the salinity of the water during periods of annual low flow below 0.5 ppt (parts per thousand)?

   NO – Saltwater Tidal Fringe (Estuarine) **YES – Freshwater Tidal Fringe**
   *If your wetland can be classified as a Freshwater Tidal Fringe use the forms for **Riverine** wetlands. If it is Saltwater Tidal Fringe it is an **Estuarine** wetland and is not scored. This method **cannot** be used to score functions for estuarine wetlands.*

2. The entire wetland unit is flat and precipitation is the only source (>90%) of water to it. Groundwater and surface water runoff are NOT sources of water to the unit.

   NO – go to 3 **YES** – The wetland class is **Flats**
   *If your wetland can be classified as a Flats wetland, use the form for **Depressional** wetlands.*

3. Does the entire wetland unit **meet all** of the following criteria?
   ___The vegetated part of the wetland is on the shores of a body of permanent open water (without any plants on the surface at any time of the year) at least 20 ac (8 ha) in size;
   ___At least 30% of the open water area is deeper than 6.6 ft (2 m).

   NO – go to 4 **YES** – The wetland class is **Lake Fringe** (Lacustrine Fringe)

4. Does the entire wetland unit **meet all** of the following criteria?
   ___The wetland is on a slope (*slope can be very gradual*),
   ___The water flows through the wetland in one direction (unidirectional) and usually comes from seeps. It may flow subsurface, as sheetflow, or in a swale without distinct banks,
   ___The water leaves the wetland **without being impounded**.

   NO – go to 5 **YES** – The wetland class is **Slope**

   NOTE: Surface water does not pond in these type of wetlands except occasionally in very small and shallow depressions or behind hummocks (depressions are usually <3 ft diameter and less than 1 ft deep).

5. Does the entire wetland unit **meet all** of the following criteria?
   ___The unit is in a valley, or stream channel, where it gets inundated by overbank flooding from that stream or river,
   ___The overbank flooding occurs at least once every 2 years.

Wetland name or number WL 1

NO – go to 6 **YES** – The wetland class is **Riverine**

NOTE: The Riverine unit can contain depressions that are filled with water when the river is not flooding

6. Is the entire wetland unit in a topographic depression in which water ponds, or is saturated to the surface, at some time during the year? *This means that any outlet, if present, is higher than the interior of the wetland.*

NO – go to 7 A small portion of this WL is on slope **YES** – The wetland class is **Depressional**

7. Is the entire wetland unit located in a very flat area with no obvious depression and no overbank flooding? The unit does not pond surface water more than a few inches. The unit seems to be maintained by high groundwater in the area. The wetland may be ditched, but has no obvious natural outlet.

NO – go to 8 **YES** – The wetland class is **Depressional**

8. Your wetland unit seems to be difficult to classify and probably contains several different HGM classes. For example, seeps at the base of a slope may grade into a riverine floodplain, or a small stream within a Depressional wetland has a zone of flooding along its sides. GO BACK AND IDENTIFY WHICH OF THE HYDROLOGIC REGIMES DESCRIBED IN QUESTIONS 1-7 APPLY TO DIFFERENT AREAS IN THE UNIT (make a rough sketch to help you decide). Use the following table to identify the appropriate class to use for the rating system if you have several HGM classes present within the wetland unit being scored.

NOTE: Use this table only if the class that is recommended in the second column represents 10% or more of the total area of the wetland unit being rated. If the area of the HGM class listed in column 2 is less than 10% of the unit; classify the wetland using the class that represents more than 90% of the total area. Slope portion of this wetland is < 10% of the entire unit.

HGM classes within the wetland unit being rated	HGM class to use in rating
Slope + Riverine	Riverine
Slope + Depressional	Depressional
Slope + Lake Fringe	Lake Fringe
Depressional + Riverine along stream within boundary of depression	Depressional
Depressional + Lake Fringe	Depressional
Riverine + Lake Fringe	Riverine
Salt Water Tidal Fringe and any other class of freshwater wetland	Treat as ESTUARINE

*If you are still unable to determine which of the above criteria apply to your wetland, or if you have **more than 2 HGM classes** within a wetland boundary, classify the wetland as Depressional for the rating.*

Wetland name or number WL 1

DEPRESSIONAL AND FLATS WETLANDS

Water Quality Functions - Indicators that the site functions to improve water quality

D 1.0. Does the site have the potential to improve water quality?	
D 1.1. Characteristics of surface water outflows from the wetland: Wetland is a depression or flat depression (QUESTION 7 on key) with no surface water leaving it (no outlet). points = 3 Wetland has an intermittently flowing stream or ditch, OR highly constricted permanently flowing outlet. points = 2 WL sheet flows to a ditch along RR track Wetland has an unconstricted, or slightly constricted, surface outlet that is permanently flowing points = 1 Wetland is a flat depression (QUESTION 7 on key), whose outlet is a permanently flowing ditch. points = 1	2
D 1.2. The soil 2 in below the surface (or duff layer) is true clay or true organic *(use NRCS definitions)*. Yes = 4 No = 0	0
D 1.3. Characteristics and distribution of persistent plants (Emergent, Scrub-shrub, and/or Forested Cowardin classes): Wetland has persistent, ungrazed, plants > 95% of area points = 5 Wetland has persistent, ungrazed, plants > ½ of area points = 3 Wetland has persistent, ungrazed plants > $^1/_{10}$ of area points = 1 Wetland has persistent, ungrazed plants < $^1/_{10}$ of area points = 0	3
D 1.4. Characteristics of seasonal ponding or inundation: *This is the area that is ponded for at least 2 months. See description in manual.* Area seasonally ponded is > ½ total area of wetland points = 4 Area seasonally ponded is > ¼ total area of wetland points = 2 Area seasonally ponded is < ¼ total area of wetland points = 0	2
Total for D 1 — Add the points in the boxes above	7

Rating of Site Potential If score is: ___12-16 = H ✓ 6-11 = M ___0-5 = L *Record the rating on the first page*

D 2.0. Does the landscape have the potential to support the water quality function of the site?	
D 2.1. Does the wetland unit receive stormwater discharges? WL 1 is adjacent to RR track Yes = 1 No = 0	1
D 2.2. Is > 10% of the area within 150 ft of the wetland in land uses that generate pollutants? Yes = 1 No = 0	1
D 2.3. Are there septic systems within 250 ft of the wetland? Yes = 1 No = 0	0
D 2.4. Are there other sources of pollutants coming into the wetland that are not listed in questions D 2.1-D 2.3? Source_____ Yes = 1 No = 0	0
Total for D 2 — Add the points in the boxes above	2

Rating of Landscape Potential If score is: ___3 or 4 = H ✓ 1 or 2 = M ___0 = L *Record the rating on the first page*

D 3.0. Is the water quality improvement provided by the site valuable to society?	
D 3.1. Does the wetland discharge directly (i.e., within 1 mi) to a stream, river, lake, or marine water that is on the 303(d) list? Yes = 1 No = 0	0
D 3.2. Is the wetland in a basin or sub-basin where an aquatic resource is on the 303(d) list? Yes = 1 No = 0	0
D 3.3. Has the site been identified in a watershed or local plan as important for maintaining water quality (*answer YES if there is a TMDL for the basin in which the unit is found*)? Yes = 2 No = 0	0
Total for D 3 — Add the points in the boxes above	0

Rating of Value If score is: ___2-4 = H ___1 = M ✓ 0 = L *Record the rating on the first page*

Wetland name or number WL 1

DEPRESSIONAL AND FLATS WETLANDS

Hydrologic Functions - Indicators that the site functions to reduce flooding and stream degradation

D 4.0. Does the site have the potential to reduce flooding and erosion?

D 4.1. Characteristics of surface water outflows from the wetland:

Wetland is a depression or flat depression with no surface water leaving it (no outlet)	points = 4	
Wetland has an intermittently flowing stream or ditch, OR highly constricted permanently flowing outlet	points = 2	2
Wetland is a flat depression (QUESTION 7 on key), whose outlet is a permanently flowing ditch	points = 1	
Wetland has an unconstricted, or slightly constricted, surface outlet that is permanently flowing	points = 0	

D 4.2. Depth of storage during wet periods: *Estimate the height of ponding above the bottom of the outlet. For wetlands with no outlet, measure from the surface of permanent water or if dry, the deepest part.*

Marks of ponding are 3 ft or more above the surface or bottom of outlet	points = 7	
Marks of ponding between 2 ft to < 3 ft from surface or bottom of outlet	points = 5	
Marks are at least 0.5 ft to < 2 ft from surface or bottom of outlet	points = 3	
The wetland is a "headwater" wetland	points = 3	
Wetland is flat but has small depressions on the surface that trap water	points = 1	0
Marks of ponding less than 0.5 ft (6 in)	points = 0	

D 4.3. Contribution of the wetland to storage in the watershed: *Estimate the ratio of the area of upstream basin contributing surface water to the wetland to the area of the wetland unit itself.*

The area of the basin is less than 10 times the area of the unit	points = 5	
The area of the basin is 10 to 100 times the area of the unit (~ 29 times the area of the WL unit)	points = 3	3
The area of the basin is more than 100 times the area of the unit	points = 0	
Entire wetland is in the Flats class	points = 5	

Total for D 4	Add the points in the boxes above	5

Rating of Site Potential If score is: ___ **12-16 = H** ___ **6-11 = M** ✓ **0-5 = L** *Record the rating on the first page*

D 5.0. Does the landscape have the potential to support hydrologic functions of the site?

D 5.1. Does the wetland receive stormwater discharges?	Yes = 1 No = 0	1
D 5.2. Is >10% of the area within 150 ft of the wetland in land uses that generate excess runoff?	Yes = 1 No = 0	1
D 5.3. Is more than 25% of the contributing basin of the wetland covered with intensive human land uses (residential at >1 residence/ac, urban, commercial, agriculture, etc.)?	Yes = 1 No = 0	1
Total for D 5	Add the points in the boxes above	3

Rating of Landscape Potential If score is: ✓ **3 = H** ___ **1 or 2 = M** ___ **0 = L** *Record the rating on the first page*

D 6.0. Are the hydrologic functions provided by the site valuable to society?

D 6.1. The unit is in a landscape that has flooding problems. *Choose the description that best matches conditions around the wetland unit being rated. Do not add points. Choose the highest score if more than one condition is met.*

The wetland captures surface water that would otherwise flow down-gradient into areas where flooding has damaged human or natural resources (e.g., houses or salmon redds):

- Flooding occurs in a sub-basin that is immediately down-gradient of unit. points = 2
- Surface flooding problems are in a sub-basin farther down-gradient. points = 1

Flooding from groundwater is an issue in the sub-basin. points = 1

The existing or potential outflow from the wetland is so constrained by human or natural conditions that the water stored by the wetland cannot reach areas that flood. *Explain why* _____ points = 0

There are no problems with flooding downstream of the wetland. points = 0 — 0

D 6.2. Has the site been identified as important for flood storage or flood conveyance in a regional flood control plan? Yes = 2 No = 0 — 0

Total for D 6	Add the points in the boxes above	0

Rating of Value If score is: ___ **2-4 = H** ___ **1 = M** ✓ **0 = L** *Record the rating on the first page*

Wetland name or number _____

RIVERINE AND FRESHWATER TIDAL FRINGE WETLANDS

Water Quality Functions - Indicators that the site functions to improve water quality

R 1.0. Does the site have the potential to improve water quality?		
R 1.1. Area of surface depressions within the Riverine wetland that can trap sediments during a flooding event:		
Depressions cover >$^3/_4$ area of wetland	points = 8	
Depressions cover > ½ area of wetland	points = 4	
Depressions present but cover < ½ area of wetland	points = 2	
No depressions present	points = 0	
R 1.2. Structure of plants in the wetland (areas with >90% cover at person height, **not** Cowardin classes)		
Trees or shrubs > $^2/_3$ area of the wetland	points = 8	
Trees or shrubs > $^1/_3$ area of the wetland	points = 6	
Herbaceous plants (> 6 in high) > $^2/_3$ area of the wetland	points = 6	
Herbaceous plants (> 6 in high) > $^1/_3$ area of the wetland	points = 3	
Trees, shrubs, and ungrazed herbaceous < $^1/_3$ area of the wetland	points = 0	
Total for R 1	Add the points in the boxes above	

Rating of Site Potential If score is:___**12-16 = H** ___**6-11 = M** ___**0-5 = L** *Record the rating on the first page*

R 2.0. Does the landscape have the potential to support the water quality function of the site?		
R 2.1. Is the wetland within an incorporated city or within its UGA?	Yes = 2 No = 0	
R 2.2. Does the contributing basin to the wetland include a UGA or incorporated area?	Yes = 1 No = 0	
R 2.3. Does at least 10% of the contributing basin contain tilled fields, pastures, or forests that have been clearcut within the last 5 years?	Yes = 1 No = 0	
R 2.4. Is > 10% of the area within 150 ft of the wetland in land uses that generate pollutants?	Yes = 1 No = 0	
R 2.5. Are there other sources of pollutants coming into the wetland that are not listed in questions R 2.1-R 2.4 Other sources _____	Yes = 1 No = 0	
Total for R 2	Add the points in the boxes above	

Rating of Landscape Potential If score is:___**3-6 = H** ___**1 or 2 = M** ___**0 = L** *Record the rating on the first page*

R 3.0. Is the water quality improvement provided by the site valuable to society?		
R 3.1. Is the wetland along a stream or river that is on the 303(d) list or on a tributary that drains to one within 1 mi?	Yes = 1 No = 0	
R 3.2. Is the wetland along a stream or river that has TMDL limits for nutrients, toxics, or pathogens?	Yes = 1 No = 0	
R 3.3. Has the site been identified in a watershed or local plan as important for maintaining water quality? (*answer YES if there is a TMDL for the drainage in which the unit is found*)	Yes = 2 No = 0	
Total for R 3	Add the points in the boxes above	

Rating of Value If score is:___**2-4 = H** ___**1 = M** ___**0 = L** *Record the rating on the first page*

Wetland name or number ____

RIVERINE AND FRESHWATER TIDAL FRINGE WETLANDS

Hydrologic Functions - Indicators that site functions to reduce flooding and stream erosion

R 4.0. Does the site have the potential to reduce flooding and erosion?	
R 4.1. Characteristics of the overbank storage the wetland provides: *Estimate the average width of the wetland perpendicular to the direction of the flow and the width of the stream or river channel (distance between banks). Calculate the ratio: (average width of wetland)/(average width of stream between banks).* If the ratio is more than 20 points = 9 If the ratio is 10-20 points = 6 If the ratio is 5-<10 points = 4 If the ratio is 1-<5 points = 2 If the ratio is < 1 points = 1	
R 4.2. Characteristics of plants that slow down water velocities during floods: *Treat large woody debris as forest or shrub. Choose the points appropriate for the best description (polygons need to have >90% cover at person height. These are NOT Cowardin classes).* Forest or shrub for > $^1/_3$ area OR emergent plants > $^2/_3$ area points = 7 Forest or shrub for > $^1/_{10}$ area OR emergent plants > $^1/_3$ area points = 4 Plants do not meet above criteria points = 0	
Total for R 4 Add the points in the boxes above	

Rating of Site Potential If score is: **___12-16 = H ___6-11 = M ___0-5 = L** *Record the rating on the first page*

R 5.0. Does the landscape have the potential to support the hydrologic functions of the site?		
R 5.1. Is the stream or river adjacent to the wetland downcut?	Yes = 0 No = 1	
R 5.2. Does the up-gradient watershed include a UGA or incorporated area?	Yes = 1 No = 0	
R 5.3. Is the up-gradient stream or river controlled by dams?	Yes = 0 No = 1	
Total for R 5	Add the points in the boxes above	

Rating of Landscape Potential If score is: **___3 = H ___1 or 2 = M ___0 = L** *Record the rating on the first page*

R 6.0. Are the hydrologic functions provided by the site valuable to society?	
R 6.1. Distance to the nearest areas downstream that have flooding problems? *Choose the description that best fits the site.* The sub-basin immediately down-gradient of the wetland has flooding problems that result in damage to human or natural resources (e.g., houses or salmon redds) points = 2 Surface flooding problems are in a sub-basin farther down-gradient points = 1 No flooding problems anywhere downstream points = 0	
R 6.2. Has the site been identified as important for flood storage or flood conveyance in a regional flood control plan? Yes = 2 No = 0	
Total for R 6 Add the points in the boxes above	

Rating of Value If score is: **___2-4 = H ___1 = M ___0 = L** *Record the rating on the first page*

Wetland name or number _____

LAKE FRINGE WETLANDS

Water Quality Functions - Indicators that the site functions to improve water quality

L 1.0. Does the site have the potential to improve water quality?		
L 1.1. Average width of plants along the lakeshore *(use polygons of Cowardin classes)*:		
Plants are more than 33 ft (10 m) wide	points = 6	
Plants are more than 16 ft (5 m) wide and <33 ft	points = 3	
Plants are more than 6 ft (2 m) wide and <16 ft	points = 1	
Plants are less than 6 ft wide	points = 0	
L 1.2. Characteristics of the plants in the wetland: Choose the appropriate description that results in the highest points, and do not include any open water in your estimate of coverage. The herbaceous plants can be either the dominant form or as an understory in a shrub or forest community. *These are not Cowardin classes. Area of cover is total cover in the unit, but it can be in patches. Herbaceous does not include aquatic bed.*		
Cover of herbaceous plants is >90% of the vegetated area	points = 6	
Cover of herbaceous plants is $>^{2}/_{3}$ of the vegetated area	points = 4	
Cover of herbaceous plants is $>^{1}/_{3}$ of the vegetated area	points = 3	
Other plants that are not aquatic bed > $^{2}/_{3}$ unit	points = 3	
Other plants that are not aquatic bed in > $^{1}/_{3}$ vegetated area	points = 1	
Aquatic bed plants and open water cover > $^{2}/_{3}$ of the unit	points = 0	
Total for L 1	Add the points in the boxes above	

Rating of Site Potential If score is:___**8-12 = H** ___**4-7 = M** ___**0-3 = L** *Record the rating on the first page*

L 2.0. Does the landscape have the potential to support the water quality function of the site?		
L 2.1. Is the lake used by power boats?	Yes = 1 No = 0	
L 2.2. Is > 10% of the area within 150 ft of wetland unit on the upland side in land uses that generate pollutants?	Yes = 1 No = 0	
L 2.3. Does the lake have problems with algal blooms or excessive plant growth such as milfoil?	Yes = 1 No = 0	
Total for L 2	Add the points in the boxes above	

Rating of Landscape Potential: If score is:___**2 or 3 = H** ___**1 = M** ___**0 = L** *Record the rating on the first page*

L 3.0. Is the water quality improvement provided by the site valuable to society?		
L 3.1. Is the lake on the 303(d) list of degraded aquatic resources?	Yes = 1 No = 0	
L 3.2. Is the lake in a sub-basin where water quality is an issue (at least one aquatic resource in the basin is on the 303(d) list)?	Yes = 1 No = 0	
L 3.3. Has the site been identified in a watershed or local plan as important for maintaining water quality? *Answer YES if there is a TMDL for the lake or basin in which the unit is found.*	Yes = 2 No = 0	
Total for L 3	Add the points in the boxes above	

Rating of Value If score is:___**2-4 = H** ___**1 = M** ___**0 = L** *Record the rating on the first page*

Wetland name or number ____

LAKE FRINGE WETLANDS

Hydrologic Functions - Indicators that the wetland unit functions to reduce shoreline erosion

L 4.0. Does the site have the potential to reduce shoreline erosion?	
L 4.1. Distance along shore and average width of Cowardin classes along the lakeshore (**do not** include Aquatic bed): *Choose the highest scoring description that matches conditions in the wetland.*	
> ¾ of distance is Scrub-shrub or Forested at least 33 ft (10 m) wide — points = 6	
> ¾ of distance is Scrub-shrub or Forested at least 6 ft (2 m) wide — points = 4	
> ¼ distance is Scrub-shrub or Forested at least 33 ft (10 m) wide — points = 4	
Plants are at least 6 ft (2 m) wide (any type except Aquatic bed) — points = 2	
Plants are less than 6 ft (2 m) wide (any type except Aquatic bed) — points = 0	

Rating of Site Potential: If score is:___**6 = M** ___**0-5 = L** *Record the rating on the first page*

L 5.0. Does the landscape have the potential to support the hydrologic functions of the site?		
L 5.1. Is the lake used by power boats with more than 10 hp?	Yes = 1 No = 0	
L 5.2. Is the fetch on the lake side of the unit at least 1 mile in distance?	Yes = 1 No = 0	
Total for L 5	Add the points in the boxes above	

Rating of Landscape Potential If score is:___**2 = H** ___**1 = M** ___**0 = L** *Record the rating on the first page*

L 6.0. Are the hydrologic functions provided by the site valuable to society?	
L 6.1. Are there resources along the shore that can be impacted by erosion? If more than one resource is present, choose the one with the highest score.	
There are human structures or old growth/mature forests within 25 ft of OHWM of the shore in the unit — points = 2	
There are nature trails or other paths and recreational activities within 25 ft of OHWM — points = 1	
Other resources that could be impacted by erosion — points = 1	
There are no resources that can be impacted by erosion along the shores of the unit — points = 0	

Rating of Value: If score is:___**2 = H** ___**1 = M** ___**0 = L** *Record the rating on the first page*

NOTES and FIELD OBSERVATIONS:

Wetland name or number _____

SLOPE WETLANDS

Water Quality Functions - Indicators that the site functions to improve water quality

S 1.0. Does the site have the potential to improve water quality?	
S 1.1. Characteristics of the average slope of the wetland: *(a 1% slope has a 1 ft vertical drop in elevation for every 100 ft of horizontal distance)* Slope is 1% or less — points = 3 Slope is > 1%-2% — points = 2 Slope is > 2%-5% — points = 1 Slope is greater than 5% — points = 0	
S 1.2. The soil 2 in below the surface (or duff layer) is true clay or true organic *(use NRCS definitions)*: Yes = 3 No = 0	
S 1.3. Characteristics of the plants in the wetland that trap sediments and pollutants: Choose the points appropriate for the description that best fits the plants in the wetland. *Dense means you have trouble seeing the soil surface (>75% cover), and uncut means not grazed or mowed and plants are higher than 6 in.* Dense, uncut, herbaceous plants > 90% of the wetland area — points = 6 Dense, uncut, herbaceous plants > ½ of area — points = 3 Dense, woody, plants > ½ of area — points = 2 Dense, uncut, herbaceous plants > ¼ of area — points = 1 Does not meet any of the criteria above for plants — points = 0	
Total for S 1 — Add the points in the boxes above	

Rating of Site Potential If score is:___**12 = H** ___**6-11 = M** ___**0-5 = L** *Record the rating on the first page*

S 2.0. Does the landscape have the potential to support the water quality function of the site?	
S 2.1. Is > 10% of the area within 150 ft on the uphill side of the wetland in land uses that generate pollutants? Yes = 1 No = 0	
S 2.2. Are there other sources of pollutants coming into the wetland that are not listed in question S 2.1? Other sources _____ Yes = 1 No = 0	
Total for S 2 — Add the points in the boxes above	

Rating of Landscape Potential If score is:___**1-2 = M** ___**0 = L** *Record the rating on the first page*

S 3.0. Is the water quality improvement provided by the site valuable to society?	
S 3.1. Does the wetland discharge directly (i.e., within 1 mi) to a stream, river, lake, or marine water that is on the 303(d) list? Yes = 1 No = 0	
S 3.2. Is the wetland in a basin or sub-basin where water quality is an issue? *At least one aquatic resource in the basin is on the 303(d) list.* Yes = 1 No = 0	
S 3.3. Has the site been identified in a watershed or local plan as important for maintaining water quality? *Answer YES if there is a TMDL for the basin in which unit is found.* Yes = 2 No = 0	
Total for S 3 — Add the points in the boxes above	

Rating of Value If score is:___**2-4 = H** ___**1 = M** ___**0 = L** *Record the rating on the first page*

Wetland name or number ____

SLOPE WETLANDS

Hydrologic Functions - Indicators that the site functions to reduce flooding and stream erosion

S 4.0. Does the site have the potential to reduce flooding and stream erosion?	
S 4.1. Characteristics of plants that reduce the velocity of surface flows during storms: Choose the points appropriate for the description that best fits conditions in the wetland. *Stems of plants should be thick enough (usually > 1/8 in), or dense enough, to remain erect during surface flows.* Dense, uncut, **rigid** plants cover > 90% of the area of the wetland — points = 1 All other conditions — points = 0	

Rating of Site Potential If score is:___**1 = M** ___**0 = L** *Record the rating on the first page*

S 5.0. Does the landscape have the potential to support the hydrologic functions of the site?	
S 5.1. Is more than 25% of the area within 150 ft upslope of wetland in land uses or cover that generate excess surface runoff? Yes = 1 No = 0	

Rating of Landscape Potential If score is:___**1 = M** ___**0 = L** *Record the rating on the first page*

S 6.0. Are the hydrologic functions provided by the site valuable to society?	
S 6.1. Distance to the nearest areas downstream that have flooding problems: The sub-basin immediately down-gradient of site has flooding problems that result in damage to human or natural resources (e.g., houses or salmon redds) — points = 2 Surface flooding problems are in a sub-basin farther down-gradient — points = 1 No flooding problems anywhere downstream — points = 0	
S 6.2. Has the site been identified as important for flood storage or flood conveyance in a regional flood control plan? Yes = 2 No = 0	
Total for S 6 — Add the points in the boxes above	

Rating of Value If score is:___**2-4 = H** ___**1 = M** ___**0 = L** *Record the rating on the first page*

NOTES and FIELD OBSERVATIONS:

Wetland name or number WL 1

These questions apply to wetlands of all HGM classes.

HABITAT FUNCTIONS - Indicators that site functions to provide important habitat

H 1.0. Does the site have the potential to provide habitat?

H 1.1. Structure of plant community: *Indicators are Cowardin classes and strata within the Forested class.* Check the Cowardin plant classes in the wetland. *Up to 10 patches may be combined for each class to meet the threshold of ¼ ac or more than 10% of the unit if it is smaller than 2.5 ac. Add the number of structures checked.*

- ___ Aquatic bed
- ___√ Emergent
- ___ Scrub-shrub (areas where shrubs have > 30% cover)
- ___ Forested (areas where trees have > 30% cover)

4 structures or more: points = 4
3 structures: points = 2
2 structures: points = 1
1 structure: points = 0

If the unit has a Forested class, check if:

- ___ The Forested class has 3 out of 5 strata (canopy, sub-canopy, shrubs, herbaceous, moss/ground-cover) that each cover 20% within the Forested polygon

0

H 1.2. Hydroperiods

Check the types of water regimes (hydroperiods) present within the wetland. The water regime has to cover more than 10% of the wetland or ¼ ac to count (*see text for descriptions of hydroperiods*).

- ___ Permanently flooded or inundated
- ___√ Seasonally flooded or inundated
- ___ Occasionally flooded or inundated
- ___√ Saturated only
- ___ Permanently flowing stream or river in, or adjacent to, the wetland
- ___ Seasonally flowing stream in, or adjacent to, the wetland
- ___ **Lake Fringe wetland** **2 points**
- ___ **Freshwater tidal wetland** **2 points**

4 or more types present: points = 3
3 types present: points = 2
2 types present: points = 1
1 type present: points = 0

1

H 1.3. Richness of plant species

Count the number of plant species in the wetland that cover at least 10 ft^2.

Different patches of the same species can be combined to meet the size threshold and you do not have to name the species. ***Do not include Eurasian milfoil, reed canarygrass, purple loosestrife, Canadian thistle***

If you counted: > 19 species — points = 2
5 - 19 species — points = 1
< 5 species — points = 0

Populus
Poa
Iris
Juncus effusus

1

H 1.4. Interspersion of habitats

Jun sp

Decide from the diagrams below whether interspersion among Cowardin plants classes (described in H 1.1), or the classes and unvegetated areas (can include open water or mudflats) is high, moderate, low, or none. *If you have four or more plant classes or three classes and open water, the rating is always high.*

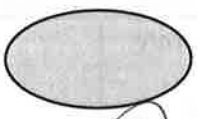

None = 0 points

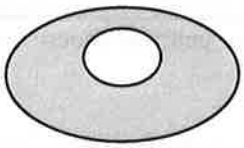

Low = 1 point

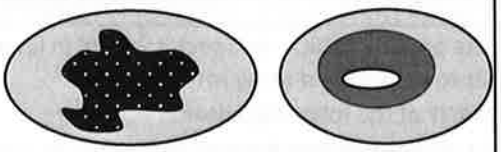

Moderate = 2 points

All three diagrams in this row are **HIGH** = 3points

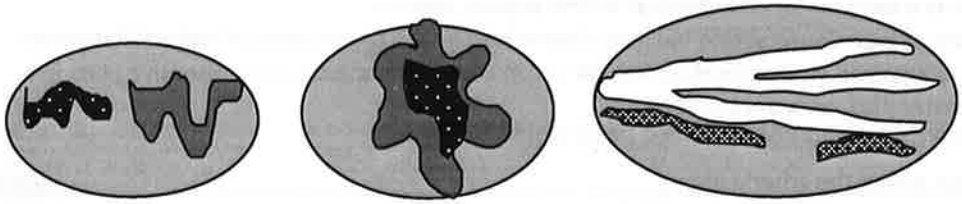

0

Wetland name or number WL1

H 1.5. Special habitat features: Check the habitat features that are present in the wetland. *The number of checks is the number of points.* N Large, downed, woody debris within the wetland (> 4 in diameter and 6 ft long). N Standing snags (dbh > 4 in) within the wetland N Undercut banks are present for at least 6.6 ft (2 m) **and/or** overhanging plants extends at least 3.3 ft (1 m) over a stream (or ditch) in, or contiguous with the wetland, for at least 33 ft (10 m) N Stable steep banks of fine material that might be used by beaver or muskrat for denning (> 30 degree slope) OR signs of recent beaver activity are present *(cut shrubs or trees that have not yet weathered where wood is exposed)* N At least ¼ ac of thin-stemmed persistent plants or woody branches are present in areas that are permanently or seasonally inundated *(structures for egg-laying by amphibians)* N Invasive plants cover less than 25% of the wetland area in every stratum of plants (*see H 1.1 for list of strata*) PHAR dominant	0
Total for H 1 Add the points in the boxes above	0

Rating of Site Potential If score is: ___ **15-18 = H** ___ **7-14 = M** X **0-6 = L** *Record the rating on the first page*

H 2.0. Does the landscape have the potential to support the habitat functions of the site?	
H 2.1. Accessible habitat (include *only habitat that directly abuts wetland unit*). *Calculate:* 0.1 % undisturbed habitat 0.1 + [(% moderate and low intensity land uses)/2] 0 = 0.1 % If total accessible habitat is: > 1/3 (33.3%) of 1 km Polygon points = 3 20-33% of 1 km Polygon ↳ 802 ac points = 2 10-19% of 1 km Polygon points = 1 < 10% of 1 km Polygon points = 0	0
H 2.2. Undisturbed habitat in 1 km Polygon around the wetland. *Calculate:* % undisturbed habitat 2.4 + [(% moderate and low intensity land uses)/2] 0.7 = 3.1 % Undisturbed habitat > 50% of Polygon 19 ac/802 = 2.4% 1.4%/2 = 0.7 points = 3 Undisturbed habitat 10-50% and in 1-3 patches points = 2 Undisturbed habitat 10-50% and > 3 patches points = 1 Undisturbed habitat < 10% of 1 km Polygon points = 0	0
H 2.3. Land use intensity in 1 km Polygon: If > 50% of 1 km Polygon is high intensity land use points = (- 2) ≤ 50% of 1 km Polygon is high intensity points = 0	-2
Total for H 2 Add the points in the boxes above	-2

Rating of Landscape Potential If score is: ___ **4-6 = H** ___ **1-3 = M** X **< 1 = L** *Record the rating on the first page*

H 3.0. Is the habitat provided by the site valuable to society?	
H 3.1. Does the site provide habitat for species valued in laws, regulations, or policies? *Choose only the highest score that applies to the wetland being rated.* Site meets ANY of the following criteria: points = 2 N It has 3 or more priority habitats within 100 m (see next page) Lake Bellevue >100m away N It provides habitat for Threatened or Endangered species (any plant or animal on the state or federal lists) N It is mapped as a location for an individual WDFW priority species N It is a Wetland of High Conservation Value as determined by the Department of Natural Resources — It has been categorized as an important habitat site in a local or regional comprehensive plan, in a Shoreline Master Plan, or in a watershed plan Site has 1 or 2 priority habitats (listed on next page) within 100 m points = 1 Site does not meet any of the criteria above points = 0	0

Rating of Value If score is: ___ **2 = H** ___ **1 = M** X **0 = L** *Record the rating on the first page*

Wetland name or number WM

WDFW Priority Habitats

Priority habitats listed by WDFW (see complete descriptions of WDFW priority habitats, and the counties in which they can be found, in: Washington Department of Fish and Wildlife. 2008. Priority Habitat and Species List. Olympia, Washington. 177 pp. http://wdfw.wa.gov/publications/00165/wdfw00165.pdf or access the list from here: http://wdfw.wa.gov/conservation/phs/list/)

Count how many of the following priority habitats are within 330 ft (100 m) of the wetland unit: ***NOTE:*** *This question is independent of the land use between the wetland unit and the priority habitat.*

— **Aspen Stands:** Pure or mixed stands of aspen greater than 1 ac (0.4 ha).

— **Biodiversity Areas and Corridors**: Areas of habitat that are relatively important to various species of native fish and wildlife (*full descriptions in WDFW PHS report*).

— **Herbaceous Balds:** Variable size patches of grass and forbs on shallow soils over bedrock.

— **Old-growth/Mature forests:** Old-growth west of Cascade crest – Stands of at least 2 tree species, forming a multi-layered canopy with occasional small openings; with at least 8 trees/ac (20 trees/ha) > 32 in (81 cm) dbh or > 200 years of age. Mature forests – Stands with average diameters exceeding 21 in (53 cm) dbh; crown cover may be less than 100%; decay, decadence, numbers of snags, and quantity of large downed material is generally less than that found in old-growth; 80-200 years old west of the Cascade crest.

— **Oregon White Oak:** Woodland stands of pure oak or oak/conifer associations where canopy coverage of the oak component is important (*full descriptions in WDFW PHS report p. 158 – see web link above*).

— **Riparian**: The area adjacent to aquatic systems with flowing water that contains elements of both aquatic and terrestrial ecosystems which mutually influence each other.

— **Westside Prairies:** Herbaceous, non-forested plant communities that can either take the form of a dry prairie or a wet prairie (*full descriptions in WDFW PHS report p. 161 – see web link above*).

— **Instream:** The combination of physical, biological, and chemical processes and conditions that interact to provide functional life history requirements for instream fish and wildlife resources.

— **Nearshore**: Relatively undisturbed nearshore habitats. These include Coastal Nearshore, Open Coast Nearshore, and Puget Sound Nearshore. (*full descriptions of habitats and the definition of relatively undisturbed are in WDFW report – see web link on previous page).*

— **Caves:** A naturally occurring cavity, recess, void, or system of interconnected passages under the earth in soils, rock, ice, or other geological formations and is large enough to contain a human.

— **Cliffs:** Greater than 25 ft (7.6 m) high and occurring below 5000 ft elevation.

— **Talus:** Homogenous areas of rock rubble ranging in average size 0.5 - 6.5 ft (0.15 - 2.0 m), composed of basalt, andesite, and/or sedimentary rock, including riprap slides and mine tailings. May be associated with cliffs.

— **Snags and Logs:** Trees are considered snags if they are dead or dying and exhibit sufficient decay characteristics to enable cavity excavation/use by wildlife. Priority snags have a diameter at breast height of > 20 in (51 cm) in western Washington and are > 6.5 ft (2 m) in height. Priority logs are > 12 in (30 cm) in diameter at the largest end, and > 20 ft (6 m) long.

Note: All vegetated wetlands are by definition a priority habitat but are not included in this list because they are addressed elsewhere.

Wetland name or number 1

CATEGORIZATION BASED ON SPECIAL CHARACTERISTICS

Wetland Type *Check off any criteria that apply to the wetland. Circle the category when the appropriate criteria are met.*	Category
SC 1.0. Estuarine wetlands Does the wetland meet the following criteria for Estuarine wetlands? — The dominant water regime is tidal, — Vegetated, and — With a salinity greater than 0.5 ppt Yes –Go to **SC 1.1** (No) **Not an estuarine wetland**	
SC 1.1. Is the wetland within a National Wildlife Refuge, National Park, National Estuary Reserve, Natural Area Preserve, State Park or Educational, Environmental, or Scientific Reserve designated under WAC 332-30-151? Yes = **Category I** (No - Go to **SC 1.2**	**Cat. I**
SC 1.2. Is the wetland unit at least 1 ac in size and meets at least two of the following three conditions? — The wetland is relatively undisturbed (has no diking, ditching, filling, cultivation, grazing, and has less than 10% cover of non-native plant species. (If non-native species are *Spartina*, see page 25) — At least ¾ of the landward edge of the wetland has a 100 ft buffer of shrub, forest, or un-grazed or un-mowed grassland. — The wetland has at least two of the following features: tidal channels, depressions with open water, or contiguous freshwater wetlands. Yes = **Category I** No = **Category II**	**Cat. I** **Cat. II**
SC 2.0. Wetlands of High Conservation Value (WHCV) SC 2.1. Has the WA Department of Natural Resources updated their website to include the list of Wetlands of High Conservation Value? Yes – Go to **SC 2.2** (No) – Go to **SC 2.3** SC 2.2. Is the wetland listed on the WDNR database as a Wetland of High Conservation Value? Yes = **Category I** (No) = **Not a WHCV** SC 2.3. Is the wetland in a Section/Township/Range that contains a Natural Heritage wetland? http://www1.dnr.wa.gov/nhp/refdesk/datasearch/wnhpwetlands.pdf Yes **– Contact WNHP/WDNR and go to SC 2.4** No **= Not a WHCV** SC 2.4. Has WDNR identified the wetland within the S/T/R as a Wetland of High Conservation Value and listed it on their website? Yes = **Category I** No = **Not a WHCV**	**Cat. I**
SC 3.0. Bogs Does the wetland (or any part of the unit) meet both the criteria for soils and vegetation in bogs? *Use the key below.* ***If you answer YES you will still need to rate the wetland based on its functions.*** SC 3.1. Does an area within the wetland unit have organic soil horizons, either peats or mucks, that compose 16 in or more of the first 32 in of the soil profile? Yes – Go to **SC 3.3** (No) – Go to **SC 3.2** SC 3.2. Does an area within the wetland unit have organic soils, either peats or mucks, that are less than 16 in deep over bedrock, or an impermeable hardpan such as clay or volcanic ash, or that are floating on top of a lake or pond? Yes – Go to **SC 3.3** (No) = **Is not a bog** SC 3.3. Does an area with peats or mucks have more than 70% cover of mosses at ground level, AND at least a 30% cover of plant species listed in Table 4? Yes = **Is a Category I bog** No – Go to **SC 3.4** **NOTE:** If you are uncertain about the extent of mosses in the understory, you may substitute that criterion by measuring the pH of the water that seeps into a hole dug at least 16 in deep. If the pH is less than 5.0 and the plant species in Table 4 are present, the wetland is a bog. SC 3.4. Is an area with peats or mucks forested (> 30% cover) with Sitka spruce, subalpine fir, western red cedar, western hemlock, lodgepole pine, quaking aspen, Engelmann spruce, or western white pine, AND any of the species (or combination of species) listed in Table 4 provide more than 30% of the cover under the canopy? Yes = **Is a Category I bog** No = **Is not a bog**	**Cat. I**

Wetland name or number 1

SC 4.0. Forested Wetlands Does the wetland have at least 1 contiguous acre of forest that meets one of these criteria for the WA Department of Fish and Wildlife's forests as priority habitats? ***If you answer YES you will still need to rate the wetland based on its functions.*** — **Old-growth forests** (west of Cascade crest): Stands of at least two tree species, forming a multi-layered canopy with occasional small openings; with at least 8 trees/ac (20 trees/ha) that are at least 200 years of age OR have a diameter at breast height (dbh) of 32 in (81 cm) or more. — **Mature forests** (west of the Cascade Crest): Stands where the largest trees are 80- 200 years old OR the species that make up the canopy have an average diameter (dbh) exceeding 21 in (53 cm). Yes = **Category I** (No) = **Not a forested wetland for this section**	**Cat. I**
SC 5.0. Wetlands in Coastal Lagoons Does the wetland meet all of the following criteria of a wetland in a coastal lagoon? — The wetland lies in a depression adjacent to marine waters that is wholly or partially separated from marine waters by sandbanks, gravel banks, shingle, or, less frequently, rocks — The lagoon in which the wetland is located contains ponded water that is saline or brackish (> 0.5 ppt) during most of the year in at least a portion of the lagoon *(needs to be measured near the bottom)* Yes – Go to **SC 5.1** (No) = **Not a wetland in a coastal lagoon** SC 5.1. Does the wetland meet all of the following three conditions? — The wetland is relatively undisturbed (has no diking, ditching, filling, cultivation, grazing), and has less than 20% cover of aggressive, opportunistic plant species (see list of species on p. 100). — At least ¾ of the landward edge of the wetland has a 100 ft buffer of shrub, forest, or un-grazed or un-mowed grassland. — The wetland is larger than $^{1}/_{10}$ ac (4350 ft^2) Yes = **Category I** No = **Category II**	**Cat. I** **Cat. II**
SC 6.0. Interdunal Wetlands Is the wetland west of the 1889 line (also called the Western Boundary of Upland Ownership or WBUO)? ***If you answer yes you will still need to rate the wetland based on its habitat functions.*** In practical terms that means the following geographic areas: — Long Beach Peninsula: Lands west of SR 103 — Grayland-Westport: Lands west of SR 105 — Ocean Shores-Copalis: Lands west of SR 115 and SR 109 Yes – Go to **SC 6.1** (No) = **not an interdunal wetland for rating** SC 6.1. Is the wetland 1 ac or larger and scores an 8 or 9 for the habitat functions on the form (rates H,H,H or H,H,M for the three aspects of function)? Yes = **Category I** No – Go to **SC 6.2** SC 6.2. Is the wetland 1 ac or larger, or is it in a mosaic of wetlands that is 1 ac or larger? Yes = **Category II** No – Go to **SC 6.3** SC 6.3. Is the unit between 0.1 and 1 ac, or is it in a mosaic of wetlands that is between 0.1 and 1 ac? Yes = **Category III** No = **Category IV**	**Cat I** **Cat. II** **Cat. III** **Cat. IV**
Category of wetland based on Special Characteristics If you answered No for all types, enter "Not Applicable" on Summary Form	N/A

Wetland name or number ____

This page left blank intentionally

6/16 Bellevue site visit

~~SHA~~ Scott willows 2 clumps
1 w/ 8
2 w/ 2

Veg on steep slope

HEHE
OELE
Holly
Oen spring

S of pump station
ACMA
PSME w/ OELE & HEHE
POBA

N of pump station

MAD rive
PSME x2
OR grape
Oen spring

~~Veg~~ on top of slope
Salal, oensp
SYAL

DATA SOURCE: Street, Stream, and Lake - City of Bellevue (2015), Aerial - ESRI Online (2015)

0 20 40 Feet

LEGEND

- PEM
- Wetland Assessment Unit
- Ditch

FIGURE D1
COWARDIN CLASS

DATA SOURCE: Street, Stream, and Lake - City of Bellevue (2015), Aerial - ESRI Online (2015)

0 20 40 Feet

LEGEND

- Seasonally Inundated
- Saturated Only
- Wetland Assessment Unit
- Ditch

FIGURE D2
HYDROPERIODS

PATH: G:\PROJECTS\WASHINGTON\CITY_OF_BELLEVUE_007257\SPRING_BLVD_257582\MAP_DOCS\ENVIRONMENTAL\WETLAND_RATING\HYDROPERIO.MXD - USER: MDALZELL - DATE: 9/9/2015

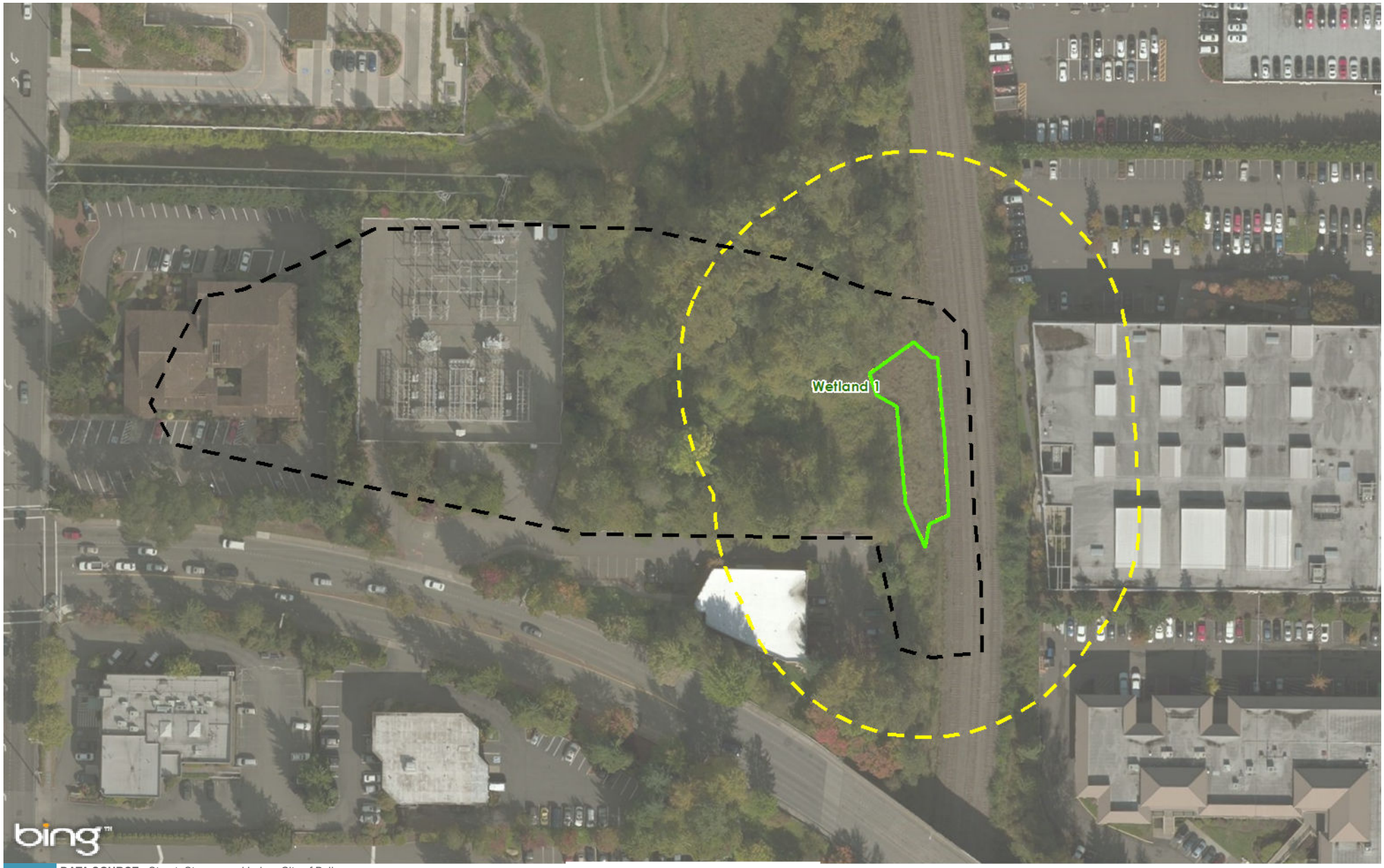

DATA SOURCE: Street, Stream, and Lake - City of Bellevue (2015), Aerial - ESRI Online (2015)

0 50 100 Feet

LEGEND

- 150-foot Buffer
- Contributing Basin
- Wetland Assessment Unit

FIGURE D3
150-FOOT BUFFER AND CONTRIBUTING BASIN

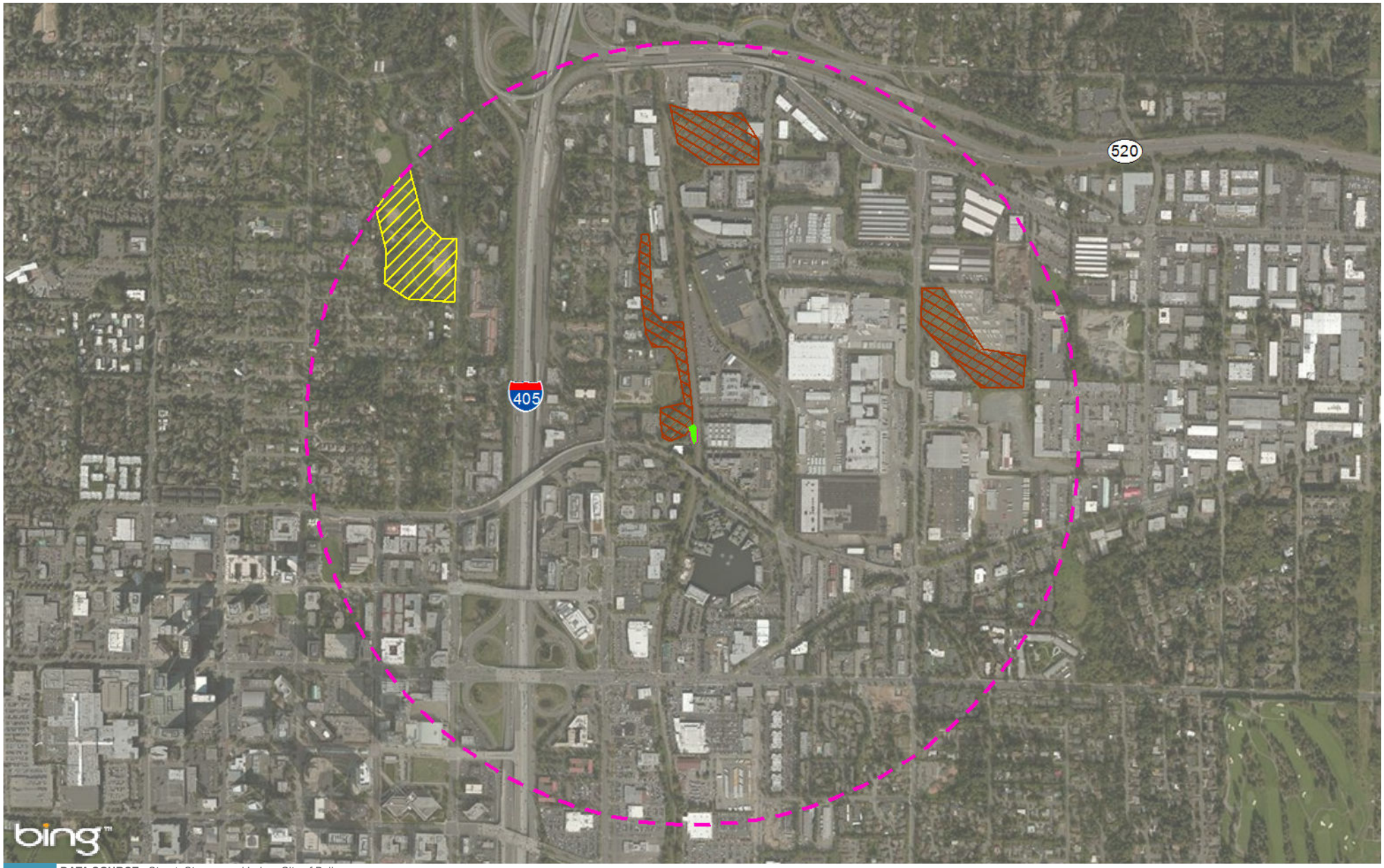

DATA SOURCE: Street, Stream, and Lake - City of Bellevue (2015), Aerial - ESRI Online (2015)

0 500 1,000 Feet

LEGEND

- Modrate/Low Intensity Land Use
- Undisturbed Habitat
- 1-kilometer Buffer
- Wetland Assessment Unit

FIGURE D4
1-KILOMETER BUFFER

PATH: G:\PROJECTS\WASHINGTON\CITY_OF_BELLEVUE_007257\SPRING_BLVD_257582\MAP_DOCS\ENVIRONMENTAL\WETLAND_RATING\1KM_BUFFER.MXD - USER: MDALZELL - DATE: 9/8/2015