DEVELOPMENT SERVICES DEPARTMENT
ENVIRONMENTAL COORDINATOR
450 110th Ave NE., P.O. BOX 90012
BELLEVUE, WA 98009-9012

OPTIONAL DETERMINATION OF NON-SIGNIFICANCE (DNS) NOTICE MATERIALS

The attached materials are being sent to you pursuant to the requirements for the Optional DNS Process (WAC 197-11-355). A DNS on the attached proposal is likely. This may be the only opportunity to comment on environmental impacts of the proposal. Mitigation measures from standard codes will apply. Project review may require mitigation regardless of whether an EIS is prepared. A copy of the subsequent threshold determination for this proposal may be obtained upon request.

File No. 15-122640-LO

Project Name/Address: Kelsey Creek Detention Pond Wetland Restoration

Planner: Reilly Pittman

Phone Number: 425-452-4350

Minimum Comment Period: November 12, 2015

Materials included in this Notice:

- ☒ Blue Bulletin
- ☒ Checklist
- ☒ Vicinity Map
- ☒ Plans
- ☐ Other:

OTHERS TO RECEIVE THIS DOCUMENT:

☒ State Department of Fish and Wildlife / Sterwart.Reinbold@dfw.gov; Christa.Heller@dfw.wa.gov;
☒ State Department of Ecology, Shoreline Planner N.W. Region / Jobu461@ecy.wa.gov; sepaunit@ecy.wa.gov
☒ Army Corps of Engineers Susan.M.Powell@nws02.usace.army.mil
☒ Attorney General ecyolyef@atg.wa.gov
☒ Muckleshoot Indian Tribe Karen.Walter@muckleshoot.nsn.us; Fisheries.fileroom@muckleshoot.nsn.us

N

Parametrix

West Tributary Kelsey Creek DMP 165 Wetland Restoration Project
City of Bellevue
Figure 1-1. Vicinity Map

ENVIRONMENTAL CHECKLIST

10/9/2009

Thank you in advance for your cooperation and adherence to these procedures. If you need assistance in completing the checklist or have any questions regarding the environmental review process, please visit or call Development Services (425-452-6800) between 8 a.m. and 4 p.m., Monday through Friday (Wednesday, 10 to 4). Assistance for the hearing impaired: Dial 711 (Telecommunications Relay Service).

INTRODUCTION

Purpose of the Checklist:

The State Environmental Policy Act (SEPA), Chapter 43.21c RCW, requires all governmental agencies to consider the environmental impacts of a proposal before making decisions. An environmental impact statement (EIS) must be prepared for all proposals with probable significant adverse impacts on the quality of the environment. The purpose of this checklist is to provide information to help you and the City of Bellevue identify impacts from your proposal (and to reduce or avoid impacts from the proposal, if it can be done) and to help the City decide whether an EIS is required.

Instructions for Applicants:

This environmental checklist asks you to describe some basic information about your proposal. Answer the questions briefly, with the most precise information known, or give the best description you can. You must answer each question accurately and carefully, to the best of your knowledge. In most cases, you should be able to answer the questions from your own observations or project plans without the need to hire experts. If you really do not know the answer or if a question does not apply to your proposal, write "do not know" or "does not apply." Giving complete answers to the questions now may avoid unnecessary delays later.

Some questions ask about governmental regulations such as zoning, shoreline, and landmark designations. Answer these questions if you can. If you have problems, the Planner in the Permit Center can assist you.

The checklist questions apply to all parts of your proposal, even if you plan to do them over a period of time or on different parcels of land. Attach any additional information that will help describe your proposal or its environmental effects. Include reference to any reports on studies that you are aware of which are relevant to the answers you provide. The City may ask you to explain your answers or provide additional information reasonably related to determining if there may be significant adverse impacts.

Use of a Checklist for Nonproject Proposals: *A nonproject proposal includes plans, policies, and programs where actions are different or broader than a single site-specific proposal.*

For nonproject proposals, complete the Environmental Checklist even though you may answer "does not apply" to most questions. In addition, complete the Supplemental Sheet for Nonproject Actions available from Permit Processing.

For nonproject actions, the references in the checklist to the words *project*, *applicant*, and *property* or *site* should be read as *proposal*, *proposer*, and *affected geographic area*, respectively.

Attach an 8 ½" x 11 vicinity map which accurately locates the proposed site.

RP

BACKGROUND INFORMATION

Property Owner: City of Bellevue

Proponent: City of Bellevue

Contact Person: Abe Santos
(If different from the owner. All questions and correspondence will be directed to the individual listed.)

Address: 450 110th Avenue NE
Bellevue, WA 98009

Phone: (425) 452-6456

Proposal Title: West Tributary Kelsey Creek DMP 165 Restoration Project

Proposal Location: The project is located at 1770-124th Avenue NE, Bellevue, WA
(Street address and nearest cross street or intersection) Provide a legal description if available.
(Section 28, Township 25 North, Range 05 East).(Figure 1-1)
Please attach an 8 ½" x 11" vicinity map that accurately locates the proposal site.

Give an accurate, brief description of the proposal's scope and nature:

1. General description: The proposed project is a wetland restoration project within the West Tributary Detention Pond located at 1770-124th Avenue NE, Bellevue, Washington (Figure 1-1). The project is located in Section 28, Township 25 North, Range 5 East. It will include restoration of wetlands adjacent to the West Tributary of Kelsey Creek in the northern portion of the site. The restoration will be integrated into the regional detention facility while partially incorporating the long-range vision for the site from the perpective of the overall redevelopment of the Bel-Red corridor.
2. Acreage of site: 7 acres
3. Number of dwelling units/buildings to be demolished: 0
4. Number of dwelling units/buildings to be constructed: 0
5. Square footage of buildings to be demolished: Not applicable
6. Square footage of buildings to be constructed: Not applicable
7. Quantity of earth movement (in cubic yards): 0
8. Proposed land use: Wetland Restoration
9. Design features, including building height, number of stories and proposed exterior materials:
   Not applicable
10. Other

Estimated date of completion of the proposal or timing of phasing:

Summer 2016

Do you have any plans for future additions, expansion, or further activity related to or connected with this proposal? If yes, explain.

No

List any environmental information you know about that has been prepared, or will be prepared, directly related to this proposal.

- Critical Areas Report
- Habitat Assessment Report
- Restoration Plans

Do you know whether applications are pending for governmental approvals of other proposals directly affecting the property covered by your proposal? If yes, explain. List dates applied for and file numbers, if known.

No

List any government approvals or permits that will be needed for your proposal, if known. If permits have been applied for, list application date and file numbers, if known.

Hydraulic Project Approval, City of Bellevue Critical Areas Land Use Permit

Please provide one or more of the following exhibits, if applicable to your proposal.
(Please check appropriate box(es) for exhibits submitted with your proposal):

☐ Land Use Reclassification (rezone) Map of existing and proposed zoning

☐ Preliminary Plat or Planned Unit Development
Preliminary plat map

☐ Clearing & Grading Permit
Plan of existing and proposed grading
Development plans

Project will require a clearing and grading permit

☐ Building Permit (or Design Review)
Site plan
Clearing & grading plan

☐ Shoreline Management Permit
Site plan

A. ENVIRONMENTAL ELEMENTS

1. Earth

a. General description of the site: ☑ Flat ☐ Rolling ☐ Hilly ☑ Steep slopes ☐ Mountains ☐ Other

b. What is the steepest slope on the site (approximate percent slope)? 65 percent

c. What general types of soil are found on the site (for example, clay, sand, gravel, peat, and muck)? If you know the classification of agricultural soils, specify them and note any prime farmland.

Loamy soils and muck are found on the site.

d. Are there surface indications or history of unstable soils in the immediate vicinity? If so, describe.

There are no known indications or history of unstable soils in the immediate vicinity of the project area.

e. Describe the purpose, type, and approximate quantities of any filling or grading proposed. Indicate source of fill.

No fill or grading will be performed on site nor in wetlands for the project. The restoration project would be constructed using hand tools with minimal use of mechanized equipment such as chain saws. The proposed project would not require any fill.

f. Could erosion occur as a result of clearing, construction, or use? If so, generally describe.

Yes. An erosion control plan will be prepared in accordance with the City of Bellevue's standards and BMPs.

g. About what percent of the site will be covered with impervious surfaces after project construction (for example, asphalt or buildings)?

There will be no impervious surfaces resulting from the project.

h. Proposed measures to reduce or control erosion, or other impacts to the earth, if any:

An erosion control plan will be prepared in accordance with City of Bellevue standards and best management practices, and construction timing, erosion control fencing, and other devices and methods will be employed to ensure erosion potential is minimized.

2. AIR

a. What types of emissions to the air would result from the proposal (i.e. dust, automobile odors, and industrial wood smoke) during construction and when the project is completed? If any, generally describe and give approximate quantities if known.

During construction, emissions to the air will be released by small-sized equipment (e.g.; chainsaws). Following construction, there would not be emissions produced as a result of the project

b. Are there any off-site sources of emissions or odor that may affect your proposal? If so, generally describe.

There are no known off-site sources of emissions or odor that would affect this proposal.

c. Proposed measures to reduce or control emissions or other impacts to the air, if any:

Construction vehicles will be fitted with required, factory-installed emission control devices. To reduce the potential of dust, construction accesses and staging areas will be covered with rock or aggregate. Dust emissions will also be reduced during construction through the use of spray water as necessary during dry weather conditions. Material stockpiles will also be covered or watered as necessary to control dust.

3. WATER

a. Surface

(1) Is there any surface water body on or in the immediate vicinity of the site (including year-round and seasonal streams, saltwater, lakes, ponds, wetlands)? If yes, describe type and provide names. If appropriate, state what stream or river it flows into.

Yes. Wetland 1 and West Tributary Kelsey Creek are on the project site. In addition, a small open water area occurs in Wetland 1 within the southeast portion of the site.

(2) Will the project require any work over, in, or adjacent to (within 200 feet) the described waters? If Yes, please describe and attach available plans.

Yes. The wetland restoration project will occur in Wetland 1 and within 200 feet of West Tributary Kelsey Creek.

(3) Estimate the amount of fill and dredge material that would be placed in or removed from surface water or wetlands and indicate the area of the site that would be affected. Indicate the source of fill material.

No fill will be used on the proposed project.

(4) Will the proposal require surface water withdrawals or diversions? Give general description, purpose, and approximate quantities if known.

No surface water withdrawals or diversions are anticipated.

(5) Does the proposal lie within a 100-year floodplain? If so, note location on the site plan.

No. The proposal is not within a 100-year floodplain.

(6) Does the proposal involve any discharges of waste materials to surface waters? If so, describe the type of waste and anticipated volume of discharge.

The proposal does not involve any discharges of waste materials to surface waters.

b. Ground

(1) Will ground water be withdrawn, or will water be discharged to ground water? Give general description.

The proposal does not involve withdrawals of groundwater or discharges to groundwater.

(2) Describe waste material that will be discharged into the ground from septic tanks or other sources, if any (for example: Domestic sewage; industrial, containing the following chemicals...; agricultural; etc.) Describe the general size of the system, the number of such systems, the number of houses to be served (if applicable), or the number of animals or humans the system(s) are expected to serve.

No waste materials will be discharged into the ground from septic tanks or other sources.

c. Water Runoff (Including storm water)

(1) Describe the source of runoff (including storm water) and method of collection and disposal, if any (include quantities, if known). Where will this water flow? Will this water flow into other waters? If so, describe.

No runoff will enter nearby waters or infiltrate into the ground as a result of the restoration project. Water may be redirected to some extent, but will flow into the same waters as occurs with existing conditions.

(2) Could waste materials enter ground or surface waters? If so, generally describe.

Waste materials will enter ground or surface waters as a result of this proposal.

d. Proposed measures to reduce or control surface, ground, and runoff water impacts, if any:

Construction contractors will be required to install temporary erosion control measures prior to and during the restoration project. Spill Prevention Control and Countermeasure plans will be implemented during construction, and a Stormwater Pollution Prevention Plan (SWPPP) will be developed and implemented.

4. Plants

a. Check or circle types of vegetation found on the site:

- [x] deciduous tree: alder, maple, aspen, other
- [x] evergreen tree: fir, cedar, pine, other
- [x] shrubs
- [x] grass
- [ ] pasture
- [ ] crop or grain
- [x] wet soil plants: cattail, buttercup, bulrush, skunk cabbage, other
- [ ] water plants: water lily, eelgrass, milfoil, other
- [ ] other types of vegetation

b. What kind and amount of vegetation will be removed or altered?

Only small areas of reed canarygrass will be treated prior to installation of mitigation plantings.

c. List threatened or endangered species known to be on or near the site.

There are no threatened or endangered species known to be on or near the site.

d. Proposed landscaping, use of native plants, or other measures to preserve or enhance vegetation on the site, if any:

Native plant materials will be installed in restored areas.

5. ANIMALS

a. Check or circle any birds and animals which have been observed on or near the site or are known to be on or near the site:

- [x] Birds: hawk, heron, eagle, songbirds, other:
- [x] Mammals: deer, bear, elk, beaver, other:
- [x] Fish: bass, salmon, trout, herring, shellfish, other:

The West Tributary is a Type-F stream but Chinook (Threatened) and Coho are found south of Bel-Red Rd and have been documented as not being able to access north of Bel-Red Rd due to man-made obstructions.

b. List any threatened or endangered species known to be on or near the site.

There are no threatened or endangered species known to be on or near the site.

c. Is the site part of a migration route? If so, explain.

Most of Western Washington is generally located in the Pacific Flyway.

d. Proposed measures to preserve or enhance wildlife, if any:

The wetland restoration portion of the project is intended to increase biodiversity and wildlife habitat functions.

6. Energy and Natural Resources

a. What kinds of energy (electric, natural gas, oil, wood stove, solar) will be used to meet the completed project's energy need? Describe whether it will be used for heating, manufacturing, etc.

No energy use is anticipated to meet the completed project's energy needs.

b. Would your project affect the potential use of solar energy by adjacent properties? If so, generally describe.

The project will not affect the potential use of solar energy by adjacent properties.

c. What kinds of energy conservation features are included in the plans of the proposal? List other proposed measures to reduce or control energy impacts, if any:

None are included.

7. Environmental Health

a. Are there any environmental health hazards, including exposure to toxic chemicals, risk of fire and explosion, spill, or hazardous waste, that could occur as a result of this proposal? If so, describe.

As with all sites, there may be a risk of spills during construction, but the SWPPP will be implemented during construction.

(1) Describe special emergency services that might be required.

The need for special emergency services is not anticipated.

(2) Proposed measures to reduce or control environmental health hazards, if any.

Spill Prevention and Control Plans will be utilized by contractors working on-site.

b. Noise

(1) What types of noise exist in the area which may affect your project (for example, traffic, equipment, operation, other)?

There is existing traffic noise from 124th Avenue NE and surrounding properties.

(2) What types and levels of noise would be created by or associated with the project on a short-term or long-term basis (for example, traffic, construction, operation, other)? Indicate what hours noise would come from the site.

During construction (short-term), there would be elevated minor noise levels from machinery (e.g.; chainsaws). Construction would be limited to daylight hours. After construction (long-term) there are no anticipated elevated noise levels.

Noise regulated by BCC 9.18

(3) Proposed measures to reduce or control noise impacts, if any:

Motorized construction equipment is properly fitted with mufflers to reduce engine noise.

8. Land and Shoreline Use

a. What is the current use of the site and adjacent properties?

The property is currently used as a stormwater detention facility. The adjacent properties include primarily industrial and commercial uses, such as a bus and garbage truck maintenance and parking to the north and east, and business park/office buildings to the south and southeast. Also there is a self-storage facility to the north. To the east is 124th Avenue NE with a grocery processing facility across the street.

b. Has the site been used for agriculture? If so, describe.

The site has not been used for agriculture.

c. Describe any structures on the site.

There is a dam/flow control structure located at the southeast end of the project site. It maintains water levels on the property and allows for controlled flood attenuation. It is the only structure located on property.

d. Will any structures be demolished? If so, what?

No structures will be demolished.

e. What is the current zoning classification of the site?

The current zoning classification of the site is Bel-Red Residential (BR-R).

f. What is the current comprehensive plan designation of the site?

The current comprehensive plan designation of the site is Bel-Red Residential.

g. If applicable, what is the current shoreline master program designation of the site?

Not applicable.

h. Has any part of the site been classified as an “environmentally sensitive” area? If so, specify.

Yes. Much of the site is a wetland, and there is a short length of stream channel.

The West Tributary is on the site.

I. Approximately how many people would reside or work in the completed project?

Zero people would work or reside in the completed project.

j. Approximately how many people would the completed project displace?

No people will be displaced by the completed project.

RP

k. Proposed measures to avoid or reduce displacement impacts, if any:

No measures are needed.

i. Proposed measures to ensure the proposal is compatible with existing and projected land uses and plans, if any:

The restoration project is compatible with the City Bel-Red Subarea plan and specifically the Riparian Greenway Opportunity Areas. The project has been designed in cooperation with the City of Bellevue to meet City Critical Areas and Land Use Codes.

9. Housing

a. Approximately how many units would be provided, if any? Indicate whether high, middle, or low-income housing.

None would be provided.

b. Approximately how many units, if any, would be eliminated? Indicate whether high, middle, or low-income housing.

No housing units will be eliminated by the project.

c. Proposed measures to reduce or control housing impacts, if any:

No measures are needed.

10. Aesthetics

a. What is the tallest height of any proposed structure(s), not including antennas; what is the principal exterior building material(s) proposed?

No buildings are proposed as part of the project. The trail will be a maximum of 9 feet above the current ground surface.

A City Parks boardwalk is planned in the future around the wetland but is not a part of this project which is restoration only.

b. What views in the immediate vicinity would be altered or obstructed?

No views would be obstructed. Some views of the wetland from adjoining properties would be altered.

c. Proposed measures to reduce or control aesthetic impacts, if any:

None are included.

11. Light and Glare

a. What type of light or glare will the proposal produce? What time of day would it mainly occur?

No lights are proposed.

b. Could light or glare from the finished project be a safety hazard or interfere with views?

No

c. What existing off-site sources of light or glare may affect your proposal?

None

d. Proposed measures to reduce or control light or glare impacts, if any:

None are needed.

12. Recreation

a. What designated and informal recreational opportunities are in the immediate vicinity?

No known recreational opportunities are currently in the immediate vicinity.

b. Would the proposed project displace any existing recreational uses? If so, describe.

The project would not displace any recreational uses.

c. Proposed measures to reduce or control impacts on recreation, including recreation opportunities to be provided by the project or applicant, if any:

No measures are needed.

13. Historic and Cultural Preservation

a. Are there any places or objects listed on, or proposed for, national, state, or local preservation registers known to be on or next to the site? If so, generally describe.

The Washington State Department of Archaeology and Historic Preservation's online database (WISAARD) does not designate any historical sites on the state or national registers within the project boundaries

b. Generally describe any landmarks or evidence of historic, archeological, scientific, or cultural importance known to be on or next to the site.

The Washington State Department of Archaeology and Historic Preservation's online database (WISAARD) does not designate any historical sites on the state or national registers within the project boundaries

c. Proposed measures to reduce or control impacts, if any:

No cultural or historical impacts are anticipated because any soil disturbance will result from hand digging and plantings only; therefore, no mitigation measures are proposed at this time. However, if any artifacts or other indications of the presence of such are discovered during construction, activity in the area will immediately cease and the appropriate review agency or group will be notified.

14. Transportation

a. Identify public streets and highways serving the site, and describe proposed access to the existing street system. Show on site plans, if any.

The restoration project will not provide or require access to an existing street after it is constructed.

b. Is site currently served by public transit? If not, what is the approximate distance to the nearest transit stop?

The site is not currently accessible to the general public or served by public transit. However, there are bus stops located within walking distance.

c. How many parking spaces would be completed project have? How many would the project eliminate?

No parking spaces are proposed for the project and none would be eliminated.

d. Will the proposal require any new roads or streets, or improvements to existing roads or streets, not including driveways? If so, generally describe (indicate whether public or private).

No. No new roads or streets would be required and none would be improved for the proposal.

e. Will the project use (or occur in the immediate vicinity of) water, rail, or air transportation? If so, generally describe.

No.

f. How many vehicular trips per day would be generated by the completed project? If known, indicate when peak volumes would occur.

No vehicular trips are expected to be generated by the restoration project.

g. Proposed measures to reduce or control transportation impacts, if any:

None.

15. Public Services

a. Would the project result in an increased need for the public services (for example: fire protection, police protection, health care, schools, other)? If so, generally describe.

No.

b. Proposed measures to reduce or control direct impacts on public services, if any:

None.

16. Utilities

a. Circle utilities currently available at the site: electricity, natural gas, water, refuse service, telephone, sanitary sewer, septic system, other.

None.

b. Describe the utilities that are proposed for the project, the utility providing the service, and the general construction activities on the site or in the immediate vicinity which might be needed.

No utilities are proposed for the project.

Signature

The above answers are true and complete to the best of my knowledge. I understand that the lead agency is relying on them to make its decision.

Signature..... Date Submitted.....9/19/15.....

RP

LIST OF ATTACHMENTS

Critical Area Report

Habitat Assessment Report

Restoration Plan

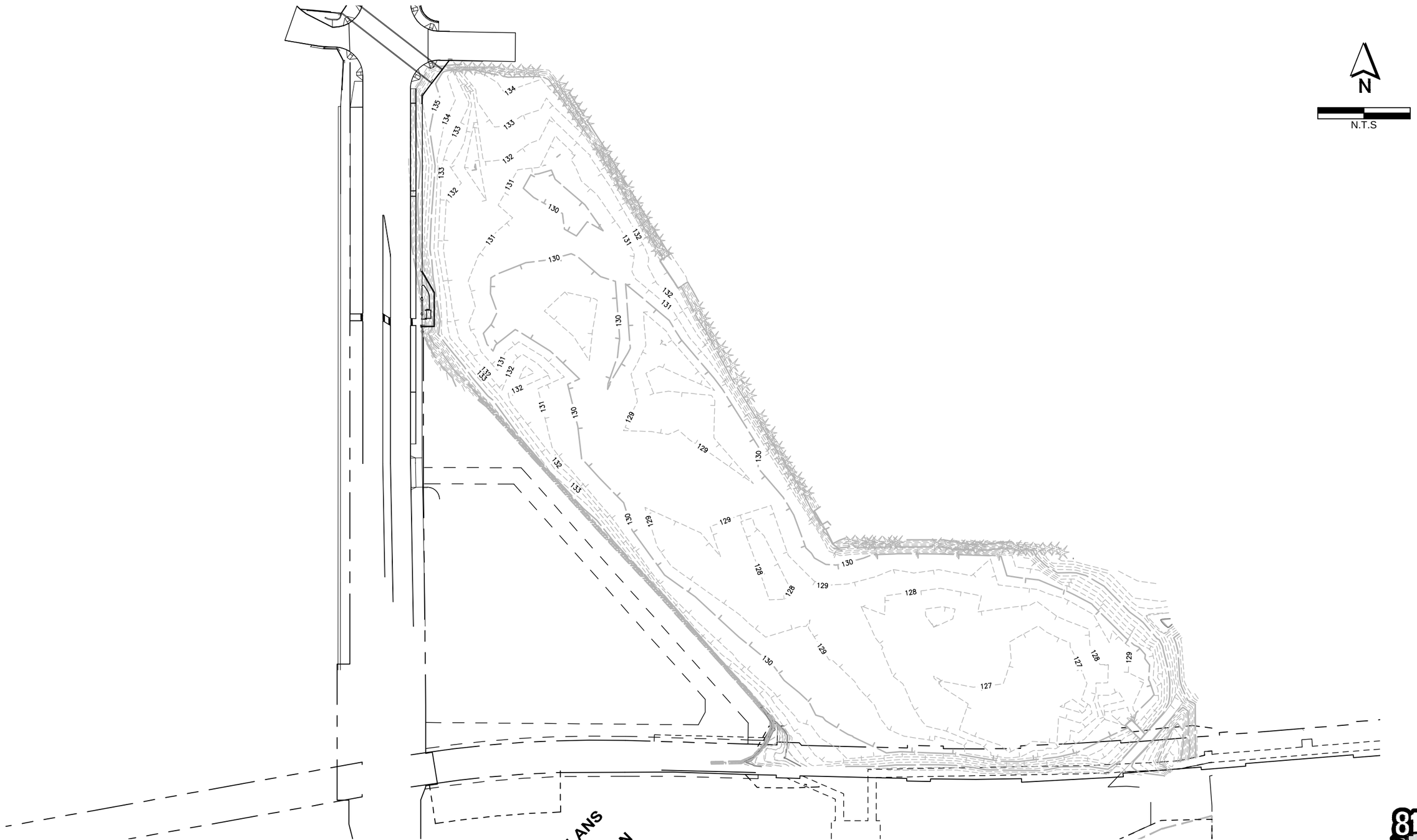

PERMIT PLANS NOT FOR CONSTRUCTION

811 Know what's below. Call before you dig.

REVISIONS	DATE	BY

DESIGNED D.SANDENO
DRAWN R.PETTIT
CHECKED
APPROVED

ONE INCH AT FULL SCALE. IF NOT, SCALE ACCORDINGLY

FILE NAME Figure topo_recover
JOB No. 553-1580-072
DATE AUGUST 2015

Parametrix
ENGINEERING . PLANNING . ENVIRONMENTAL SCIENCES
1019 39TH AVENUE SE, SUITE 100
PUYALLUP, WASHINGTON 98374
T. 253.604.6600 F. 253.604.6799
www.parametrix.com

PROJECT NAME
WEST TRIBUTARY KELSEY CREEK
DMP 165 - WETLAND RESTORATION
BELLEVUE, WASHINGTON

TOPOGRAPHY OF PROJECT SITE.

DRAWING NO. 1 OF 1

1

PATH: U:\PSO\Projects\Clients\1580-CityOfBellevue\553-1580-072 WTribKelseyCrWLRestor\99Svcs\CADD\FIGURES\ PLOTTED BY: pettirus DATE: Tuesday, September 01, 2015 2:04:33 PM
LAYOUT: Layout1

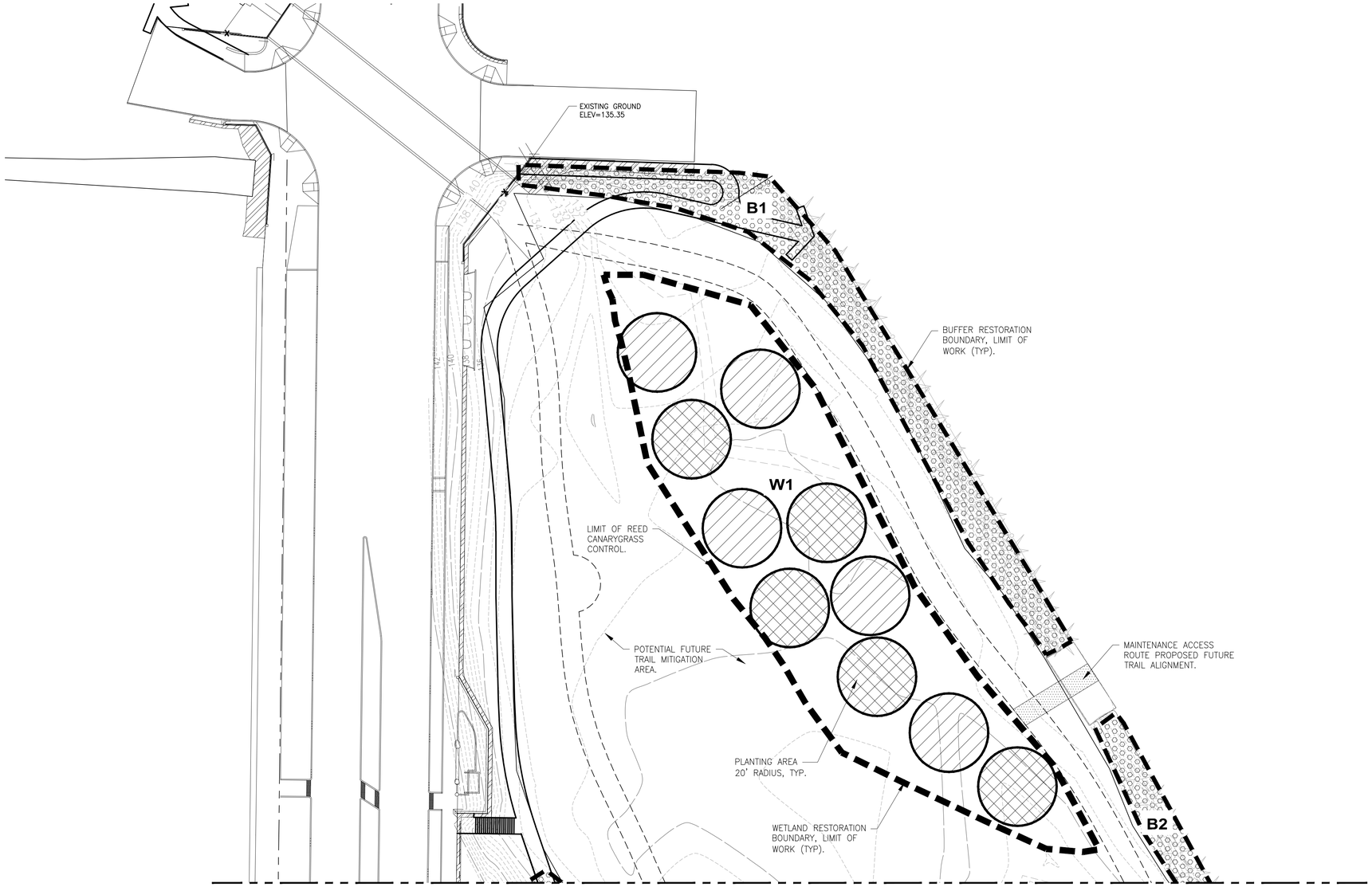

MATCH LINE - SEE SHEET L2

PLANTING QUANTITY TAB - THIS SHEET ONLY -

SYMBOL	ITEM	QUANTITY BY AREA
	WETLAND FORESTED POCKETS	W1
	SPACING – 2.5' O.C.	0.14 ACRE
	BLACK COTTONWOOD	50
	OREGON ASH	50
	PACIFIC WILLOW	210
	SITKA WILLOW	160
	WESTERN CRABAPPLE	50

PLANTING QUANTITY TAB - THIS SHEET ONLY -

SYMBOL	ITEM	QUANTITY BY AREA
	SCRUB SHRUB	W1
	SPACING – 1.25' O.C.	0.14 ACRE
	RED OSIER DOGWOOD	200
	SITKA WILLOW	400
	DOUGLAS SPIRAEA	100
	PACIFIC NINEBARK	100
	BLACK TWINBERRY	100
	SWAMP ROSE	100

PLANTING QUANTITY TAB - THIS SHEET ONLY -

SYMBOL	ITEM	QUANTITY BY AREA
	BUFFER RESTORATION	B1
		0.15 ACRE
	DOUGLAS FIR	7
	WESTERN RED CEDAR	7
	WESTERN HEMLOCK	7
	BIG LEAF MAPLE	7
	INDIAN PLUM	7
	SITKA SPRUCE	7
	BEAKED HAZELNUT	7
	OCEANSPRAY	20
	MOCKORANGE	10
	SNOWBERRY	20

PLANTING QUANTITY TAB - THIS SHEET ONLY -

SYMBOL	ITEM	QUANTITY BY AREA
	BUFFER RESTORATION	B2
		0.03 ACRE
	DOUGLAS FIR	1
	WESTERN RED CEDAR	1
	WESTERN HEMLOCK	1
	BIG LEAF MAPLE	1
	SITKA SPRUCE	1
	BEAKED HAZELNUT	1
	OCEANSPRAY	5
	MOCKORANGE	0
	SNOWBERRY	5

GENERAL NOTES:

1. SEE SHEET L3 FOR PLANTING DETAILS AND REQUIREMENTS.
2. PLANTING AREA LIMITS AND INTERPLANTING LOCATIONS SHALL BE STAKED IN THE FIELD AND APPROVED BY PROJECT REPRESENTATIVE PRIOR TO PLANTING.
3. ALL WOODY NATIVE PLANTS WILL BE SAVED AND PROTECTED WITHIN MITIGATION AREAS. NOTIFY BIOLOGIST/ LANDSCAPE ARCHITECT 5 DAYS PRIOR TO START OF CLEARING ACTIVITY. USE ONLY HAND TOOLS AND METHODS WHEN WORKING INSIDE THE DRIPLINE AREA OF EXISTING TREES AND SHRUBS.
4. ANY CHANGES TO PLANT MATERIAL, SIZE, OR SPACING MUST BE APPROVED BY THE PROJECT REPRESENTATIVE PRIOR TO INSTALLATION.

PLANTING NOTES:

1. THE INTENT OF THE WETLAND PLANTING PLAN IS TO CREATE PATCHES OR ISLANDS OF DENSE WOODY VEGETATION.

   TOTAL RESTORATION AREA = 0.92 ACRE
   TOTAL PLANTING AREA (½X) = 0.46 ACRE
2. PLANTING AREAS ARE PROJECTED TO HAVE 2X TYPICAL PLANT DENSITY.
3. PLANTING DENSITY SHOWN IS 4X TYPICAL TO ACCOUNT FOR 50% EXPECTED MORTALITY.

PLAN
SCALE IN FEET
0 60 120
N

811 Know what's below. Call before you dig.

PERMIT PLANS NOT FOR CONSTRUCTION

REVISIONS	DATE	BY

DESIGNED D.SANDENO
DRAWN R.PETTIT
CHECKED
APPROVED

ONE INCH AT FULL SCALE. IF NOT, SCALE ACCORDINGLY
FILE NAME xPS01580072 C-LS
JOB No. 553-1580-072
DATE AUGUST 2015

Parametrix
ENGINEERING . PLANNING . ENVIRONMENTAL SCIENCES
1019 39TH AVENUE SE, SUITE 100
PUYALLUP, WASHINGTON 98374
T. 253.604.6600 F. 253.604.6799
www.parametrix.com

PROJECT NAME
WEST TRIBUTARY KELSEY CREEK DMP 165 - WETLAND RESTORATION
BELLEVUE, WASHINGTON

RESTORATION PLAN

DRAWING NO. 1 OF 4
L1

LAYOUT: L1 PATH: C:\PMX\Temp\AcPublish_2040\ PLOTTED BY: hoefekat DATE: Monday, August 31, 2015 8:41:00 AM

MATCH LINE - SEE SHEET L1

PLAN

SCALE IN FEET

0 60 120

N

GENERAL NOTES:

1. SEE SHEET L3 FOR PLANTING DETAILS AND REQUIREMENTS.
2. PLANTING AREA LIMITS AND INTERPLANTING LOCATIONS SHALL BE STAKED IN THE FIELD AND APPROVED BY PROJECT REPRESENTATIVE PRIOR TO PLANTING.
3. ALL WOODY NATIVE PLANTS WILL BE SAVED AND PROTECTED WITHIN MITIGATION AREAS. NOTIIFY BIOLOGIST/ LANDSCAPE ARCHITECT 5 DAYS PRIOR TO START OF CLEARING ACTIVITY. USE ONLY HAND TOOLS AND METHODS WHEN WORKING INSIDE THE DRIPLINE AREA OF EXISTING TREES AND SHRUBS.
4. ANY CHANGES TO PLANT MATERIAL, SIZE, OR SPACING MUST BE APPROVED BY THE PROJECT REPRESENTATIVE PRIOR TO INSTALLATION.

PLANTING NOTES:

1. THE INTENT OF THE PLANTING PLAN IS TO CREATE PATCHES OR ISLANDS OF DENSE WOODY VEGETATION.

   TOTAL RESTORATION AREA = 0.92 ACRE
   TOTAL PLANTING AREA (½X) = 0.46 ACRE

2. PLANTING AREAS ARE PROJECTED TO HAVE 2X TYPICAL PLANT DENSITY.
3. PLANTING DENSITY SHOWN IS 4X TYPICAL TO ACCOUNT FOR 50% EXPECTED MORTALITY.

PLANTING QUANTITY TAB - THIS SHEET ONLY -

SYMBOL	ITEM	QUANTITY BY AREA
FORESTED POCKETS		W2
SPACING – 2.5' O.C.		0.09 ACRE
	BLACK COTTONWOOD	40
	OREGON ASH	40
	PACIFIC WILLOW	110
	SITKA WILLOW	75
	WESTERN CRABAPPLE	40

PLANTING QUANTITY TAB - THIS SHEET ONLY -

SYMBOL	ITEM	QUANTITY BY AREA
SCRUB SHRUB		W2
SPACING – 1.25' O.C.		0.09 ACRE
	RED OSIER DOGWOOD	120
	SITKA WILLOW	200
	DOUGLAS SPIRAEA	120
	PACIFIC NINEBARK	80
	BLACK TWINBERRY	80

PLANTING QUANTITY TAB - THIS SHEET ONLY -

SYMBOL	ITEM	QUANTITY BY AREA
BUFFER RESTORATION		B2
		0.09 ACRE
	DOUGLAS FIR	3
	WESTERN RED CEDAR	3
	WESTERN HEMLOCK	3
	BIG LEAF MAPLE	3
	INDIAN PLUM	3
	SITKA SPRUCE	3
	BEAKED HAZELNUT	3
	OCEANSPRAY	7
	MOCKORANGE	7
	SNOWBERRY	7

PLANTING QUANTITY TAB - THIS SHEET ONLY -

SYMBOL	ITEM	QUANTITY BY AREA
BUFFER RESTORATION		B3
		0.19 ACRE
	DOUGLAS FIR	7
	WESTERN RED CEDAR	7
	WESTERN HEMLOCK	7
	BIG LEAF MAPLE	7
	SITKA SPRUCE	7
	BEAKED HAZELNUT	7
	OCEANSPRAY	20
	MOCKORANGE	10
	SNOWBERRY	20

PERMIT PLANS NOT FOR CONSTRUCTION

811 Know what's **below.** **Call** before you dig.

LAYOUT: L2 PATH: C:\PMX\Temp\AcPublish_2040\ PLOTTED BY: hoefekst DATE: Monday, August 31, 2015 8:41:01 AM

REVISIONS	DATE	BY

DESIGNED D.SANDENO
DRAWN R.PETTIT
CHECKED
APPROVED

ONE INCH AT FULL SCALE. IF NOT, SCALE ACCORDINGLY
FILE NAME xPS01580072 C-LS
JOB No. 553-1580-072
DATE AUGUST 2015

Parametrix
ENGINEERING . PLANNING . ENVIRONMENTAL SCIENCES
1019 39TH AVENUE SE, SUITE 100
PUYALLUP, WASHINGTON 98374
T. 253.604.6600 F. 253.604.6799
www.parametrix.com

PROJECT NAME
WEST TRIBUTARY KELSEY CREEK
DMP 165 - WETLAND RESTORATION
BELLEVUE, WASHINGTON

RESTORATION PLAN

DRAWING NO. 2 OF 4

L2

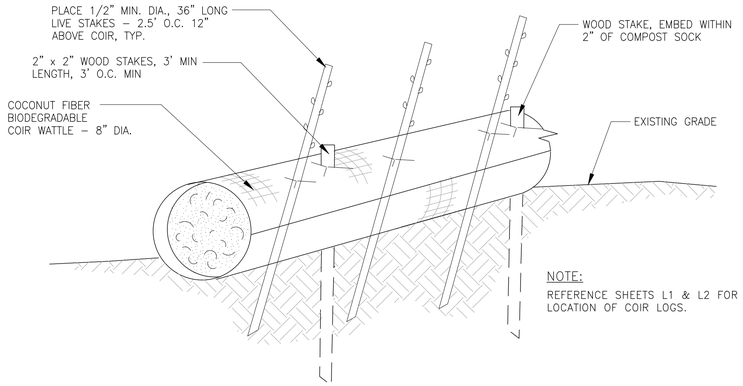

COIR LOG PLANTING
DETAIL
NO SCALE

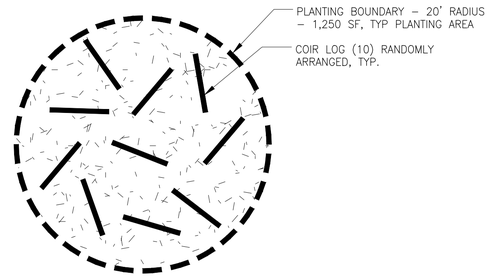

TYPICAL PLANTING CIRCLE
DETAIL
NO SCALE

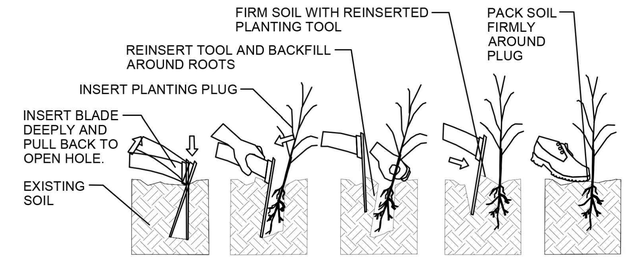

NOTES:

1. CREATE PLANTING HOLE WITHOUT REMOVING ANY SOIL BY INSERTING A DIBBLE, HOEDAD OR NARROW BLADE SHOVEL INTO GROUND AND BY PUSHING THE TOOL BACK AND FORTH. PLANTING HOLE SHALL BE LARGE ENOUGH TO ACCOMMODATE ENTIRE ROOT SYSTEM IN ITS NATURAL CONFIGURATION.
2. THIS SAME METHOD SHALL BE USED WHEN PLANTING COMPOST BAGS.

TREE AND SHRUB PLUG PLANTING
DETAIL
NO SCALE

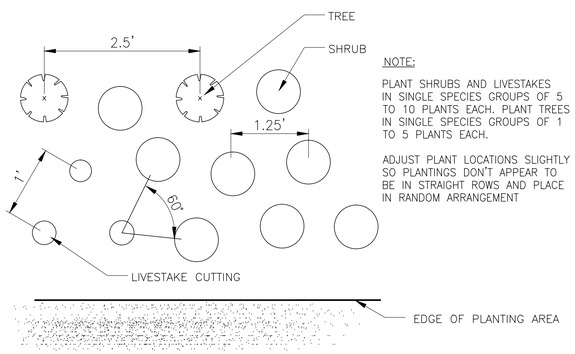

NOTE:

PLANT SHRUBS AND LIVESTAKES IN SINGLE SPECIES GROUPS OF 5 TO 10 PLANTS EACH. PLANT TREES IN SINGLE SPECIES GROUPS OF 1 TO 5 PLANTS EACH.

ADJUST PLANT LOCATIONS SLIGHTLY SO PLANTINGS DON'T APPEAR TO BE IN STRAIGHT ROWS AND PLACE IN RANDOM ARRANGEMENT

TYPICAL TREE AND SHRUB SPACING
DETAIL
NO SCALE

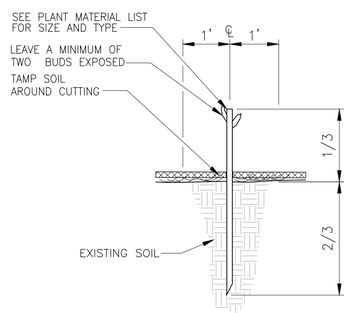

LIVE STAKE CUTTING PLANTING
DETAIL
NO SCALE

QUANTITY	BOTANICAL NAME	COMMON NAME	MIN. SIZE	CONDITION
	Trees			
90	POPULOUS BALSAMIFERA	BLACK COTTONWOOD	48" HT	LIVE STAKE
18	PSUEDOTSUGA MENZIESII	DOUGLAS FIR	12" HT	BAREROOT OR CONT.
18	THUJA PLICATA	WESTERN RED CEDAR	12" HT	BAREROOT OR CONT.
18	TSUGA HETEROPHYLLA	WESTERN HEMLOCK	12" HT	BAREROOT OR CONT.
18	ACER MACROPHYLUM	BIG LEAF MAPLE	18" HT	BAREROOT OR CONT.
10	OEMLERIA CERASIFORMIS	INDIAN PLUM	12" HT	BAREROOT OR CONT.
18	PICEA SITCHENSIS	SITKA SPRUCE	12" HT	BAREROOT OR CONT.
18	CORYLUS CORNUTA	BEAKED HAZELNUT	12" HT	BAREROOT OR CONT.
90	FRAXINUS LATIFOLIA	OREGON ASH	36" HT	LIVE STAKE
835	SALIX SITCHENSIS	SITKA WILLOW	36" HT	LIVE STAKE
85	SALIX LUCIDA VAR LASIANDRA	PACIFIC WILLOW	36" HT	LIVE STAKE
90	MALUS FUSCA	WESTERN CRABAPPLIE	36" HT	BAREROOT OR CONT.
	Shrubs			
320	CORNUS SERICEA	RED-TWIG DOGWOOD	12" HT	BAREROOT OR CONT.
220	SPIREA DOUGLASII	DOUGLAS SPIREA	12" HT	BAREROOT OR CONT.
180	PHYSOCARPUS CAPITATUS	PACIFIC NINEBARK	12" HT	BAREROOT OR CONT.
180	LONICERA INVOLUCRATA	BLACK TWINBERRY	12" HT	BAREROOT OR CONT.
100		SWAMP ROSE	12" HT	BAREROOT OR CONT.
52		OCEAN SPRAY	12" HT	BAREROOT OR CONT.
27		MOCK ORANGE	12" HT	BAREROOT OR CONT.
52		SNOW BERRY	12" HT	BAREROOT OR CONT.

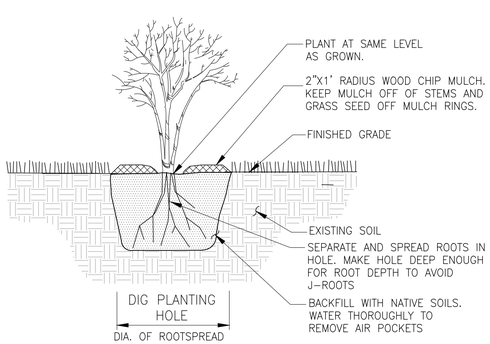

BAREROOT PLANTING
DETAIL
NO SCALE

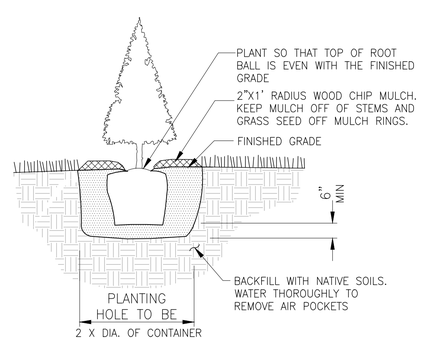

CONTAINER PLANTING
DETAIL
NO SCALE

PERMIT PLANS NOT FOR CONSTRUCTION

Know what's below. Call before you dig.

REVISIONS	DATE	BY

DESIGNED D.SANDENO
DRAWN R.PETTIT
CHECKED
APPROVED

ONE INCH AT FULL SCALE. IF NOT, SCALE ACCORDINGLY
FILE NAME xPS01580072 C-LS
JOB No. 553-1580-072
DATE AUGUST 2015

Parametrix
ENGINEERING . PLANNING . ENVIRONMENTAL SCIENCES
1019 39TH AVENUE SE, SUITE 100
PUYALLUP, WASHINGTON 98374
T. 253.604.6600 F. 253.604.6799
www.parametrix.com

PROJECT NAME
WEST TRIBUTARY KELSEY CREEK
DMP 165 - WETLAND RESTORATION
BELLEVUE, WASHINGTON

PLANTING DETAILS & MATERIALS LIST

DRAWING NO.
3 OF 4
L3

LAYOUT: L3 PATH: C:\PMX\Temp\AcPublish_2040\ PLOTTED BY: hoefekat DATE: Monday, August 31, 2015 8:41:02 AM

RESTORATION CONSTRUCTION NOTES:

1. PRIOR TO CONSTRUCTION, CLEARING LIMITS SHALL BE CLEARLY IDENTIFIED WITH HIGH VISIBILITY FENCE. THE OWNERS REPRESENTATIVE SHALL VERIFY AND APPROVE FENCE LOCATIONS PRIOR TO CONSTRUCTION.
2. CONTRACTOR SHALL ARRANGE TO MEET ON SITE WITH OWNERS REPRESENTATIVE AND BIOLOGIST TO DISCUSS LIMITS OF WORK AND METHODS. CONSTRUCTION ACTIVITIES SHALL NOT COMMENCE UNTIL ACCESS, LIMITS OF WORK, AND METHODS ARE APPROVED.
3. PLANTING PLANS REPRESENT A CONCEPTUAL PLANT LAYOUT. FINAL PLANT LOCATIONS SHALL BE APPROVED BY BIOLOGIST/LANDSCAPE ARCHITECT PRIOR TO PLANTING.
4. USE ONLY HAND TOOLS TO CLEAR AND CULTIVATE SOIL UNDER THE CANOPY (WITHIN AND 5' OUTSIDE THE DRIPLINE) OF EXISTING TREES.
5. ALL PLANTS SHALL BE NURSERY GROWN A MINIMUM OF ONE YEAR. PLANT MATERIAL IS TO BE SUPPLIED BY COMMERCIAL NURSERIES THAT SPECIALIZE IN PLANTS NATIVE TO THE PACIFIC NORTHWEST. PLANT SUBSTITUTIONS ARE SUBJECT TO APPROVAL BY BIOLOGIST/LANDSCAPE ARCHITECT.
6. PLANTING SHALL TAKE PLACE DURING THE DORMANT SEASON (NOVEMBER 1ST TO FEBRUARY 28TH). PLANTING MAY BE ALLOWED AT OTHER TIMES AFTER REVIEW AND WRITTEN APPROVAL BY BIOLOGIST/LANDSCAPE ARCHITECT.
7. THE CONTRACTOR SHALL BE RESPONSIBLE FOR PROPER DISPOSING OF ALL DEBRIS AND EXCESS SOIL OCCASIONED BY THIS PROJECT.
8. CONTRACTOR SHALL VERIFY THE LOCATION OF ALL UTILITIES PRIOR TO EXCAVATION.
9. ALL DIMENSIONS FOR PLANT SIZES ARE MINIMUM REQUIREMENTS.
10. EXISTING AREAS DISTURBED BY CONSTRUCTION ACTIVITIES AND NOT SHOWN TO BE RE-VEGETATED ON THESE PLANS SHALL BE RESTORED
11. DISCREPANCIES BETWEEN THE PLANS AND SITE CONDITIONS SHALL BE BROUGHT TO THE ATTENTION OF THE BIOLOGIST/LANDSCAPE ARCHITECT PRIOR TO PROCEEDING.
12. CONTRACTOR SHALL BE RESPONSIBLE FOR WATERING PLANTS FOR THE FIRST YEAR IN BUFFER ONLY.

CONSTRUCTION SEQUENCE

THE RESTORATION PLAN IS ASSUMED TO BE CONSTRUCTED IN ONE PHASE. SITE PREPARATION ACTIVITIES WILL BEGIN IN THE SUMMER FOLLOWING PERMIT ISSUANCE. PLANTING WILL OCCUR DURING THE SPRING (MARCH OR APRIL) OF THE FOLLOWING YEAR.

1. PRE-CONSTRUCTION MEETING: PRIOR TO ANY SITE WORK, A PRE-CONSTRUCTION MEETING WILL BE HELD WITH THE GENERAL CONTRACTORS, LANDSCAPE CONTRACTORS, AND BIOLOGISTS TO ENSURE THAT THE WORK IS CONSTRUCTED AS DESIGNED, AND THAT CONTRACTORS UNDERSTAND AND COMPLY WITH ALL ENVIRONMENTAL PERMIT CONDITIONS.
2. THE WETLAND BIOLOGIST WILL BE AVAILABLE FOR ON-SITE INSPECTIONS AND APPROVAL OF ALL WORK DURING CONSTRUCTION.
3. CITY UTILITIES DEPARTMENT WILL LOWER WATER LEVELS IN POND TO 128' PRIOR TO CONSTRUCTION.
4. ACCESS ROADS AND STAGING AREAS: A CLEAR ACCESS WORK AREA WILL BE ESTABLISHED IN THE FIELD BY THE CONTRACTOR PRIOR TO BEGINNING ANY EARTHWORK. THE STAGING AREA IS PROPOSED FOR THE CITY PROPERTY SOUTH OF DMP 165.
5. TEMPORARY EROSION AND SEDIMENT CONTROL: STANDARD SEDIMENT FENCES WILL BE PLACED ALONG THE EDGES OF ACCESS ROADS TO PREVENT SOIL EROSION AND SEDIMENTATION TO ADJACENT WETLAND AREAS. HIGH VISIBILITY CONSTRUCTION FENCING WILL BE PLACED AT THE EDGE OF WORK AREAS TO ENSURE THAT ACTIVITIES DO NOT EXTEND BEYOND THE APPROVED WORK AREA.
6. BREACH BOTH BEAVER DAMS IN FIVE LOCATIONS (NUMBER AND SIZE OF BREACHES TO BE DETERMINED IN THE FIELD). BREACH SOUTHERN DAM FIRST, NORTHERN DAM SECOND. BREACH USING CHAIN SAW AND WRECKING BAR, OR OTHER APPROPRIATE HAND TOOLS. BREACHES WILL BE A MINIMUM OF 5 FT WIDE AND CUT DOWN TO BELOW THE SEDIMENT LEVEL. REMOVED DAM DEBRIS WILL BE REMOVED FROM THE RESTORATION AREA TO THE EXENT PRACTICAL AND AS APPROVED BY THE WETLAND BIOLOGIST.
7. STAKE CENTERPOINT OF WETLAND PLANTING AREAS BY BIOLOGIST.
8. WEED CONTROL
9. INSTALL COIR LOGS
10. FOLLOWING SITE PREPARATION ACTIVITIES, PLANT THE RESTORATION AREA WITH NATIVE WOODY VEGETATION AS SHOWN IN THE PLAN SET.
11. REMOVE ACCESS ROADS AND ESC MEASURES.
12. RESTORE ACCESS AREAS TO PRE-CONSTRUCTION CONDITIONS.
13. CONTRACTOR SHALL ARRANGE FOR A SITE MEETING WITH CITY AND BIOLOGISTS TO VERIFY PROJECT WAS CONSTRUCTED ACCORDING TO PLANS.
14. CONTRACTOR TO PREPARE AS-BUILT DRAWINGS OF BEAVER DAM BREACHES AND PLANT LOCATIONS.

NOXIOUS WEED CONTROL MEASURES

PRIOR TO INSTALLING NEW PLANT MATERIAL, NOXIOUS WEEDS IN THE WETLAND AND ITS BUFFER WILL BE REMOVED.

1) REED CANARYGRASS CONTROL STRATEGIES WILL INCLUDE PRE-CONSTRUCTION HERBICIDE APPLICATION. IN PLANTING AREAS, REED CANARYGRASS WILL BE CONTROLLED USING A COMBINATION OF MOWING (USING PORTABLE WEED EATERS) AND APPROVED HERBICIDE IN ACCORDANCE WITH THE CITY OF BELLEVUE'S BMPS AND THE STATE'S REQUIREMENTS FOR HERBICIDAL APPLICATIONS NEAR WATER. IN GENERAL, THE FOLLOWING SEQUENCE OF CONTROL TREATMENTS WILL REDUCE REED CANARYGRASS COVER AND VIGOR SUFFICIENTLY TO ENHANCE WOODY PLANT ESTABLISHMENT:
   - STAKE PLANTING AREAS
   - MOW OR 'WEED EAT' THE DESIGNATED PLANTING AREAS
   - ALLOW RE-SPROUTING OF REED CANARYGRASS TO APPROXIMATELY 1 FOOT
   - SPRAY WITH APPROVED HERBICIDE
   - RE-SPRAY WITH APPROVED HERBICIDE AFTER 1 FOOT OF REGROWTH
   - PLANT NO SOONER THAN 30 DAYS AFTER HERBICIDE APPLICATION

2) THIS SEQUENCE CAN BE MODIFIED BY THE CITY OF BELLEVUE TO BEST MEET SITE CONDITIONS AT THE TIME OF CONSTRUCTION. DETAILS OF THE WEED CONTROL PLANS ARE DESCRIBED ABOVE AND IN THE CRITICAL AREAS REPORT FOR THE PROJECT.

3) IN THE WETLANDS AREA PURPLE LOOSESTRIFE WILL BE LOCATED AND REMOVED TO THE GREATEST EXTENT PRACTICABLE. COMMON NIGHTSHADE (SOLANUM DULCAMERA) AND YELLOW FLAG IRIS (IRIS PSEUDACORUS) ARE ALSO COMMON IN THE DETENTION FACILITY. BOTH SPECIES CAN OUTCOMPETE DESIRABLE NATIVE SPECIES; THEREFORE, THEY WILL BE REMOVED BY HAND WHERE DISCRETE MANAGEABLE PATCHES ARE FOUND AND CAN BE ACCESSED.

4) IN THE UPLAND BUFFER, BLACKBERRY (RUBUS SPP.), ENGLISH IVY, AND SCOT'S BROOM ARE PREVALENT. THESE SPECIES WILL BE CONTROLLED USING HERBICIDE APPLICATIONS OR HAND REMOVAL MEASURES. IN BUFFER PLANTING AREAS, THESE SPECIES WILL BE COMPLETELY REMOVED PRIOR TO PLANTING.

5) OTHER NOXIOUS WEEDS ON THE KING COUNTY, WASHINGTON, LIST OF NOXIOUS WEEDS WILL BE CONTROLLED.

PERMIT PLANS NOT FOR CONSTRUCTION

Know what's below. Call before you dig.

	REVISIONS	DATE	BY	
				DESIGNED D.SANDENO
				DRAWN R.PETTIT
				CHECKED
				APPROVED

ONE INCH AT FULL SCALE. IF NOT, SCALE ACCORDINGLY

FILE NAME xPS01580072 C-LS
JOB No. 553-1580-072
DATE AUGUST 2015

Parametrix
ENGINEERING . PLANNING . ENVIRONMENTAL SCIENCES
1019 39TH AVENUE SE, SUITE 100
PUYALLUP, WASHINGTON 98374
T. 253.604.6600 F. 253.604.6799
www.parametrix.com

PROJECT NAME
WEST TRIBUTARY KELSEY CREEK
DMP 165 - WETLAND RESTORATION
BELLEVUE, WASHINGTON

CONSTRUCTION NOTES

DRAWING NO.
4 OF 4
L4

LAYOUT: L4 PATH: C:\PMX\Temp\AcPublish_2040\ PLOTTED BY: hoefekot DATE: Monday, August 31, 2015 8:41:04 AM

Critical Areas Report
West Tributary Kelsey Creek DMP 165 Wetland Restoration Project

Prepared for
City of Bellevue

August 2015

Prepared by
Parametrix

Critical Areas Report
West Tributary Kelsey Creek DMP 165
Wetland Restoration Project

Prepared for

City of Bellevue
450 110th Ave NE
Bellevue, WA 98009

Prepared by

Parametrix
719 2nd Avenue, Suite 200
Seattle, WA 98104
T. 206.394.3700 F. 1.855.542.6353
www.parametrix.com

August 2015 | 553-1580-072

CITATION

Parametrix. 2015. Critical Areas Report
West Tributary Kelsey Creek DMP 165 Wetland
Restoration Project. Prepared by Parametrix,
Seattle, Washington. August 2015.

TABLE OF CONTENTS

1. INTRODUCTION 1-1
1.1 SITE DESCRIPTION 1-1
1.2 PURPOSE OF REPORT 1-1
1.3 PROJECT DESCRIPTION 1-1
2. METHODS 2-1
2.1 REVIEW OF EXISTING INFORMATION 2-1
2.2 FIELD INVESTIGATION 2-2
2.2.1 Wetland Identification and Delineation 2-2
2.2.2 Wetland Classification and Rating 2-4
2.2.3 Stream Identification and Rating 2-5
2.2.4 Habitat Associated with Species of Local Importance 2-5
2.2.5 Other Critical Areas 2-5
3. HABITAT ASSESSMENT 3-1
3.1 SUMMARY OF EXISTING INFORMATION 3-1
3.2 SITE CHARACTERISTICS 3-1
3.2.1 Watershed and Topography 3-1
3.2.2 Hydrology 3-2
3.2.3 Soils 3-2
3.2.4 Vegetation 3-2
3.2.5 Priority Habitats 3-3
3.3 WETLANDS 3-3
3.3.1 Wetland 1 3-3
3.3.2 Wetland Buffer 3-4
3.3.3 Wildlife Habitat Functions 3-4
3.4 STREAMS 3-8
3.4.1 West Tributary of Kelsey Creek 3-8
3.4.2 Fish Use 3-8
3.5 SPECIES OF LOCAL IMPORTANCE 3-9
4. IMPACT ASSESSMENT 4-1
4.1 IMPACTS ON CRITICAL AREAS 4-1
5. RESTORATION PLAN 5-1
5.1 MINIMIZATION MEASURES 5-1
5.2 GOALS AND OBJECTIVES 5-1
5.2.1 Long-Term Goal 5-1
5.2.2 Performance Standards 5-1
5.2.3 Restoration Objectives 5-2
5.2.4 Construction Plan 5-3

TABLE OF CONTENTS (CONTINUED)

5.3 MONITORING PLAN 5-5
5.4 CONTINGENCY PLAN 5-6
5.4.1 Hydrology 5-6
5.4.2 Vegetation 5-6
5.4.3 Beaver Control Plan 5-6
5.5 MAINTENANCE AND ADAPTIVE MANAGEMENT 5-7
5.6 PERFORMANCE SECURITY 5-7
6. REFERENCES 6-1

LIST OF FIGURES

1-1 Vicinity Map 1-2
3-1 Existing Habitat Conditions 3-5

LIST OF TABLES

2-1 Key to Plant Indicator Status Categories 2-3
2-2 Criteria for Wetland Rating Categories as Specified by Ecology and the City of Bellevue 2-4
5-1 Planting List 5-5

ATTACHMENTS

A Background Information
B Site Photographs
C Wetland Determination Data Forms
D Wetland Rating Forms

ACRONYMS AND ABBREVIATIONS

BMP	best management practice
CIP	Capital Investment Program
City	City of Bellevue
Corps	U.S. Army Corps of Engineers
DNR	Washington State Department of Natural Resources
Ecology	Washington State Department of Ecology
ESA	Endangered Species Act
FAC	Facultative
FACU	Facultative Upland
FACW	Facultative Wetland
FEMA	Federal Emergency Management Agency
GPS	global positioning system
HGM	hydrogeomorphic (classification)
JARPA	Joint Aquatic Resources Permit Application
LUC	Land Use Code
NRCS	Natural Resources Conservation Service
NWI	National Wetlands Inventory
OBL	Obligate
PHS	Priority Habitats and Species
RTK	Real Time Kinematic
Sound Transit	Central Puget Sound Regional Transit Authority
SR	State Route
UPL	Upland
USFWS	U.S. Fish and Wildlife Service
WDFW	Washington Department of Fish and Wildlife
WSRN	Washington State Reference Network

1. INTRODUCTION

This Critical Areas Report describes existing habitat conditions, assists project planning, and supports permitting for the City of Bellevue's West Tributary Kelsey Creek DMP 165 Wetland Restoration Project. This Critical Areas Report is based on the Design Report (SAIC 2012) for the project, but reflects new information from adjacent projects. However, it does not include the construction of a trail or associated mitigation for trail impacts previously designed and discussed in the 2012 Critical Areas Report (Parametrix 2012).

1.1 Site Description

The project site is located within a developed industrial area in the Bel-Red corridor in the city of Bellevue, Washington. The southern portion of the site is predominantly open water, while the central and northern portions are dominated by herbaceous vegetation, logs, and snags.

1.2 Purpose of Report

The purpose of this report is to describe the wetlands, streams, and wildlife habitat within the project area. This report discusses existing conditions, the proposed project, potential impacts of the project, and measures taken to avoid and minimize impacts. This report is intended to satisfy the requirements of the Bellevue Land Use Code (LUC 20.25) for the project.

1.3 Project Description

The proposed project is a wetland restoration project within the West Tributary Detention Pond located at 1770-124th Avenue NE, Bellevue, Washington (Figure 1-1). The project is located in Section 28, Township 25 North, Range 5 East. It will include restoration of wetlands adjacent to the West Tributary of Kelsey Creek in the northern portion of the site. The restoration will be integrated into the regional detention facility while partially incorporating the long-range vision for the site from the perspective of the overall redevelopment of the Bel-Red corridor.

N

Parametrix

West Tributary Kelsey Creek DMP 165 Wetland Restoration Project
City of Bellevue
Figure 1-1. Vicinity Map

2. METHODS

This project is based on a review of existing information and field investigations. The goal of these efforts is to document existing information to reflect current site conditions and to collect new information to assess impacts.

2.1 Review of Existing Information

Prior to conducting fieldwork, Parametrix reviewed public resource information, documentation prepared for the 2012 30% design report, and information from adjacent projects including, but not limited to, the following sources. Attachment A provides some of these sources.

- Natural Resources Conservation Service (NRCS) Web soil survey (NRCS 2011)
- National Wetlands Inventory (NWI) online interactive mapper (U.S. Fish and Wildlife Service [USFWS] 2011)
- Washington State Department of Natural Resources (DNR) Natural Heritage Program GIS Layer (DNR 2011)
- *A Catalog of Washington Streams and Salmon Utilization, Volume 1, Puget Sound Region* (Williams et al. 1975)
- Priority Habitats and Species (PHS) Report (Washington Department of Fish and Wildlife [WDFW] 2015)
- SalmonScape database (WDFW 2011)
- City of Bellevue West Tributary Basin map
- Documentation prepared for the 2012 30% design report:
  - Permit Strategy Letter—May 22, 2012
  - Draft Permit Applications
  - Joint Aquatic Resources Permit Application (JARPA); U.S. Army Corps of Engineers (Corps) Section 404 Permit/Hydraulic Project Approval—December 19, 2012
  - State Environmental Policy Act Checklist—December 19, 2012
  - Endangered Species Act (ESA) No Effect Letter—October 25, 2012
  - City of Bellevue Critical Areas Report
  - Conceptual Mitigation Plan
  - Conceptual Trail Plan
  - Survey—Topographic Survey of Pond
  - Design Report

- Adjacent projects
  - *Wetland and Stream Delineation Technical Report, NE 4th Street/120th Avenue NE Corridor Project* (Shannon & Wilson 2011)
  - Off-site mitigation design plans prepared by the Central Puget Sound Regional Transit Authority (Sound Transit)
  - Sound Transit preliminary engineering plans for a retained cut section transitioning to a bridge over a portion of the project area
  - City of Bellevue proposed NE 15th/16th Street Capital Investment Program (CIP) project
  - City of Bellevue proposed 124th Avenue NE CIP project for widening the street adjacent to the regional detention facility

2.2 Field Investigation

Field investigations at the project site occurred in August 2011. Additional studies for the nearby 124th Avenue NE/Bel-Red corridor improvement project were performed in December 2011. Subsequent site visits occurred in 2014 and 2015 to verify current conditions.

2.2.1 Wetland Identification and Delineation

The methods specified in the *Corps of Engineers Wetland Delineation Manual* (Environmental Laboratory 1987) and in the *Regional Supplement to the Corps of Engineers Wetland Delineation Manual: Western Mountains, Valleys, and Coast Region* (Corps 2010) were used by project biologists to delineate on-site wetlands.

Wetlands are defined as those areas that are inundated or saturated by surface water or groundwater at a frequency and duration sufficient to support, and that under normal circumstances do support, a prevalence of vegetation typically adapted for life in saturated soil conditions. An area must meet these three criteria or exhibit at least one positive field indicator of wetland vegetation, soils, and hydrology to be considered a wetland. Wetland determination data forms from the *Regional Supplement to the Corps of Engineers Wetland Delineation Manual: Western Mountains, Valleys, and Coast Region* (Corps 2010) were recorded for each wetland.

The delineated wetlands were instrument-surveyed by professional land surveyors. Both Real Time Kinematic (RTK) and conventional survey instruments were used. An RTK receiver combined with a data link to the Washington State Reference Network (WSRN) provides survey-grade global positioning system (GPS) accuracy.

2.2.1.1 Vegetation

The dominant plants and their wetland indicator status were evaluated to determine if the vegetation was hydrophytic. Hydrophytic vegetation is generally defined as vegetation adapted to prolonged saturated soil conditions. To meet the hydrophytic vegetation criterion, more than 50 percent of the dominant plants must be Facultative (FAC), Facultative Wetland (FACW), or Obligate (OBL), based on the plant indicator status category assigned to each plant species by the USFWS (Reed 1988, 1993). Table 2-1 lists the definitions of the indicator status categories.

Scientific and common plant names follow currently accepted nomenclature. Most names are consistent with *Flora of the Pacific Northwest* (Hitchcock and Cronquist 1973) and the PLANTS Database (NRCS 2010). During the field investigations by biologists, dominant plant species were observed and recorded on data forms for each sample plot.

Table 2-1. Key to Plant Indicator Status Categories

Plant Indicator Status Category	Symbol	Definition
Obligate Wetland Plants	OBL	Plants that almost always (> 99% of the time) occur in wetlands, but which may rarely (< 1% of the time) occur in non-wetlands.
Facultative Wetland Plants	FACW	Plants that often (67% to 99% of the time) occur in wetlands, but sometimes (1% to 33% of the time) occur in non-wetlands.
Facultative Plants	FAC	Plants with a similar likelihood (33% to 66% of the time) of occurring in both wetlands and non-wetlands.
Facultative Upland Plants	FACU	Plants that sometimes (1% to 33% of the time) occur in wetlands, but occur more often (67% to 99% of the time) in non-wetlands.
Upland Plants	UPL	Plants that rarely (< 1% of the time) occur in wetlands and almost always (> 99% of the time) occur in non-wetlands.

Source: Environmental Laboratory (1987).

2.2.1.2 Soils

Generally, an area must have hydric soils to be a wetland. Hydric soil forms when soils are saturated, flooded, or ponded long enough during the growing season to develop anaerobic conditions in the upper layer. Biological activities in saturated soil result in reduced oxygen concentrations that result in a preponderance of organisms using anaerobic processes for metabolism. Over time, anaerobic biological processes result in certain soil color patterns, which are used as field indicators of hydric soil. Typically, low-chroma colors are formed in the soil matrix. Bright-colored redoximorphic features form within the matrix under a fluctuating water table. Other important hydric soil indicators include organic matter accumulations in the surface horizon, reduced sulfur odors, and organic matter staining in the subsurface. Soils were examined by excavating sample plots to a depth of 18 inches or more to observe soil profiles, colors, and textures. Munsell color charts (Gretag Macbeth 2000) were used to describe soil colors.

2.2.1.3 Hydrology

The project area was examined for evidence of hydrology. An area is considered to have wetland hydrology when soils are ponded or saturated consecutively for 12.5 percent of the growing season. The growing season (Seattle Tacoma station) generally occurs from early February (February 7) to early December (December 8) (Snyder et al. 1973); ponding or saturation must be present for approximately 38 consecutive days at 28 degrees Fahrenheit. Primary indicators of hydrology include surface inundation, sediment deposits, high water table, and saturated soils. Secondary indicators of hydrology include drainage patterns, watermarks on vegetation, and water-stained leaves.

2.2.2 Wetland Classification and Rating

Delineated wetlands were classified according to the USFWS *Classification of Wetlands and Deepwater Habitats of the United States* (Cowardin et al. 1979). The Washington State Wetland Rating System for Western Washington – Revised was used to rate wetlands (Hruby 2004) (Attachment D). The City of Bellevue has adopted the Washington State Wetland Rating System for the City of Bellevue Land Use Code (LUC 20.25H.095). Although the Washington State Department of Ecology (Ecology) updated the wetland rating system in 2014 (Hruby 2014), the ratings have not been updated in this report because the wetland delineations were conducted prior to 2015—the effective date of the new rating system. Table 2-2 summarizes the state and city rating criteria for each wetland category.

Table 2-2. Criteria for Wetland Rating Categories as Specified by Ecology and the City of Bellevue

Category	Ecology[a]	City of Bellevue[b]
Category I	Wetlands of exceptional value in terms of protecting water quality, storing floodwater and stormwater, and/or providing habitat for wildlife as indicated by a rating system score of 70 points or more. These are wetland communities of infrequent occurrence that often provide documented habitat for sensitive, threatened, or endangered species and/or have other attributes that are very difficult or impossible to replace if altered.	Category I wetlands are those that (a) represent a unique or rare wetland type; or (b) are more sensitive to disturbance than most wetlands; or (c) are relatively undisturbed and contain ecological attributes that are impossible to replace within a human lifetime; or (d) provide a high level of functions.
Category II	Wetlands that have very important resources as indicated by a rating system score of between 51 and 69 points. These wetlands occur more commonly than Category I wetlands but still require a high level of protection.	Category II wetlands are difficult, though not impossible, to replace, and provide high levels of some functions. These wetlands occur more commonly than Category I wetlands, but still need a relatively high level of protection. Category II wetlands in Western Washington include wetlands scoring between 51 to 69 points (out of 100) on the questions related to the functions present. Wetlands scoring 51 to 69 points were judged to perform most functions relatively well, or performed one group of functions very well and the other two moderately well.
Category III	Wetlands that have important resource value as indicated by a rating system score of between 30 and 50 points.	Category III wetlands have a moderate level of functions (scores between 30 and 50 points). Wetlands scoring between 30 and 50 points generally have been disturbed in some ways, and are often less diverse or more isolated from other natural resources in the landscape than Category II wetlands.
Category IV	Wetlands that are of limited resource value as indicated by a rating system score of less than 30 points. They typically have vegetation of similar age and class, lack special habitat features, and/or are isolated or disconnected from other aquatic systems or high quality upland habitats.	Category IV wetlands are over 2,500 square feet. They have the lowest level of functions (scores less than 30 points) and are often heavily disturbed. These are wetlands that can be replaced and in some cases improved. However, experience has shown that replacement cannot be guaranteed in any specific case. These wetlands may provide some important functions, but they also need to be protected.

[a] Hruby (2004).
[b] City of Bellevue Land Use Code (20.25H.095) (December 2009).

2.2.3 Stream Identification and Rating

A stream is defined by the City of Bellevue as an aquatic area where surface water produces a channel, not including a wholly artificial channel, unless the artificial channel is:

1. Used by salmonids; or
2. Used to convey a stream that occurred naturally before construction of the artificial channel (LUC 20.25H.075).

2.2.4 Habitat Associated with Species of Local Importance

According to City of Bellevue regulations, "*Habitat (other than the critical areas and critical area buffers otherwise designated in LUC 20.25H.025) associated with species of local importance is hereby designated a critical area; provided, that compliance with these species of local importance regulations, LUC 20.25H.150 through LUC 20.25H.170 inclusive, shall constitute compliance with the requirements of this part where such habitat is located outside of other critical areas designated in this part.*"

Primary association areas for critical species were identified using data provided by the PHS database, species lists provided by the USFWS, and Natural Heritage information provided by DNR (2011) and WDFW (2015).

A formal habitat assessment was conducted in February 2015 using the *Guidance: Bellevue Urban Wildlife Habitat Functional Assessment Model* (The Watershed Company 2010) and the *Bellevue Urban Wildlife Habitat Literature Review* (The Watershed Company 2009).

2.2.5 Other Critical Areas

Other critical areas such as shorelines, geologic hazards, and special flood hazards are described below.

2.2.5.1 Shorelines

No shorelines occur within the project area.

2.2.5.2 Geologic Hazards

Landslide hazards, steep slopes, and coal mine hazards are regulated under LUC 20.25H.120.

No naturally occurring landslide hazards or coal mine hazards occur within the regional pond site. All slopes are either artificially engineered fill slopes or have been modified by past development.

2.2.5.3 Special Flood Hazards

No naturally occurring floodplain exists in the project area, although the regional detention facility regulates discharge during flood events. In addition, the facility is not included on City of Bellevue Federal Emergency Management Agency (FEMA) maps; thus, it does not qualify as a special flood hazard under City of Bellevue code.

3. HABITAT ASSESSMENT

3.1 Summary of Existing Information

The NWI (Attachment A) identifies one wetland complex in the project area. It is mapped as a seasonally flooded palustrine forested and a permanently flooded palustrine aquatic bed wetland complex. This mapped wetland complex is located in Wetland 1.

According to WDFW PHS data, a palustrine wetland is located in the vicinity of Wetland 1. One mapped stream (West Tributary of Kelsey Creek) is found within the project area (King County 2011; WDFW 2015), which extends upstream to the west and downstream towards Bel-Red Road (see Sections 3.3 and 3.4 for further details).

Urban land, Everett gravelly sandy loam (5 to 15 percent slopes), Seattle muck, and Alderwood gravelly sandy loam (6 to 15 percent slopes) are mapped throughout the majority of the project area (NRCS 2011) (Attachment A). Additional information on soils is provided in Section 3.2.3.

3.2 Site Characteristics

Characteristics of the project area, including soils, vegetation, and watersheds, are described below. Photographs of the project area are included in Attachment B.

3.2.1 Watershed and Topography

The project site is in the Puget Sound Trough, which is a broad lowland located between the western Cascades and the Olympic Peninsula with a history of extensive glaciation. Glacial processes created the landforms in this region and provide base material for the soils. The landforms of the region typically comprise a series of north-south trending ridges and valleys showing the direction of glacial advance. During their advances and retreats, the glaciers deposited a thick layer of unsorted material, including clays, silts, sands, gravels, and boulders. This material, which is commonly called till, can be several thousands of feet thick in some areas (Alt and Hyndman 1984). The glaciers retreated approximately 20,000 years ago, leaving rivers, streams, and lakes occupying the low-lying areas, while depositing loose materials. Stream-deposited materials are called alluvium, and lakebed deposits are called lacustrine deposits. As these parent materials eroded and broke down, they formed the soils of the region. Some of the soils are poorly drained or impede infiltration of water, which leads to the formation of wetlands. These soils are considered to be hydric (wetland) soils. Other freer draining soil types (called non-hydric soils) support upland habitats. Within these two general soil groups, a number of individual soil series or types occur.

Puget Sound is located within the western hemlock forest zone described in *Natural Vegetation of Oregon and Washington* (Franklin and Dyrness 1988). Western hemlock (*Tsuga heterophylla*) and western red cedar (*Thuja plicata*) are the dominant upland forest species in this zone, although Douglas fir is also very common.

The portion of the Kelsey Creek basin with the West Tributary covers 1,006 acres and is located in an urbanized area (within the city of Bellevue). Approximately 46 percent of the land cover within the basin is impervious surface. Chinook salmon (*Oncorhynchus tshawytscha*), sockeye salmon (*O. nerka*), and coho salmon (*O. kisutch*), as well as cutthroat trout (*O. clarkii*), are documented within the basin. The

total length of open channel is 15,430 feet and ranges in elevation from 496 feet to 26 feet (City of Bellevue 2009) (Attachment A). The basin generally extends from north of State Route (SR) 520 to just north of I-90, east of the I-405 corridor.

3.2.2 Hydrology

Existing hydrology (outflow) is controlled by the invert elevations of an outlet structure and two abandoned beaver dams; inflow is controlled by upstream control structures. The site currently has three areas of inundation: the open water pond adjacent to the outlet structure, and two backwater areas just upstream of the beaver dams. The backwater areas are inundated for long periods during the winter and spring. The area closest to the outlet maintains an open-water pond year-round. Additional details on the operation of the pond, inundation areas, and the fluctuating water levels are presented in the 2012 Design Report (SAIC 2012).

3.2.3 Soils

Urban land and Everett gravelly sandy loam, 5 to 15 percent slopes, are mapped throughout most of the project area (NRCS 2011) (Attachment A). However, hydric soils were observed in Wetland 1. The soils observed in the project area appear to have been historically disturbed. Urban land is soil that has been modified by disturbance of the natural layers with additions of fill material and housing developments (NRCS 2011).

The Alderwood series comprises moderately well-drained, undulating to hilly soils that have dense glacial till at a depth of 20 to 40 inches that permeates at slow levels on uplands and terraces (NRCS 2011).

The Everett series comprises excessively drained soils that are underlain by very gravelly sand at a depth of 18 to 36 inches. These soils formed in very gravelly glacial outwash deposits under conifers (NRCS 2011).

The Seattle series comprises very poorly drained organic soils that formed in material derived primarily from sedges. These soils are in depressions and valleys on the glacial till plain and also in the river and stream valleys (NRCS 2011).

3.2.4 Vegetation

Vegetation within the vicinity of the project area consists of both wetland and upland species. The dominant wetland species are reed canarygrass (*Phalaris arundinacea*) and broadleaf cattail (*Typha latifolia*). The central portion of the project area contains wetland vegetation as described in Section 3.3.1. Purple loosestrife (*Lythrum salicaria*) is scattered throughout the wetland.

Upland plant communities within the project area consist primarily of upland forest and herbaceous vegetation. The forested communities are dominated by red alder (*Alnus rubra*), bigleaf maple (*Acer macrophyllum*), Himalayan blackberry (*Rubus armeniacus*), and Scot's broom (*Cytisus scoparius*).

The DNR Natural Heritage Program does not identify any rare plants within or in the vicinity of the project area.

3.2.5 Priority Habitats

The WDFW PHS data maps indicate two priority habitats in the project area: a palustrine wetland, and the West Tributary of Kelsey Creek. The wetland is located in the vicinity of Wetland 1. No other priority habitats are indicated in the project area.

3.3 Wetlands

One wetland (Wetland 1) was identified in association with the West Tributary of Kelsey Creek in the project area. Its wetland hydrology, plant communities, wildlife habitats, and soil characteristics are described below, including the wetland buffer. Wetland determination data forms are included in Attachment C.

3.3.1 Wetland 1

Size: 5.8 acres
Bellevue and Ecology Rating: Category II
Buffer: 75 feet
USFWS Classification: Palustrine forested\scrub-shrub\emergent\open water
HGM Classification: Riverine\depressional
Sample Plots: W1-SP1, W1-SP2 (Attachment C)

Wetland 1 is associated with the West Tributary of Kelsey Creek and is located east of 124th Avenue NE and north of NE 14th Street (Figure 3-1). It is a relatively large (5.8 acres) flow-through depressional wetland associated with the West Tributary Detention Pond.

The source of wetland hydrology is primarily the West Tributary of Kelsey Creek. However, the water level in the wetland is controlled by a flow control structure located at the southeastern end of the wetland. Also, two abandoned beaver dams influence water flow through the site providing increased inundation upstream or behind the dams. Surface water is evident throughout the wetland year-round, but the outer edges of Wetland 1 are occasionally saturated.

Wetland 1 is composed primarily of a palustrine emergent community, scattered patches of scrub-shrub, and open water with a forested community edge. Vegetation is dominated primarily by reed canarygrass. Other vegetation observed in Wetland 1 includes common cattail, rose spirea (*Spiraea douglasii*), Pacific willow (*Salix lasiandra*), Sitka willow (*Salix sitchensis*), small-fruited bulrush (*Scirpus microcarpus*), red-osier dogwood (*Cornus sericea* ssp.), and common rush (*Juncus effusus*). The northwestern end of the wetland is dominated by reed canarygrass with small pockets of shrubs. The southeastern end of the wetland has an open-water feature surrounded primarily by common cattail and Pacific willow. Generally, the fringes of the wetland contain more plant diversity.

Because of surrounding urban land use with limited habitat connectivity, Wetland 1 provides only moderate levels of general wildlife habitat. It provides high levels of aquatic invertebrate and amphibian habitat due to high vegetation and inundation interspersion. It also provides moderate mammal habitat, because of the presence of permanent water within Wetland 1. However, it lacks sufficient woody vegetation to provide a high-functioning mammal habitat. Moderate wetland-associated bird habitat functions are provided because Wetland 1 has the necessary open water and vegetation. Fish habitat is provided because fish-bearing waters are associated with Wetland 1 and fish were observed within the project area. Additionally, Wetland 1 provides high levels of native plant richness and habitat interspersion functions.

Soil in Wetland 1 (W1-SP1) was examined to a depth of 19 inches, which consisted of two layers. The top layer is a 12-inch layer of black (10Y 2/1) silty muck. Below is a layer composed of a dark gray (2.5Y 4/1) silty loam. Soils in the wetland are primarily mapped by the NRCS as Everett gravelly sandy loam, 5 to 15 percent slopes.

Wetland 1 is a palustrine forested\scrub-shrub\emergent\open water wetland under the Cowardin (1979) system and a depressional/riverine wetland under the hydrogeomorphic (HGM) system (Brinson et al. 1995). The wetland is rated a Category II wetland according to the City of Bellevue (LUC 20.25H.095B). The wetland scored 60 points on the Ecology (Hruby 2004) rating form for Western Washington and is rated a Category II (18 points for water quality, 24 points for hydrologic functions, and 18 points for habitat functions) (Attachment D). The wetland rating was not updated to the 2015 Ecology rating system (Hruby 2014) because the wetland delineation occurred in 2011. The City of Bellevue requires a 75-foot standard buffer for Category II wetlands (LUC 20.25H.095C).

3.3.2 Wetland Buffer

The buffer of Wetland 1 consists of generally developed areas and forested slopes. Vegetation in the generally forested buffer includes red alder, bigleaf maple, Indian plum (*Oemleria cerasiformis*), Himalayan blackberry, and English ivy (*Hedera helix*). Most of the vegetated buffers are on generally steep and narrow slopes. The buffer north of the wetland is dominated by large conifers, including Douglas fir (*Pseudotsuga menziesii*) and western red cedar. The buffer west of the wetland is dominated by red alder and Himalayan blackberry and a large number of trees have had their tops blown down. The herbaceous vegetation is composed of western swordfern (*Polystichum munitum*), grasses, and weedy species. Disturbances were observed in several locations within the buffer of the wetland. They included yard waste, trash, and minor erosion from stormwater outfalls. Nearly the entire buffer is influenced by impervious surfaces.

The buffer of Wetland 1 does not likely support a variety or abundance of wildlife species, because of the disturbed nature of the surrounding area, abundance of invasive plant species, and the surrounding land use. Wildlife habitat on the subject property has been affected by development and commercial use of the property and surrounding area. The buffer might be expected to experience use by a variety of resident and migratory birds, as well as reptiles and small-sized mammals, such as mice, raccoons, and squirrels. There are no documented critical wildlife species that utilize this habitat. Because of the condition of the buffer, wildlife utilization is expected to be relatively low and not very diverse.

3.3.3 Wildlife Habitat Functions

Species of local importance are listed in LUC 20.25H.150. Of these, only the red-tailed hawk (*Buteo jamaicensis*) and great blue heron (*Ardea herodias*) were observed in the project area. No other species of local importance were identified in the project area.

No federally or state-listed aquatic species, or other species of concern, are documented for the West Tributary of Kelsey Creek within the project area. Sockeye, Chinook, and coho salmon and cutthroat trout are documented approximately 0.3 mile downstream in a portion of the West Tributary of Kelsey Creek, south of Bel-Red Road. Puget Sound Chinook salmon are listed as threatened under the ESA. Chinook and coho salmon are listed as species of local importance in LUC 20.25H.150.

LEGEND

POW	PALUSTRINE OPEN WATER WETLAND
PEM	PALUSTRINE EMERGENT WETLAND
PSS	PALUSTRINE SCRUB-SHRUB WETLAND
PFO	PALUSTRINE FORESTED WETLAND
SS	UPLAND SCRUB-SHRUB
FO	UPLAND FOREST
— — —	WETLAND BOUNDARY / ORDINARY HIGH WATER MARK

Parametrix DATE: July 26, 2012 FILE: FIG1

N

0 120'

SCALE IN FEET

Figure 3-1
Existing Habitat Conditions West Tributary Kelsey Creek DMP 165 Wetland Restoration Project

City Of Bellevue

In addition, PHS data did not list any priority species with nests in the project area. The Natural Heritage data showed no federal- or state-listed endangered, threatened, or critical species (WDFW 2015).

Some wildlife species were observed within the project vicinity during the site visit, most of which are commonly found in urban areas, such as mallard (*Anas platyrhynchos*), red-winged blackbird (*Agelaius phoeniceus*), cliff swallow (*Petrochelidon pyrrhonota*), American goldfinch (*Carduelis tristis*), sharp-shinned or Cooper's hawk (*Accipiter* sp.), house finch (*Carpodacus mexicanus*), European starling (*Sturnus vulgaris*), great blue heron (*Ardea herodias*), red-tailed hawk (*Buteo jamaicensis*), black-capped chickadee (*Poecile atricapillus*), house sparrow (*Passer domesticus*), western tanager (*Piranga ludoviciana*), cedar waxwing (*Bombycilla cedorum*), northern flicker (*Colaptes auratus*), barn swallow (*Hirundo rustica*), and American crow *(Corvus brachyrhynchos)*.

There is no documented waterfowl wintering sites or large concentrations on the site (WDFW 2015). Scattered waterfowl (mallard duck and cinnamon teal [*Anas cyanoptera*]) were observed during the 2011 site investigation. However, other migratory water fowl, such as various ducks and geese, may be present within the vicinity of the site at other times of the year.

To support the reporting requirements specified in LUC 20.25H.165, a wildlife habitat assessment was conducted to describe the wildlife habitat on the site. Functional assessment ratings were based on observations during a site visit conducted by Mike Hall and Jeff Meyer of Parametrix on February 10, 2015, employing the general methodology outlined in Using the Bellevue Urban Wildlife Habitat Functional Assessment Model (revised February 2010). An on-site analysis of vegetation structure and composition was conducted during the site visit. The presence of habitat features and the extent of human disturbance were also observed. Information collected during that visit was supplemented by information from wetland delineations conducted in August 2011. The wildlife habitat assessment report will be submitted under separate cover.

The total wildlife habitat functional assessment score for the site is 41.5 (out of a possible total of 50 or more), which is considered indicative of high-value wildlife habitat areas in the city of Bellevue. A variety of wildlife species can be expected to use habitats on the site and in the surrounding area.

The landscape parameters score for the site is 14 points (out of a possible total of 19), indicating that it has the opportunity to support wildlife. The lowest individual score in this category is for Habitat Connectivity. Although several habitat areas are available within the 250-acre landscape evaluation area, connections with those patches are limited by the site's location in a heavily developed industrial area in the Bel-Red corridor. All habitat patches in the landscape evaluation area are separated from one another by roads, buildings, parking lots, and other travel barriers. It is worth noting that connectivity may improve when the 124th Avenue NE Improvements project is completed. That project will include the installation of a fish and wildlife crossing structure where the West Tributary of Kelsey Creek passes beneath 124th Avenue NE.

The local parameters score of 27.5 points for the site (out of a possible total of 38 or more) indicates the capacity to support a diverse wildlife community. Factors with substantial potential for habitat improvement are low tree canopy (most of the pre-existing forest cover on the parcel has been lost due to inundation) and the extensive presence of invasive species (primarily reed canarygrass).

Because the proposed project consists of a restoration plan with the goal of enhancing and restoring wetland and wetland buffer areas on the site, no adverse effects on wildlife habitat are anticipated and no additional restoration measures will be required. More detailed information about the restoration

plan, including goals and objectives as well as plans for monitoring and adaptive management, are provided in the following sections.

3.4 Streams

One stream (the West Tributary of Kelsey Creek) was identified in the vicinity of the project area during the site investigation.

3.4.1 West Tributary of Kelsey Creek

Upstream of the project site, the West Tributary of Kelsey Creek flows east within a confined channel located south of NE 18th Place, within the King County Metro parking facility, and west of 124th Avenue NE. Here the banks of the stream are relatively steep and vegetated with red alder, Himalayan blackberry, and red-osier dogwood. Some areas of reed canarygrass were observed within the stream channel.

The West Tributary of Kelsey Creek enters the project area through a control structure and 48-inch-diameter culvert under 124th Avenue NE. The stream has a defined channel for approximately 200 feet before becoming braided and diffused. After about the first 50 feet, the channel becomes narrow with degraded but discernible banks. Vegetation along this reach is dominated by reed canarygrass. The stream then flows through Wetland 1 (West Tributary regional pond) and exits the project area via the dam and flow control structure at the southeast end of the project site. Southeast of the dam and flow control structure, the stream becomes channelized and has a defined bed and bank. This reach is subject to a separate stream restoration project in the future.

Downstream of this upper reach, the stream enters a culvert where it is conveyed below ground for approximately 1,100 feet south of Bel-Red Road. Downstream of its crossing under Bel-Red Road, the West Tributary of Kelsey Creek joins Goff Creek, which is a tributary to Kelsey Creek. Goff Creek eventually connects to Kelsey Creek, which drains through Mercer Slough and into Lake Washington (Parsons Brinckerhoff 2011).

3.4.2 Fish Use

According to the City of Bellevue, the West Tributary of Kelsey Creek (08-0264) is used by sockeye, Chinook, and coho salmon, including migratory and resident cutthroat trout. Peamouth (*Mylcheilus caurinus*) have been documented as far upstream as the Kelsey Creek farm, where they spawned in 2005. Largescale suckers (*Catostomus macrocheilus*) have also been observed in this creek by volunteers. The upstream limit of migratory fish use appeared to be Bel-Red Road. In 2001, electrofishing on both sides of 124th Avenue NE yielded no fish, although a Pacific giant salamander (*Dicamptodon*) was caught. Habitat characteristics along some reaches included sluggish flow through pools that were several hundred feet long, apparently created by beaver activity. Substrate consisted of a thick silt layer. Farther upstream, at 120th Avenue NE, the stream consisted of isolated pools with thick silt substrate. Fish were also absent in this segment. No fish were found in the tributary at NE 8th Street in 2001. This tributary was a sequence of tiny pockets of water, each less than 2 inches deep (City of Bellevue 2009). PHS data indicate that cutthroat trout are present in the West Tributary of Kelsey Creek in the project area (WDFW 2015).

Cutthroat trout were observed during one site visit in 2011. One deceased cutthroat trout was found immediately southeast of and below the dam and flow control structure at the southern end of the

project area. This observation suggests that additional studies may be warranted. Also, an unidentified fish was observed near the inlet culvert at the northwestern end of the project area.

3.5 Species of Local Importance

According to PHS data, there are no priority species or nests located within the project area. Two species of local importance were observed in the project area. A red-tailed hawk was observed perching on a snag in Wetland 1 on multiple site investigations and a great blue heron was observed foraging in Wetland 1 on one occasion. The on-site habitats being used by these two species of local importance are contained within other critical areas, including wetlands and their buffers.

4. IMPACT ASSESSMENT

The proposed project is designed to restore wetland habitat functions in the West Tributary Detention Pond area. It is being implemented in collaboration with the City of Bellevue Utilities Department and Parks & Community Services Department. The intent of the restoration plan is to use low-intensity landscape features and planting techniques. Impacts on wetlands and other critical areas will be minimized during design and construction of the project. This report demonstrates compliance with critical area regulations.

4.1 Impacts on Critical Areas

The project would not result in any negative permanent impacts on critical areas; instead, the project would be beneficial to the wetlands in the project area. Any temporary impacts during construction would be restored after construction.

A future regional trail system has been proposed for the detention pond area. This would be a separate project and is not included in this report because the restoration project will avoid the proposed trail alignment.

Temporary impacts will be limited to construction access points and matted pathways through portions of the wetlands to reach planting areas. All work will be consistent with City of Bellevue Environmental Best Management Practices. For example, the control of reed canarygrass prior to planting will use City best management practices (BMPs) as described in Section 5.2.4.6 of this report. The restoration will not change the hydrologic function of the detention pond facility. The restoration plan (described in Section 5) has been designed to meet the requirements of LUC 20.25H.210.

5. RESTORATION PLAN

This restoration plan has been developed to restore wetland habitats in the detention pond area. The restoration plan is consistent with LUC 20.25H.215.G, Mitigation for City Park Projects, because the project is being implemented in collaboration with the City of Bellevue Parks & Community Services Department. Negative impacts on wetlands and other critical areas will be minimized during construction of the project.

As noted above, a regional trail may be constructed in the project area in the future. Compensatory mitigation for trail shading impacts (0.50 acre) in the future on Category II wetlands would be needed at the standard mitigation-to-impact ratio of 3:1 in accordance with LUC 20.25H.105.C. Therefore, a 1.5-acre area suitable for wetland enhancement will be left in its current condition to be used as mitigation for future trail impacts.

The following sections describe the goals and objectives, performance standards, construction plan, planting plan, monitoring plan, maintenance plan, contingency plan, and performance security for the project. A more detailed restoration plan, including specifications, is included in the set of 50% design drawings to be submitted under separate cover.

5.1 Minimization Measures

The project design incorporates restoration and construction measures to minimize impacts on wetlands and buffers. Key minimization measures for this project are:

- The mature overstory in the buffer, including significant trees, along the edges of the pond is valuable ecologically and will be preserved.
- Access points and pathways will be kept as narrow as possible.

5.2 Goals and Objectives

5.2.1 Long-Term Goal

The long-term goal for the site is to restore habitat functions to other degraded wetland areas. This goal will be achieved by planting woody species to form both forested and scrub-shrub wetland habitats, which were previously found in the detention pond area. Upland buffers will also be planted with native species that provide protection to the wetland from adjacent land uses. It is not realistic to expect that all the ecological functions will accrue within 5 years; however, the site should be providing important habitat functions in approximately 5 years. If monitoring reveals that the site is being successfully established within the first 5 years, the plant communities would likely continue to thrive and develop into complex ecosystems, provided beaver predation is not excessive.

5.2.2 Performance Standards

The overall goal of this restoration plan is to enhance and restore a total of approximately 0.9acre of scrub-shrub and forested wetland and enhance approximately 0.5 acre of upland buffer. The restored and enhanced wetland and buffer areas are intended to provide a variety of ecological functions, including maintaining characteristic vegetation community and wildlife habitat support for passerine birds, small mammals, and amphibians.

To achieve these intended ecosystem functions, the restoration plan is designed to meet specific objectives. To ensure that these objectives are achieved, a series of performance (success) standards must be met within the monitoring period. These objectives and performance standards are described below.

5.2.3 Restoration Objectives

Objective 1: Restore palustrine emergent wetland dominated by reed canarygrass with a diversity of vegetation structure

Performance Standards:

Year 1

- Breach two beaver dams to drain flooded backwater areas for planting.
- Plant 0.9 acre of emergent wetland with native trees and shrubs.
- Achieve 80 percent survival of planted woody species at the end of the first year plant establishment period. If commensurate dead planted material is replaced, the success standard will be met.

Year 3

- Achieve at least 50 percent native woody cover in the planted wetland areas.

Year 5

- Achieve at least 70 percent native woody cover in the planted wetland areas.

Objective 2: Plant upland buffer to enhance vegetation structure

Performance Standards:

Year 1

- Plant 0.5 acre of enhanced buffer with native trees and shrubs.
- Achieve 100 percent survival of planted woody species at the end of the first year plant establishment period. If all dead woody species plantings are replaced, the Year 1 success standard will be met. The replanting may not be completed and documented until after the year one monitoring report is submitted.

Year 3

- Achieve at least 80 percent survival of native woody species planted in upland buffer areas.

Year 5

- Achieve at least 70 percent survival of native woody species in the planted upland buffer areas.

5.2.4 Construction Plan

5.2.4.1 Proposed Schedule

The restoration plan is assumed to be constructed in one phase. Site preparation activities will begin in the summer following permit issuance. Planting will occur during the spring of the following year.

Prior to any site work, a pre-construction meeting will be held with the general contractors, landscape contractors, and biologists to ensure that the work is constructed as designed, and that contractors understand and comply with all environmental permit conditions. The wetland biologist will be available for on-site inspections and approval of all work during construction.

5.2.4.2 Hydrology

The restoration opportunities at the site are currently limited because of extensive and prolonged inundation as a result of facility operation and two abandoned beaver dams. In the past beavers have had a profound impact on the vegetation communities and hydrology in the detention pond area. The forest canopy has been removed by beaver browsing and from prolonged inundation. Two beaver dams have created backwater areas that prevent the re-establishment of woody species. The restoration plan will include key modifications to the site hydrology while maintaining the storage capacity of the detention facility, including:

- Design hydrology to summer water elevation of 129 feet (to preserve open water in the pond in summer and water for the downstream reach)
- Breach both beaver dams in two to five locations (number and size of breaches to be determined in the field)

5.2.4.3 Earthwork

No earthwork is proposed as part of the restoration plan. It is expected that after the water levels are lowered, weeds are controlled, as described below, and other planting techniques are implemented, suitable areas will be available for planting.

5.2.4.4 Temporary Erosion and Sediment Control

Standard sediment fences will be placed along the edges of access roads to prevent soil erosion and sedimentation to adjacent wetland areas. High visibility construction fencing will be placed at the edge of work areas to ensure that activities do not extend beyond the approved work area. A clear access work area will be established in the field by the contractor prior to beginning any earthwork.

5.2.4.5 Habitat Features

In the existing detention pond area there are numerous downed logs providing habitat for turtles and waterfowl. In addition, several dead snags are providing habitat for woodpeckers and other sapsucker species. Old beaver dams also provide habitat for a variety of birds and amphibians. As a result, the restoration plan does not include additional downed or standing wood.

5.2.4.6 Weed Control

Prior to installing new plant material, noxious weeds in the wetland and its buffer will be removed. The existing site has a variety of weed species that could spread and limit the success of the restoration plan. In the wetlands area purple loosestrife will be located and removed to the greatest extent practicable. Because this species can spread quickly, its removal is a high priority. However, because of inundated and\or saturated soils, access to all purple loosestrife populations may not be possible. Common nightshade (*Solanum dulcamera*) and yellow flag iris (*Iris pseudacorus*) are also common in the detention facility. Both species can outcompete desirable native species; therefore, they will be removed by hand where discrete manageable patches are found and can be accessed.

Reed canarygrass dominates the northern half of the site. Control strategies will include pre-construction herbicide application and the rapid establishment of a dense cover of flood-tolerant native species. Although heavy mulch has been shown to suppress the re-sprouting of reed canarygrass (Antieau 1998; WSDOT 2008), it is not proposed because of heavy winter flooding that potentially could redistribute the mulch and possibly clog the dam control structures. In planting areas, reed canarygrass will be controlled using a combination of mowing (using portable weed eaters) and approved herbicide in accordance with the City of Bellevue's BMPs and the state's requirements for herbicidal applications near water. In general, the following sequence of control treatments will reduce reed canarygrass cover and vigor sufficiently to enhance woody plant establishment:

- Lower water elevations in the pond, temporarily, to 128 feet or less, if practicable
- Stake planting areas
- Mow or 'weed eat' the designated planting areas
- Allow re-sprouting of reed canarygrass to approximately 1 foot
- Spray with approved herbicide
- Optional—re-spray with approved herbicide after 1 foot of regrowth
- Plant no sooner than 30 days after herbicide application

This sequence can be modified by the City of Bellevue to best meet site conditions at the time of construction. Details of the weed control plans are included in the plan set.

In the upland buffer, blackberry (*Rubus* spp.), English ivy, and Scot's broom are prevalent. These species, as well as other noxious weeds on the King County, Washington, list of noxious weeds, will be controlled using herbicide applications or hand removal measures. In buffer planting areas, these species will be completely removed prior to planting.

5.2.4.7 Planting Plan

Following site preparation activities, the restoration area will be planted with native woody vegetation as shown in the plan set. The intent of the planting plan is to create patches or islands of dense woody vegetation. Tree and shrub patches will be planted on slightly higher elevations in the wetland restoration area as shown on the plans. Overall planting areas will be planted at twice the typical density with the expectation that half of the plant material will not survive. This strategy will be used because of expected high water levels and potential beaver predation on plants. Tree species such as Pacific willow, Sitka willow, and black cottonwood (*Populus trichocarpa*) will be planted as live stakes or live poles to promote a rapidly established dense canopy that will help to suppress reed canarygrass (Table 5-1).

Shrubs will be installed in clusters. In addition, live stakes will be driven through coir logs or coir wattles to provide an undisturbed environment for root development and establishment.

Table 5-1. Planting List

Common Name	Scientific Name	Indicator Status
Scrub-shrub Wetland Community (Palustrine Scrub-Shrub)		
Red-osier dogwood	*Cornus alba*	FACW
Sitka willow	*Salix sitchensis*	FACW
Douglas spirea	*Spirea douglasii*	FACW
Pacific ninebark	*Physocarpus capitatus*	FACW
Black twinberry	*Lonicera involucrata*	FAC
Forested "Pockets" (Palustrine Forested)		
Black cottonwood	*Populus balsamifera ssp. trichocarpa*	FAC
Oregon ash	*Fraxinus latifolia*	FACW
Western crabapple	*Malus fusca*	FACW
Pacific willow	*Salix lucida var. lasiandra*	FACW
Sitka willow	*Salix sitchensis*	FACW
Buffer Restoration		
Douglas fir	*Pseudotsuga menziesii*	FACU
Western red cedar	*Thuja plicata*	FAC
Western hemlock	*Tsuga heterophylla*	FACU
Bigleaf maple	*Acer macrophyllum*	FACU
Sitka spruce	*Picea sitchensis*	FAC
Beaked hazelnut	*Corylus cornuta*	FACU

The upland buffer areas will be planted to increase the diversity and structure in the buffer. Tree species will include Douglas fir, bigleaf maple, western red cedar, Sitka spruce (*Picea sitchensis*), and western hemlock. These trees will be field located and planted in the designated buffer planting areas.

5.3 Monitoring Plan

The restoration site will be monitored for a minimum of 5 years. Monitoring reports will be submitted for review on the following schedule:

- Thirty days after completion of the restoration project (submittal of as-built report)
- End of the first growing season after construction
- End of the calendar year annually after the second year

Successful restoration will be measured by attainment of the performance standards described above. Specific monitoring will include, but not be limited to, a discussion of wildlife usage of the site, vegetation establishment, wetland hydrology, weed populations, and site disturbances.

Total percent areal cover and species distribution will be measured using the line intercept method. The percent cover of woody plant species will be totaled to estimate total percent woody cover. The percent cover of non-native plant species will also be estimated. Total percent survival of woody species will be estimated in representative sampling plots.

5.4 Contingency Plan

It is anticipated that the restoration goal will be achieved with the construction and installation of the restoration design as shown on the plan set. However, contingency actions may be needed to correct unforeseen problems. Possible contingency measures are described below.

5.4.1 Hydrology

Failure to establish suitable hydrology in the wetland areas could be rectified by implementing one or more of the following potential contingency actions:

- Determine the cause of excessive or inadequate hydrology
- Adjust weir operations to modify water depths, if possible
- Remove and/or breach newly constructed beaver dams
- Remove beavers

5.4.2 Vegetation

Failure to meet the proposed vegetation performance standards could result in some or all of the following contingency actions:

- Plant additional vegetation—Additional vegetation planting may be needed to meet cover or plant survival standards. Plant species will be evaluated in relation to site conditions to determine if plant substitutions are necessary.
- Weed control—Control of competitive weed species, particularly reed canarygrass, may be required if weed cover is limiting attainment of plant survival or cover standards. Methods of weed control could include hand or mechanical weeding, herbicide application, or mulching.
- Herbivore control—If vegetation cover or survival standards are not met because of animal browse, particularly beavers, then the responsible wildlife will be identified and appropriate damage control methods employed. Possible control methods include fencing, use of repellents, trapping, and temporary barriers.
- Irrigation—Plantings in the buffers may require supplemental irrigation beyond the 1-year plant warranty period, especially in summer. Irrigation could occur from the nearby property owned by the City or by using water trucks following established access routes.

5.4.3 Beaver Control Plan

After planting of the restoration areas and during the 5-year monitoring period, a beaver control plan could be implemented if the monitoring results show a distinct relationship to poor vegetation establishment. The plan will be developed with the goal of minimizing beaver damage to the plantings

and to ensure that the regional detention facility continues to operate effectively. Potential elements of the plan could include:

- Monitoring vegetation mortality
- Breaching new beaver dams
- Removing beavers
- Consulting with WDFW on beaver control methods

5.5 Maintenance and Adaptive Management

Following construction of the wetland restoration site, oversight will be required to ensure the long-term success of the project. The goal of the proposed restoration is to create a functional, self-sustaining system that requires little or no long-term maintenance. Wetland restoration sites are dynamic systems that can evolve rapidly as site conditions change. Projects that require modification to soils, plant communities, topography, and/or hydrology do not always respond as predicted; therefore, the principles of adaptive management will be used to guide wetland management activities after construction.

Adaptive management is driven by the monitoring objectives to achieve the desired condition of a site. If the monitoring objectives are not met, adaptive management activities would be planned to achieve the desired condition. Management activities may include implementation of contingencies described above, or other activities as appropriate.

During the monitoring period, regularly scheduled maintenance activities such as removing noxious weeds, repairing vandalism, and collecting trash will occur on a semi-annual basis for the first 3 years. Depending upon the success of the plant establishment, maintenance activities may be needed annually in Years 4 and 5.

Access to the site for maintenance activities shall occur from City property or right-of-way, or be obtained by the City from adjacent property owners for the duration of the monitoring and maintenance period.

The buffer that encircles the wetland area contains large conifer and deciduous trees. The buffer is adjacent to public and private facilities. As trees mature they are susceptible to disease and weather-related events. Some trees may become diseased and become a hazard to public safety. LUC 20.25H.055 includes regulations regarding management of hazardous trees. These regulations should be followed if hazardous trees are proposed for removal.

A long-term beaver control plan may also be needed after the 5-year monitoring period, if determined to be necessary by the City. This long-term plan could include the elements listed in Section 5.4.3, or other techniques that have been developed by WDFW or by the City from other projects.

5.6 Performance Security

This restoration project will be sponsored and permitted by the City of Bellevue. The City will implement a suitable mechanism to ensure that the project is implemented successfully and monitored for a minimum of 5 years, or until project restoration is deemed a success by achieving its performance standards.

6. REFERENCES

Alt, David D., and Donald W. Hyndman. 1984. Roadside Geology of Washington. Mountain Press. Missoula, Montana.

Antieau, Clayton J. 1998. Biology and management of reed canarygrass, and implications for ecological restoration. Washington State Department of Transportation, Seattle, Washington. Available at: www.ser.org/sernw/pdf/RCG_BIO_MGT.pdf.

Brinson, M.M., F.R. Hauer, L.C. Lee, W.L. Nutter, R.D. Rheinhardt, R.D. Smith, and D. Whigham. 1995. A Guidebook for Application of Hydrogeomorphic Assessments to Riverine Wetlands. Technical Report WRP-DE-11, U.S. Army Engineer Waterways Experiment Station, Vicksburg, Mississippi. NTIS No. AD A308 365.

City of Bellevue. 2009. Fish use of stream drainage basins in the city of Bellevue. Available at: http://www.bellevuewa.gov/pdf/Utilities/FishUse_WestTrib.pdf.

Corps (U.S. Army Corps of Engineers). 2010. Regional Supplement to the Corps of Engineers Wetland Delineation Manual: Western Mountains, Valleys, and Coast Region. U.S. Army Corps of Engineers Engineer Research and Development Center, Vicksburg, Mississippi.

Cowardin, L.M., V. Carter, F.C. Golet, and E.T. LaRoe. 1979. Classification of Wetlands and Deepwater Habitats of the United States. Government Printing Office. Washington, D.C.

DNR (Washington State Department of Natural Resources). 2011. Natural Heritage Program GIS Layer. Available at: http://www1.dnr.wa.gov/nhp/refdesk/gis/wnhpgis.html.

Environmental Laboratory. 1987. Corps of Engineers Wetland Delineation Manual. Technical Report Y-87-1, Environmental Laboratory, Department of the Army, Waterways Experiment Station, Vicksburg, Mississippi.

Franklin, J.F., and C.T. Dyrness. 1988. Natural Vegetation of Oregon and Washington. Oregon State University Press. Corvallis, Oregon.

Greytag Macbeth. 2000. Munsell soil color charts. New Windsor, New York.

Hitchcock, C.L., and A. Cronquist. 1973. Flora of the Pacific Northwest. University of Washington Press. Seattle, Washington.

Hruby, T. 2004. Washington State Wetlands Rating System for Western Washington – Revised. Washington State Department of Ecology, Publication No. 04-06-025. Olympia, Washington.

Hruby, T. 2014. Washington State Wetland Rating System for Western Washington: 2014 Update. Washington Department of Ecology, Publication No. 14-06-029. Olympia, Washington.

NRCS (Natural Resources Conservation Service). 2010. The PLANTS Database. Available at: http://plants.usda.gov. National Plant Data Center, Baton Rouge, Louisiana.

NRCS. 2011. Web soil survey online interactive mapper. Available at: <http://websoilsurvey.nrcs.usda.gov/app/WebSoilSurvey.aspx>. Accessed July 2011.

Parametrix. 2012. Critical Areas Report, West Tributary Detention Pond DMP 165 Enhancement Project. Prepared for the City of Bellevue, Bellevue, Washington. December 2012.

Parsons Brinckerhoff. 2011. NE 4th Street/120th Avenue NE Corridor Project—Fisheries, Wildlife, and Vegetation Technical Report. Seattle, Washington.

Reed, P.B., Jr. 1993. National List of Plant Species that Occur in Wetlands, Northwest Region 9 Supplement. U.S. Department of the Interior, Fish and Wildlife Service. Washington, D.C.

Reed, P.B., Jr. 1988. National List of Plant Species that Occur in Wetlands. U.S. Department of the Interior, Fish and Wildlife Service. Washington, D.C.

SAIC. 2012. Design Report, West Tributary Detention Pond DMP 165 Restoration Project, City of Bellevue, Washington.

Shannon & Wilson. 2011. Wetland and Stream Delineation Technical Report. NE 4th Street/120th Avenue NE Corridor Project, Bellevue, Washington.

Snyder, Dale E., Philip S. Gale, and Russell F. Pringle. 1973. Soil Survey of King County Area, Washington. Soil Conservation Service, United States Department Of Agriculture. Washington, D.C.

The Watershed Company. 2009. Bellevue Urban Wildlife Habitat Literature Review. Prepared for City of Bellevue Planning and Community Development, Bellevue, Washington. May 21, 2009.

The Watershed Company. 2010. Guidance: Bellevue Urban Wildlife Habitat Functional Assessment Model. Prepared for City of Bellevue Development Services Department, Bellevue, Washington. May 21, 2009.

USFWS (U.S. Fish and Wildlife Service). 2011. National Wetlands Inventory (NWI) online interactive mapper. Available at: http://www.fws.gov/wetlands/.

WDFW (Washington Department of Fish and Wildlife). 2015. Priority Habitats and Species Report. Available at: http://wdfw.wa.gov/mapping/phs/.

WDFW (Washington Department of Fish and Wildlife). 2011. SalmonScape database. Available at: http://wdfw.wa.gov/mapping/salmonscape/.

WSDOT (Washington State Department of Transportation). 2008. Reed Canarygrass Guidance. March 17, 2008.

Williams, W.R., R.M. Laramie, and J.J. Ames. 1975. A Catalog of Washington Streams and Salmon Utilization. Volume 1, Puget Sound Region. Washington Department of Fisheries, Olympia, Washington.

Attachment A

Background Information

West Tributary Basin

Lake Washington Watershed (WRIA 8)
State Stream #08-0264

LAND CHARACTERISTICS

Basin Area: 1,006 Total Acres (5% of the City)
Drainage Jurisdiction(s):
1,005.8 Acres - in Bellevue

Highest Elevation: 496 Ft
Lowest Elevation: 26 Ft

Total Length of Open Channel: 15,430 Ft
Total Length of Storm Drainage Pipes: 86,842 Ft
Built Rain Storage Volume per Acre of Impervious Surface:
1.2 Inches

SALMON PRESENT in BASIN

Chinook*+
Sockeye
Migratory & resident cutthroat trout
Coho+

* Listed Federal Endangered Species
\+ City Species of Local Importance (Bellevue Land Use Code 20.25H.150A)

POPULATION

City Basin Population (2000): 3,329 (3.0% of the City)
Basin Population Density: 2,118 People/Square Mile
Number 7 of 26 Basins (One is the lowest density)

LAND USE (within Bellevue city limits)

Public Right of Way:	16.18%	162.73 Acres
Commercial/Office:	9.03%	90.9 Acres
Industrial:	15.09%	151.8 Acres
Institutional/Government:	4.62%	46.5 Acres
Mixed Use/Misc:	4.54%	45.7 Acres
Multi-Family Residential:	4.84%	48.7 Acres
Open Space/Park:	12.46%	125.3 Acres
Single Family Residential:	29.34%	295.1 Acres

LAND COVER

Impervious:	46%
Tree Canopy:	34%
Impervious in 100 Ft Stream Buffer:	28%
Tree Canopy in 100 Ft Stream Buffer:	49%

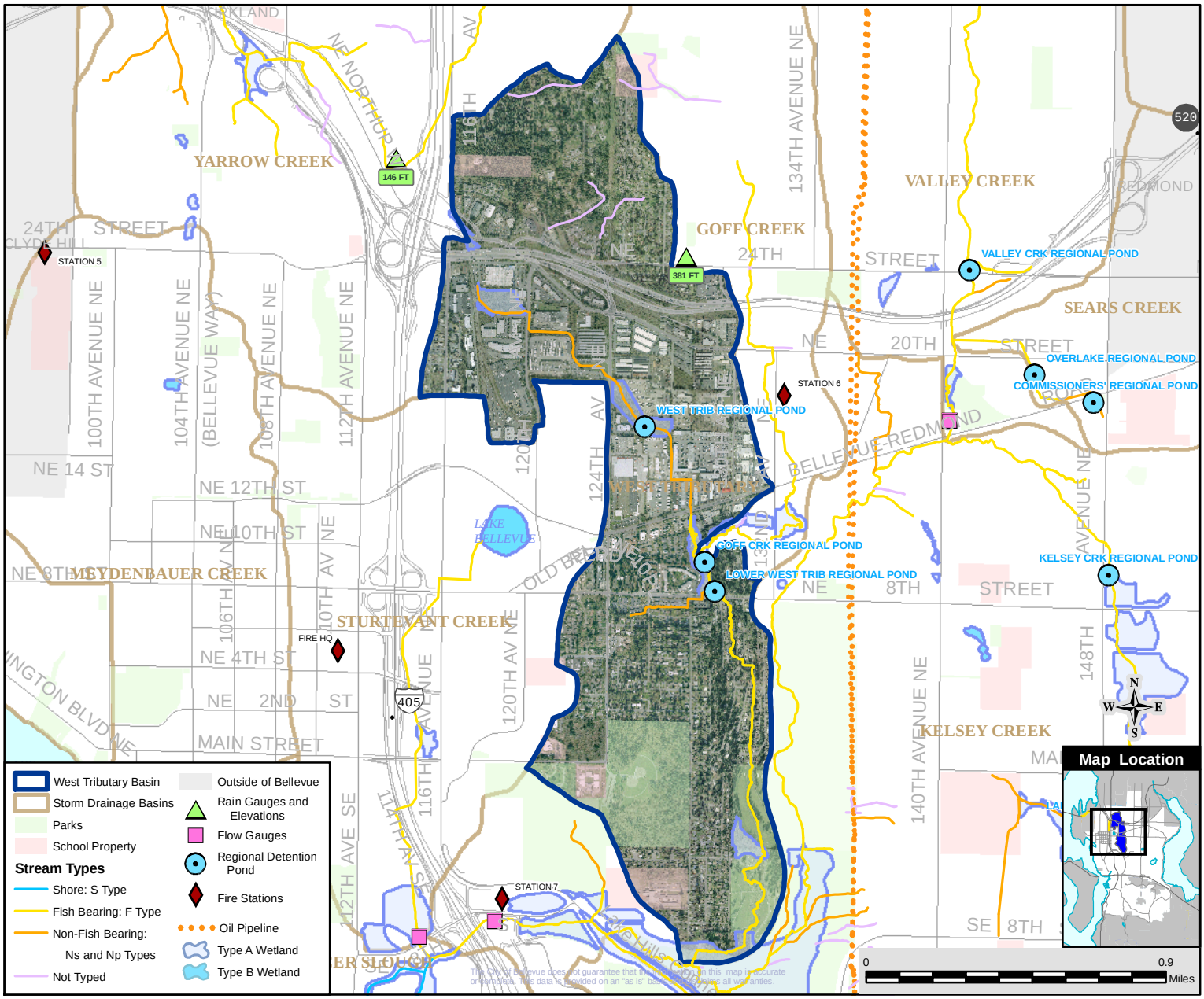

V:\utpl\ArcGIS\Storm\BasinFactSheets2010\MapBkPLTS\StormBasinFactSht21Jul2010_LegSW.mxd

Plot Date: 7/27/2010

U.S. Fish and Wildlife Service

National Wetlands Inventory

Belleuve Reg Pond

Nov 21, 2011

Wetlands

- Freshwater Emergent
- Freshwater Forested/Shrub
- Estuarine and Marine Deepwater
- Estuarine and Marine
- Freshwater Pond
- Lake
- Riverine
- Other

This map is for general reference only. The US Fish and Wildlife Service is not responsible for the accuracy or currentness of the base data shown on this map. All wetlands related data should be used in accordance with the layer metadata found on the Wetlands Mapper web site.

User Remarks:

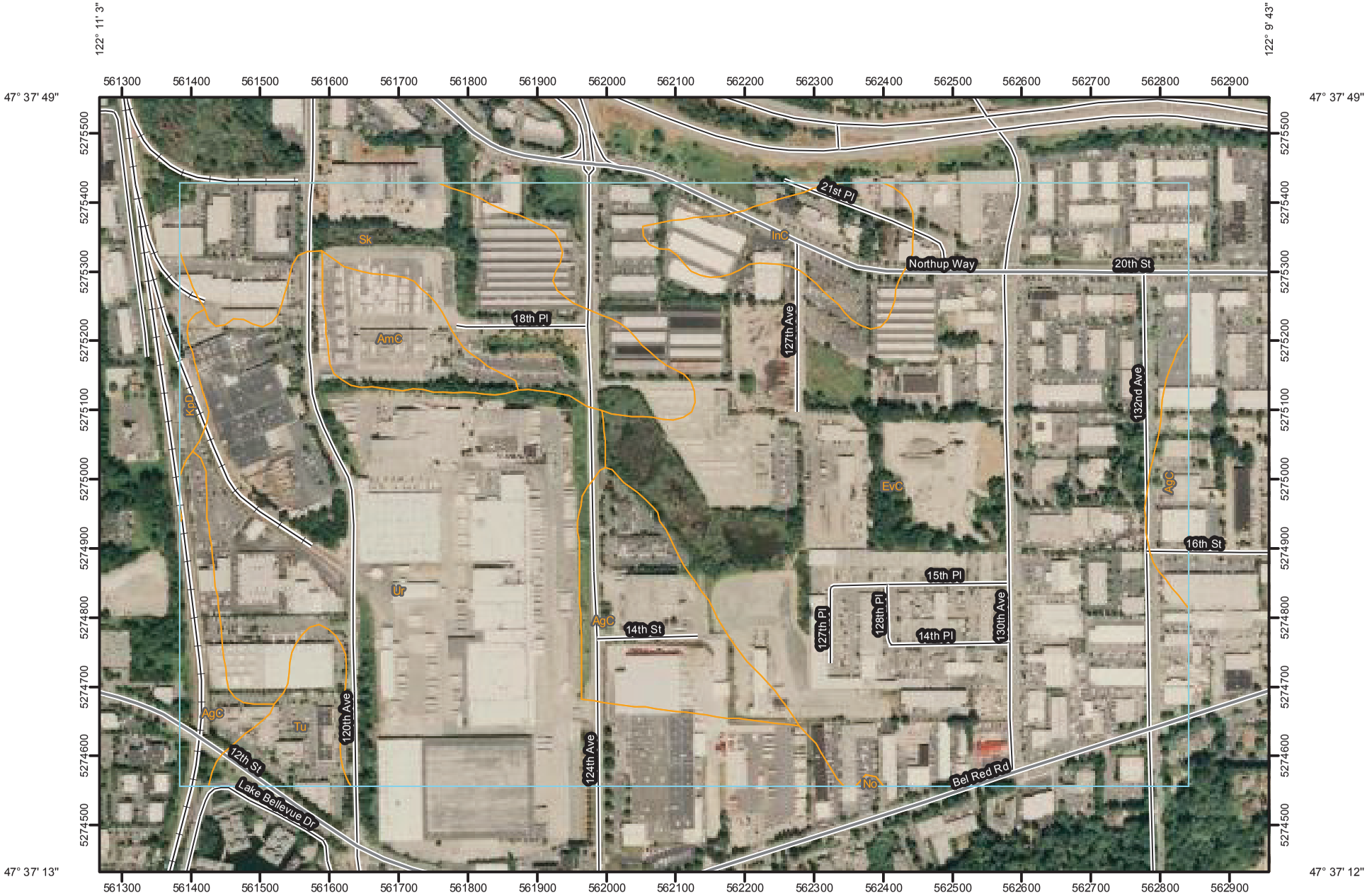
122° 11' 3"
122° 9' 43"
47° 37' 49"
47° 37' 13"
561300
561400
561500
561600
561700
561800
561900
562000
562100
562200
562300
562400
562500
562600
562700
562800
562900
5275500
5275400
5275300
5275200
5275100
5275000
5274900
5274800
5274700
5274600
5274500
21st Pl
Northup Way
20th St
18th Pl
127th Ave
132nd Ave
16th St
15th Pl
127th Pl
128th Pl
14th Pl
130th Ave
14th St
120th Ave
124th Ave
12th St
Lake Bellevue Dr
Bel Red Rd
Sk
InC
AmC
KoD
Ur
AgC
EvC
Tu
No
122° 11' 4"
122° 9' 43"
47° 37' 12"
N
Map Scale: 1:8,010 if printed on A size (8.5" x 11") sheet.
Meters
0
100
200
400
600
Feet
0
400
800
1,600
2,400

MAP LEGEND

Area of Interest (AOI)

Area of Interest (AOI)

Soils

Soil Map Units

Special Point Features

Blowout

Borrow Pit

Clay Spot

Closed Depression

Gravel Pit

Gravelly Spot

Landfill

Lava Flow

Marsh or swamp

Mine or Quarry

Miscellaneous Water

Perennial Water

Rock Outcrop

Saline Spot

Sandy Spot

Severely Eroded Spot

Sinkhole

Slide or Slip

Sodic Spot

Spoil Area

Stony Spot

Very Stony Spot

Wet Spot

Other

Special Line Features

Gully

Short Steep Slope

Other

Political Features

Cities

Water Features

Streams and Canals

Transportation

Rails

Interstate Highways

US Routes

Major Roads

Local Roads

MAP INFORMATION

Map Scale: 1:8,010 if printed on A size (8.5" × 11") sheet.

The soil surveys that comprise your AOI were mapped at 1:24,000.

Warning: Soil Map may not be valid at this scale.

Enlargement of maps beyond the scale of mapping can cause misunderstanding of the detail of mapping and accuracy of soil line placement. The maps do not show the small areas of contrasting soils that could have been shown at a more detailed scale.

Please rely on the bar scale on each map sheet for accurate map measurements.

Source of Map: Natural Resources Conservation Service
Web Soil Survey URL: http://websoilsurvey.nrcs.usda.gov
Coordinate System: UTM Zone 10N NAD83

This product is generated from the USDA-NRCS certified data as of the version date(s) listed below.

Soil Survey Area: King County Area, Washington
Survey Area Data: Version 6, Sep 22, 2009

Date(s) aerial images were photographed: 7/24/2006

The orthophoto or other base map on which the soil lines were compiled and digitized probably differs from the background imagery displayed on these maps. As a result, some minor shifting of map unit boundaries may be evident.

Map Unit Legend

King County Area, Washington (WA633)			
Map Unit Symbol	**Map Unit Name**	**Acres in AOI**	**Percent of AOI**
AgC	Alderwood gravelly sandy loam, 6 to 15 percent slopes	26.3	8.4%
AmC	Arents, Alderwood material, 6 to 15 percent slopes	8.0	2.6%
EvC	Everett gravelly sandy loam, 5 to 15 percent slopes	147.8	47.0%
InC	Indianola loamy fine sand, 4 to 15 percent slopes	10.9	3.5%
KpD	Kitsap silt loam, 15 to 30 percent slopes	1.8	0.6%
No	Norma sandy loam	0.1	0.0%
Sk	Seattle muck	29.3	9.3%
Tu	Tukwila muck	6.6	2.1%
Ur	Urban land	83.6	26.6%
Totals for Area of Interest		**314.3**	**100.0%**

Attachment B

Site Photographs

Photograph 1. Wetland 1 facing northwest from flow control structure.

Photograph 2. Wetland 1 facing west.

Photograph 3. Wetland 1 facing north.

Photograph 4. Wetland 1 buffer facing northwest from beaver dam.

Photograph 5. Wetland 1 facing northwest near wetland boundary.

Photograph 6. West Tributary Kelsey Creek facing southeast.

Attachment C

Wetland Determination Data Forms

WETLAND DETERMINATION DATA FORM – Western Mountains, Valleys, and Coast Region

Project Site: Bellevue Regional Pond City/County: /Bellevue Sampling Date: 8/2/2011
Applicant/Owner: City of Bellevue State: WA Sampling Point: W1-SP1
Investigator(s): M. Maynard, C. Worsley Section, Township, Range: S28, T25N, R5E
Landform (hillslope, terrace, etc.): Floodplain Local relief (concave, convex, none): none Slope (%): 1
Subregion (LRR): A Lat: 47 37 29.90190 Long: 122 10 25.24783 Datum: NAD 83
Soil Map Unit Name: Everett gravelly sandy loam, 5 to 15 percent slopes NWI classification: PEM
Are climatic / hydrologic conditions on the site typical for this time of year? Yes ☒ No ☐ (If no, explain in Remarks.)
Are Vegetation ☐, Soil ☐, or Hydrology ☐, significantly disturbed? Are "Normal Circumstances" present? Yes ☒ No ☐
Are Vegetation ☐, Soil ☐, or Hydrology ☐, naturally problematic? (If needed, explain any answers in Remarks.)

SUMMARY OF FINDINGS – Attach site map showing sampling point locations, transects, important features, etc.

Hydrophytic Vegetation Present?	Yes ☒	No ☐	**Is the Sampled Area within a Wetland?**	**Yes** ☒	**No** ☐
Hydric Soil Present?	Yes ☒	No ☐			
Wetland Hydrology Present?	Yes ☒	No ☐			

Remarks: Sample Plot W1-SP1 is located approximately 20 feet North northwest of Wetland Flag W1-22.

VEGETATION – Use scientific names of plants

Tree Stratum (Plot size: _____)	Absolute % Cover	Dominant Species?	Indicator Status
1. _____	_____	_____	_____
2. _____	_____	_____	_____
3. _____	_____	_____	_____
4. _____	_____	_____	_____
50% = _____, 20% = _____	_____	= Total Cover	
Sapling/Shrub Stratum (Plot size: _____)			
1. _____	_____	_____	_____
2. _____	_____	_____	_____
3. _____	_____	_____	_____
4. _____	_____	_____	_____
5. _____	_____	_____	_____
50% = _____, 20% = _____	_____	= Total Cover	
Herb Stratum (Plot size: _____)			
1. *Typha latifolia*	90	yes	OBL
2. *Oenanthe sarmentosa*	20	yes	OBL
3. *Veronica americana*	10	no	OBL
4. *Myosotis laxa*	2	no	OBL
5. *Gallium trifidum*	2	no	FACW
6. *Callitriche heterophylla*	15	no	OBL
7. *Brassica sp.*	5	no	NI
8. *Sagittaria latifolia*	2	no	OBL
9. _____	_____	_____	_____
10. _____	_____	_____	_____
11. _____	_____	_____	_____
50% = _____, 20% = _____	_____	= Total Cover	
Woody Vine Stratum (Plot size: _____)			
1. _____	_____	_____	_____
2. _____	_____	_____	_____
50% = _____, 20% = _____	_____	= Total Cover	

% Bare Ground in Herb Stratum _____

Dominance Test Worksheet:

Number of Dominant Species That Are OBL, FACW, or FAC:	2	(A)
Total Number of Dominant Species Across All Strata:	2	(B)
Percent of Dominant Species That Are OBL, FACW, or FAC:	100	(A/B)

Prevalence Index worksheet:

Total % Cover of:		Multiply by:	
OBL species	_____	x1 =	_____
FACW species	_____	x2 =	_____
FAC species	_____	x3 =	_____
FACU species	_____	x4 =	_____
UPL species	_____	x5 =	_____
Column Totals:	_____ (A)		_____ (B)

Prevalence Index = B/A = _____

Hydrophytic Vegetation Indicators:

- ☐ 1 – Rapid Test for Hydrophytic Vegetation
- ☐ 2 - Dominance Test is >50%
- ☐ 3 - Prevalence Index is ≤3.0[1]
- ☐ 4 - Morphological Adaptations[1] (Provide supporting data in Remarks or on a separate sheet)
- ☐ 5 - Wetland Non-Vascular Plants[1]
- ☐ Problematic Hydrophytic Vegetation[1] (Explain)

[1]Indicators of hydric soil and wetland hydrology must be present, unless disturbed or problematic.

Hydrophytic Vegetation Present? **Yes** ☒ **No** ☐

Remarks: *excluded from calculations per chapter 2 guidance

Project Site: _____

SOIL

Sampling Point: _____

Profile Description: (Describe to the depth needed to document the indicator or confirm the absence of indicators.)

Depth	Matrix		Redox Features					
(inches)	Color (moist)	%	Color (moist)	%	Type[1]	Loc[2]	Texture	Remarks
0-12	10YR 2/1	100					Silty muck	
12-19	2.5Y 4/1	100					Silt loam	Soil is historically disturbed (carbon)

[1]Type: C= Concentration, D=Depletion, RM=Reduced Matrix, CS=Covered or Coated Sand Grains. [2]Location: PL=Pore Lining, M=Matrix

Hydric Soil Indicators: (Applicable to all LRRs, unless otherwise noted.)

- ☐ Histosol (A1)
- ☐ Histic Epipedon (A2)
- ☐ Black Histic (A3)
- ☐ Hydrogen Sulfide (A4)
- ☐ Depleted Below Dark Surface (A11)
- ☐ Thick Dark Surface (A12)
- ☐ Sandy Mucky Mineral (S1)
- ☐ Sandy Gleyed Matrix (S4)
- ☐ Sandy Redox (S5)
- ☐ Stripped Matrix (S6)
- ☐ Loamy Mucky Mineral (F1) **(except MLRA 1)**
- ☐ Loamy Gleyed Matrix (F2)
- ☐ Depleted Matrix (F3)
- ☐ Redox Dark Surface (F6)
- ☐ Depleted Dark Surface (F7)
- ☐ Redox Depressions (F8)

Indicators for Problematic Hydric Soils[3]:

- ☐ 2 cm Muck (A10)
- ☐ Red Parent Material (TF2)
- ☐ Very Shallow Dark Surface (TF12)
- ☐ Other (Explain in Remarks)

[3]Indicators of hydrophytic vegetation and wetland hydrology must be present, unless disturbed or problematic.

Restrictive Layer (if present):

Type: _____

Depth (inches): _____

Hydric Soils Present? **Yes** ☒ **No** ☐

Remarks:

HYDROLOGY

Wetland Hydrology Indicators:

Primary Indicators (minimum of one required; check all that apply)

- ☐ Surface Water (A1)
- ☒ High Water Table (A2)
- ☒ Saturation (A3)
- ☐ Water Marks (B1)
- ☐ Sediment Deposits (B2)
- ☐ Drift Deposits (B3)
- ☐ Algal Mat or Crust (B4)
- ☐ Iron Deposits (B5)
- ☐ Surface Soil Cracks (B6)
- ☐ Inundation Visible on Aerial Imagery (B7)
- ☐ Sparsely Vegetated Concave Surface (B8)
- ☐ Water-Stained Leaves (B9) **(except MLRA 1, 2, 4A, and 4B)**
- ☐ Salt Crust (B11)
- ☐ Aquatic Invertebrates (B13)
- ☐ Hydrogen Sulfide Odor (C1)
- ☐ Oxidized Rhizospheres along Living Roots (C3)
- ☐ Presence of Reduced Iron (C4)
- ☐ Recent Iron Reduction in Tilled Soils (C6)
- ☐ Stunted or Stresses Plants (D1) **(LRR A)**
- ☐ Other (Explain in Remarks)

Secondary Indicators (2 or more required)

- ☐ Water-Stained Leaves (B9) **(MLRA 1, 2, 4A, and 4B)**
- ☐ Drainage Patterns (B10)
- ☐ Dry-Season Water Table (C2)
- ☐ Saturation Visible on Aerial Imagery (C9)
- ☐ Geomorphic Position (D2)
- ☐ Shallow Aquitard (D3)
- ☐ FAC-Neutral Test (D5)
- ☐ Raised Ant Mounds (D6) **(LRR A)**
- ☐ Frost-Heave Hummocks (D7)

Field Observations:

Surface Water Present?	Yes	☐	No	☒	Depth (inches):	_____
Water Table Present?	Yes	☒	No	☐	Depth (inches):	3
Saturation Present? (includes capillary fringe)	Yes	☒	No	☐	Depth (inches):	Surface

Wetland Hydrology Present? **Yes** ☒ **No** ☐

Describe Recorded Data (stream gauge, monitoring well, aerial photos, previous inspections), if available:

Remarks:

WETLAND DETERMINATION DATA FORM – Western Mountains, Valleys, and Coast Region

Project Site: Bellevue Regional Pond City/County: /Bellevue Sampling Date: 8/2/2011
Applicant/Owner: City of Bellevue State: WA Sampling Point: W1-SP2
Investigator(s): M. Maynard, C. Worsley Section, Township, Range: S28, T25N, R5E
Landform (hillslope, terrace, etc.): Hillslope Local relief (concave, convex, none): none Slope (%): 5
Subregion (LRR): A Lat: 47 37 29.83297 Long: 122 10 25.67617 Datum: NAD 83
Soil Map Unit Name: Everett gravelly sandy loam, 5 to 15 percent slopes NWI classification: Upland shrub
Are climatic / hydrologic conditions on the site typical for this time of year? Yes ☒ No ☐ (If no, explain in Remarks.)
Are Vegetation ☐, Soil ☐, or Hydrology ☐, significantly disturbed? Are "Normal Circumstances" present? Yes ☒ No ☐
Are Vegetation ☐, Soil ☐, or Hydrology ☐, naturally problematic? (If needed, explain any answers in Remarks.)

SUMMARY OF FINDINGS – Attach site map showing sampling point locations, transects, important features, etc.

Hydrophytic Vegetation Present?	Yes ☒	No ☐	**Is the Sampled Area within a Wetland?**	**Yes ☐ No ☒**
Hydric Soil Present?	Yes ☐	No ☒		
Wetland Hydrology Present?	Yes ☐	No ☒		

Remarks: Sample Plot W1-SP2 is located approximately 20 feet northwest of Wetland Flag W1-22.

VEGETATION – Use scientific names of plants

Tree Stratum (Plot size: _____)	Absolute % Cover	Dominant Species?	Indicator Status
1. *Alnus rubra*	60	yes	FAC
2. *Populus balsamifera*	40	yes	FAC
3. _____	_____	_____	_____
4. _____	_____	_____	_____
50% = _____, 20% = _____	_____	= Total Cover	
Sapling/Shrub Stratum (Plot size: _____)			
1. *Cornus sericea*	7	no	FACW
2. *Oemleria cerasiformis*	2	no	FACU
3. _____	_____	_____	_____
4. _____	_____	_____	_____
5. _____	_____	_____	_____
50% = _____, 20% = _____	_____	= Total Cover	
Herb Stratum (Plot size: _____)			
1. _____	_____	_____	_____
2. _____	_____	_____	_____
3. _____	_____	_____	_____
4. _____	_____	_____	_____
5. _____	_____	_____	_____
6. _____	_____	_____	_____
7. _____	_____	_____	_____
8. _____	_____	_____	_____
9. _____	_____	_____	_____
10. _____	_____	_____	_____
11. _____	_____	_____	_____
50% = _____, 20% = _____	_____	= Total Cover	
Woody Vine Stratum (Plot size: _____)			
1. *Rubus armeniacus*	90	yes	FACU
2. _____	_____	_____	_____
50% = _____, 20% = _____	_____	= Total Cover	
% Bare Ground in Herb Stratum _____			

Dominance Test Worksheet:

Number of Dominant Species That Are OBL, FACW, or FAC:	2	(A)
Total Number of Dominant Species Across All Strata:	3	(B)
Percent of Dominant Species That Are OBL, FACW, or FAC:	66	(A/B)

Prevalence Index worksheet:

Total % Cover of:		Multiply by:	
OBL species	_____	x1 =	_____
FACW species	_____	x2 =	_____
FAC species	_____	x3 =	_____
FACU species	_____	x4 =	_____
UPL species	_____	x5 =	_____
Column Totals:	_____ (A)		_____ (B)

Prevalence Index = B/A = _____

Hydrophytic Vegetation Indicators:

- ☐ 1 – Rapid Test for Hydrophytic Vegetation
- ☐ 2 - Dominance Test is >50%
- ☐ 3 - Prevalence Index is ≤ 3.0[1]
- ☐ 4 - Morphological Adaptations[1] (Provide supporting data in Remarks or on a separate sheet)
- ☐ 5 - Wetland Non-Vascular Plants[1]
- ☐ Problematic Hydrophytic Vegetation[1] (Explain)

[1]Indicators of hydric soil and wetland hydrology must be present, unless disturbed or problematic.

Hydrophytic Vegetation Present? **Yes ☒ No ☐**

Remarks:

Project Site: _____

SOIL

Sampling Point: _____

Profile Description: (Describe to the depth needed to document the indicator or confirm the absence of indicators.)

Depth	Matrix		Redox Features					
(inches)	Color (moist)	%	Color (moist)	%	Type[1]	Loc[2]	Texture	Remarks
0-18	2.5Y 3/2	100					Silt loam	

[1]Type: C= Concentration, D=Depletion, RM=Reduced Matrix, CS=Covered or Coated Sand Grains. [2]Location: PL=Pore Lining, M=Matrix

Hydric Soil Indicators: (Applicable to all LRRs, unless otherwise noted.)

- ☐ Histosol (A1)
- ☐ Histic Epipedon (A2)
- ☐ Black Histic (A3)
- ☐ Hydrogen Sulfide (A4)
- ☐ Depleted Below Dark Surface (A11)
- ☐ Thick Dark Surface (A12)
- ☐ Sandy Mucky Mineral (S1)
- ☐ Sandy Gleyed Matrix (S4)
- ☐ Sandy Redox (S5)
- ☐ Stripped Matrix (S6)
- ☐ Loamy Mucky Mineral (F1) **(except MLRA 1)**
- ☐ Loamy Gleyed Matrix (F2)
- ☐ Depleted Matrix (F3)
- ☐ Redox Dark Surface (F6)
- ☐ Depleted Dark Surface (F7)
- ☐ Redox Depressions (F8)

Indicators for Problematic Hydric Soils[3]:

- ☐ 2 cm Muck (A10)
- ☐ Red Parent Material (TF2)
- ☐ Very Shallow Dark Surface (TF12)
- ☐ Other (Explain in Remarks)

[3]Indicators of hydrophytic vegetation and wetland hydrology must be present, unless disturbed or problematic.

Restrictive Layer (if present):

Type: _____

Depth (inches): _____

Hydric Soils Present? **Yes** ☐ **No** ☒

Remarks:

HYDROLOGY

Wetland Hydrology Indicators:

Primary Indicators (minimum of one required; check all that apply)

- ☐ Surface Water (A1)
- ☐ High Water Table (A2)
- ☐ Saturation (A3)
- ☐ Water Marks (B1)
- ☐ Sediment Deposits (B2)
- ☐ Drift Deposits (B3)
- ☐ Algal Mat or Crust (B4)
- ☐ Iron Deposits (B5)
- ☐ Surface Soil Cracks (B6)
- ☐ Inundation Visible on Aerial Imagery (B7)
- ☐ Sparsely Vegetated Concave Surface (B8)
- ☐ Water-Stained Leaves (B9) **(except MLRA 1, 2, 4A, and 4B)**
- ☐ Salt Crust (B11)
- ☐ Aquatic Invertebrates (B13)
- ☐ Hydrogen Sulfide Odor (C1)
- ☐ Oxidized Rhizospheres along Living Roots (C3)
- ☐ Presence of Reduced Iron (C4)
- ☐ Recent Iron Reduction in Tilled Soils (C6)
- ☐ Stunted or Stresses Plants (D1) **(LRR A)**
- ☐ Other (Explain in Remarks)

Secondary Indicators (2 or more required)

- ☐ Water-Stained Leaves (B9) **(MLRA 1, 2, 4A, and 4B)**
- ☐ Drainage Patterns (B10)
- ☐ Dry-Season Water Table (C2)
- ☐ Saturation Visible on Aerial Imagery (C9)
- ☐ Geomorphic Position (D2)
- ☐ Shallow Aquitard (D3)
- ☐ FAC-Neutral Test (D5)
- ☐ Raised Ant Mounds (D6) **(LRR A)**
- ☐ Frost-Heave Hummocks (D7)

Field Observations:

Surface Water Present?	Yes	☐	No	☒	Depth (inches): _____
Water Table Present?	Yes	☐	No	☒	Depth (inches): _____
Saturation Present? (includes capillary fringe)	Yes	☐	No	☒	Depth (inches): _____

Wetland Hydrology Present? **Yes** ☐ **No** ☒

Describe Recorded Data (stream gauge, monitoring well, aerial photos, previous inspections), if available:

Remarks: No indicators of hydrology were observed during the site investigation.

WETLAND DETERMINATION DATA FORM – Western Mountains, Valleys, and Coast Region

Project Site: Bellevue Regional Pond City/County: /Bellevue Sampling Date: 8/2/2011

Applicant/Owner: City of Bellevue State: WA Sampling Point: W1-SP3

Investigator(s): M. Maynard, C. Worsley Section, Township, Range: S28, T25N, R5E

Landform (hillslope, terrace, etc.): Floodplain Local relief (concave, convex, none): none Slope (%): 1

Subregion (LRR): A Lat: 47 37 28.54624 Long: 122 10 16.73526 Datum: NAD 83

Soil Map Unit Name: Everett gravelly sandy loam, 5 to 15 percent slopes NWI classification: PFO

Are climatic / hydrologic conditions on the site typical for this time of year? Yes ☒ No ☐ (If no, explain in Remarks.)

Are Vegetation ☐, Soil ☐, or Hydrology ☐, significantly disturbed? Are "Normal Circumstances" present? Yes ☒ No ☐

Are Vegetation ☐, Soil ☐, or Hydrology ☐, naturally problematic? (If needed, explain any answers in Remarks.)

SUMMARY OF FINDINGS – Attach site map showing sampling point locations, transects, important features, etc.

Hydrophytic Vegetation Present?	Yes	☒	No	☐	**Is the Sampled Area within a Wetland?**	**Yes** ☒	**No** ☐
Hydric Soil Present?	Yes	☒	No	☐			
Wetland Hydrology Present?	Yes	☒	No	☐			

Remarks: Sample Plot W1-SP3 is located approximately 30 feet south of Wetland Flag W1-74.

VEGETATION – Use scientific names of plants

Tree Stratum (Plot size: _____)	Absolute % Cover	Dominant Species?	Indicator Status
1. *Salix lucida*	75	yes	FACW
2. _____	_____	_____	_____
3. _____	_____	_____	_____
4. _____	_____	_____	_____
50% = _____, 20% = _____	75	= Total Cover	
Sapling/Shrub Stratum (Plot size: _____)			
1. *Spirea douglasii*	5	no	FACW
2. *Cornus sericea*	2	no	FACW
3. _____	_____	_____	_____
4. _____	_____	_____	_____
5. _____	_____	_____	_____
50% = _____, 20% = _____	7	= Total Cover	
Herb Stratum (Plot size: _____)			
1. *Phalaris arundinacea*	40	yes	FACW
2. _____	_____	_____	_____
3. _____	_____	_____	_____
4. _____	_____	_____	_____
5. _____	_____	_____	_____
6. _____	_____	_____	_____
7. _____	_____	_____	_____
8. _____	_____	_____	_____
9. _____	_____	_____	_____
10. _____	_____	_____	_____
11. _____	_____	_____	_____
50% = _____, 20% = _____	40	= Total Cover	
Woody Vine Stratum (Plot size: _____)			
1. _____	_____	_____	_____
2. _____	_____	_____	_____
50% = _____, 20% = _____	_____	= Total Cover	
% Bare Ground in Herb Stratum _____			

Dominance Test Worksheet:

Number of Dominant Species That Are OBL, FACW, or FAC:	2	(A)
Total Number of Dominant Species Across All Strata:	2	(B)
Percent of Dominant Species That Are OBL, FACW, or FAC:	100	(A/B)

Prevalence Index worksheet:

Total % Cover of:		Multiply by:	
OBL species	_____	x1 =	_____
FACW species	_____	x2 =	_____
FAC species	_____	x3 =	_____
FACU species	_____	x4 =	_____
UPL species	_____	x5 =	_____
Column Totals:	_____ (A)		_____ (B)

Prevalence Index = B/A = _____

Hydrophytic Vegetation Indicators:

- ☐ 1 – Rapid Test for Hydrophytic Vegetation
- ☐ 2 - Dominance Test is >50%
- ☐ 3 - Prevalence Index is ≤3.0[1]
- ☐ 4 - Morphological Adaptations[1] (Provide supporting data in Remarks or on a separate sheet)
- ☐ 5 - Wetland Non-Vascular Plants[1]
- ☐ Problematic Hydrophytic Vegetation[1] (Explain)

[1]Indicators of hydric soil and wetland hydrology must be present, unless disturbed or problematic.

Hydrophytic Vegetation Present? **Yes** ☒ **No** ☐

Remarks: *excluded from calculations per chapter 2 guidance

Project Site: _____

SOIL

Sampling Point: _____

Profile Description: (Describe to the depth needed to document the indicator or confirm the absence of indicators.)

Depth	Matrix		Redox Features					
(inches)	Color (moist)	%	Color (moist)	%	Type[1]	Loc[2]	Texture	Remarks
0-5	10YR 3/1	100					Loam	Many roots in layer
5-9	2.5Y 4/1	100					Sandy loam	
9-18	5Y 5/1	90	7.5YR 3/4	10	c	M	Gr Sa Loam	Cobbles and carbon in layer

[1]Type: C= Concentration, D=Depletion, RM=Reduced Matrix, CS=Covered or Coated Sand Grains. [2]Location: PL=Pore Lining, M=Matrix

Hydric Soil Indicators: (Applicable to all LRRs, unless otherwise noted.)

- ☐ Histosol (A1)
- ☐ Histic Epipedon (A2)
- ☐ Black Histic (A3)
- ☐ Hydrogen Sulfide (A4)
- ☐ Depleted Below Dark Surface (A11)
- ☐ Thick Dark Surface (A12)
- ☐ Sandy Mucky Mineral (S1)
- ☐ Sandy Gleyed Matrix (S4)
- ☐ Sandy Redox (S5)
- ☐ Stripped Matrix (S6)
- ☐ Loamy Mucky Mineral (F1) **(except MLRA 1)**
- ☐ Loamy Gleyed Matrix (F2)
- ☐ Depleted Matrix (F3)
- ☒ Redox Dark Surface (F6)
- ☐ Depleted Dark Surface (F7)
- ☐ Redox Depressions (F8)

Indicators for Problematic Hydric Soils[3]:

- ☐ 2 cm Muck (A10)
- ☐ Red Parent Material (TF2)
- ☐ Very Shallow Dark Surface (TF12)
- ☐ Other (Explain in Remarks)

[3]Indicators of hydrophytic vegetation and wetland hydrology must be present, unless disturbed or problematic.

Restrictive Layer (if present):

Type: _____

Depth (inches): _____

Hydric Soils Present? **Yes** ☒ **No** ☐

Remarks:

HYDROLOGY

Wetland Hydrology Indicators:

Primary Indicators (minimum of one required; check all that apply)

- ☐ Surface Water (A1)
- ☒ High Water Table (A2)
- ☒ Saturation (A3)
- ☐ Water Marks (B1)
- ☐ Sediment Deposits (B2)
- ☐ Drift Deposits (B3)
- ☐ Algal Mat or Crust (B4)
- ☐ Iron Deposits (B5)
- ☐ Surface Soil Cracks (B6)
- ☐ Inundation Visible on Aerial Imagery (B7)
- ☐ Sparsely Vegetated Concave Surface (B8)
- ☐ Water-Stained Leaves (B9) **(except MLRA 1, 2, 4A, and 4B)**
- ☐ Salt Crust (B11)
- ☐ Aquatic Invertebrates (B13)
- ☐ Hydrogen Sulfide Odor (C1)
- ☐ Oxidized Rhizospheres along Living Roots (C3)
- ☐ Presence of Reduced Iron (C4)
- ☐ Recent Iron Reduction in Tilled Soils (C6)
- ☐ Stunted or Stresses Plants (D1) **(LRR A)**
- ☐ Other (Explain in Remarks)

Secondary Indicators (2 or more required)

- ☐ Water-Stained Leaves (B9) **(MLRA 1, 2, 4A, and 4B)**
- ☐ Drainage Patterns (B10)
- ☐ Dry-Season Water Table (C2)
- ☐ Saturation Visible on Aerial Imagery (C9)
- ☐ Geomorphic Position (D2)
- ☐ Shallow Aquitard (D3)
- ☐ FAC-Neutral Test (D5)
- ☐ Raised Ant Mounds (D6) **(LRR A)**
- ☐ Frost-Heave Hummocks (D7)

Field Observations:

Surface Water Present?	Yes	☐	No	☒	Depth (inches):	_____
Water Table Present?	Yes	☒	No	☐	Depth (inches):	15
Saturation Present? (includes capillary fringe)	Yes	☒	No	☐	Depth (inches):	Surface

Wetland Hydrology Present? **Yes** ☒ **No** ☐

Describe Recorded Data (stream gauge, monitoring well, aerial photos, previous inspections), if available:

Remarks:

Attachment D

Wetland Rating Forms

Wetland name or number W1

WETLAND RATING FORM – WESTERN WASHINGTON

Version 2 – Updated July 2006 to increase accuracy and reproducibility among users
Updated Oct. 2008 with the new WDFW definitions for priority habitats

Name of wetland (if known): W1 Date of site visit: 8/2/2011

Rated by: M. Maynard/J. Meyer Trained by Ecology? Yes X No_____ Date of training: 04/2006/2014

SEC: 28 TWNSHP: 25N RNGE: 5E Is S/T/R in Appendix D? Yes_____ No X

Map of wetland unit: Figure_____ Estimated size 5.8 acres

SUMMARY OF RATING

Category based on FUNCTIONS provided by wetland: I_____ II X III_____ IV_____

Category I =	Score > 70	Score for Water Quality Functions	18
Category II =	Score 51 - 69	Score for Hydrologic Functions	24
Category III =	Score 30 – 50	Score for Habitat Functions	18
Category IV =	Score < 30	TOTAL Score for Functions	60

Category based on SPECIAL CHARACTERISTCS of Wetland I_____ II_____ Does not apply X

Final Category (choose the "highest" category from above") II

Summary of basic information about the wetland unit.

Wetland Unit has Special Characteristics		Wetland HGM Class used for Rating	
Estuarine		**Depressional**	X
Natural Heritage Wetland		**Riverine**	
Bog		**Lake-fringe**	
Mature Forest		**Slope**	
Old Growth Forest		**Flats**	
Coastal Lagoon		**Freshwater Tidal**	
Interdunal			
None of the above		Check if unit has multiple HGM classes present	

Does the wetland being rated meet any of the criteria below? If you answer YES to any of the questions below you will need to protect the wetland according to the regulations regarding the special characteristics found in the wetland.

Check List for Wetlands that Need Additional Protection (in addition to the protection recommended for its category)	YES	NO
SP1. *Has the wetland unit been documented as a habitat for any Federally listed Threatened or Endangered **animal or plant** species (T/E species)?* For the purposes of this rating system, "documented" means the wetland is on the appropriate state or federal database.		X
SP2. *Has the wetland unit been documented as habitat for any State listed Threatened or Endangered **animal** species?* For the purposes of this rating system, "documented" means the wetland is on the appropriate state database. Note: Wetlands with State listed plant species are categorized as Category 1 Natural Heritage Wetlands (see p. 19 of data form).		X
SP3. *Does the wetland unit contain individuals of Priority species listed by the WDFW for the state?*		X
SP4. *Does the wetland unit have a local significance in addition to its functions?* For example, the wetland has been identified in the Shoreline Master Program, the Critical Areas Ordinance, or in a local management plan as having special significance.		X

To complete the next part of the data sheet you will need to determine the Hydrogeomorphic Class of the wetland being rated.

The hydrogeomorphic classification groups wetlands in to those that function in similar ways. This simplifies the questions needed to answer how well the wetland functions. The Hydrogeomorphic Class of a wetland can be determined using the key below. See p. 24 for more detailed instructions on classifying wetlands.

Wetland name or number W1_____

Classification of Vegetated Wetlands for Western Washington

If the hydrologic criteria listed in each question do not apply to the entire unit being rated, you probably have a unit with multiple HGM classes. In this case, identify which hydrologic criteria in questions 1-7 apply, and go to Question 8.

1. Are the water levels in the entire unit usually controlled by tides (i.e. except during floods)?
   NO – go to 2 **YES** – the wetland class is **Tidal Fringe**
   If yes, is the salinity of the water during periods of annual low flow below 0.5 ppt (parts per thousand)?
   YES – Freshwater Tidal Fringe **NO – Saltwater Tidal Fringe (Estuarine)**
   *If your wetland can be classified as a Freshwater Tidal Fringe use the forms for **Riverine** wetlands. If it is a Saltwater Tidal Fringe it is rated as an **Estuarine** wetland.* Wetlands that were call estuarine in the first and second editions of the rating system are called Salt Water Tidal Fringe in the Hydrogeomorphic Classification. Estuarine wetlands were categorized separately in the earlier editions, and this separation is being kept in this revision. To maintain consistency between editions, the term "Estuarine" wetland is kept. Please note, however, that the characteristics that define Category I and II estuarine wetlands have changed (see p. _____).

2. The entire wetland unit is flat and precipitation is only source (>90%) of water to it. Groundwater and surface water runoff are NOT sources of water to the unit.
   NO – go to 3 **YES** – The wetland class is **Flats**
   If your wetland can be classified as a "Flats" wetland, use the form for **Depressional** wetlands.

3. Does the entire wetland meet both of the following criteria?
   _____ The vegetated part of the wetland is on the shores of a body of permanent open water (without any vegetation on the surface) where at least 20 acres (8ha) in size;
   _____ At least 30% of the open water area is deeper than 6.6 (2 m)?
   NO – go to 4 **YES** – The wetland class is **Lake-fringe (Lacustrine Fringe)**

4. Does the entire wetland meet all of the following criteria?
   _____ The wetland is on a slope *(slope can be very gradual)*.
   _____ The water flows through the wetland in one direction (unidirectional) and usually comes from seeps. It may flow subsurface, as sheetflow, or in a swale without distinct banks.
   _____ The water leaves the wetland **without being impounded**?
   NOTE: *Surface water does not pond in these types of wetlands except occasionally in very small and shallow depressions or behind hummocks (depressions are usually <3 ft diameter and less than 1 foot deep).*
   NO – go to 5 **YES** – The wetland class is **Slope**

5. Does the entire wetland meet all of the following criteria?
   _____ The unit is in a valley or stream channel where it gets inundated by overbank flooding from that stream or river.
   _____ The overbank flooding occurs at least once every two years.
   NOTE: *The riverine unit can contain depressions that are filled with water when the river is not flooding..*
   NO – go to 6 **YES** – The wetland class is **Riverine**

6. Is the entire wetland unit in a topographic depression in which water ponds, or is saturated to the surface, at some time of the year. This means that any outlet, if present is higher than the interior of the wetland.
   NO – go to 7 **YES** – The wetland class is **Depressional**

7. Is the entire wetland located in a very flat area with no obvious depression and no overbank flooding. The unit does not pond surface water more than a few inches. The unit seems to be maintained by high groundwater in the area. The wetland may be ditched, but has no obvious natural outlet.
   No – go to 8 YES – The wetland class is Depressional

8. Your wetland unit seems to be difficult to classify and probably contains several different HGM classes. For example, seeps at the base of a slope may grade into a riverine floodplain, or a small stream within a depressional wetland has a zone of flooding along its sides. GO BACK AND IDENTIFY WHICH OF THE HYDROLOGIC REGIMES DESCRIBED IN QUESTIONS 1-7 APPLY TO DIFFERENT AREAS IN THE UNIT (make a rough sketch to help you decide). Use the following table to identify the appropriate class to use for the rating system if you have several HGM classes present within your wetland. NOTE: Use this table only if the class that is recommended in the second column represents 10% or more of the total area of the wetland unit being rated. If the area of the class listed in column 2 is less than 10% of the unit, classify the wetland using the class that represents more than 90% of the total area.

HGM Classes within the wetland unit being rated	*HGM Class to Use in Rating*
Slope + Riverine	Riverine
Slope + Depressional	Depressional
Slope + Lake-fringe	Lake-fringe
Depressional + Riverine along stream within boundary	Depressional
Depressional + Lake-fringe	Depressional
Salt Water Tidal Fringe and any other class of freshwater wetland	Treat as ESTUARINE under wetlands with special characteristics

If you are unable still to determine which of the above criteria apply to your wetland, or you have more than 2 HGM classes within a wetland boundary, classify the wetland as **Depressional** for the rating.

Wetland name or number W1_____

D	Depressional and Flat Wetlands	Points (only 1 score per box)
	WATER QUALITY FUNCTIONS – Indicators that wetland functions to improve water quality.	
D 1	**Does the wetland have the <u>potential</u> to improve water quality?**	*(see p.38)*
	D 1.1 Characteristics of surface water flows out of the wetland: • Unit is a depression with no surface water leaving it (no outlet)..... points = 3 • Unit has an intermittently flowing, OR highly constricted, permanently flowing outlet ..... points = 2 • Unit has an unconstricted, or slightly constricted, surface outlet (*permanently flowing*) ..... points = 1 • Unit is a "flat" depression (Q.7 on key), or in the Flats class, with permanent surface outflow **and no obvious natural outlet** and/or outlet is a man-made ditch..... points = 1 *(If ditch is not permanently flowing treat unit as "intermittently flowing")* **Provide photo or drawing**	**Figure ___** 2
	D 1.2 The soil 2 inches below the surface (or duff layer) is clay or organic (*use NRCS definitions*) YES points = 4 NO points = 0	0
	D 1.3 Characteristics of persistent vegetation (emergent, shrub, and/or forest Cowardin class): • Wetland has persistent, ungrazed vegetation > = 95% of area..... points = 5 • Wetland has persistent, ungrazed vegetation > = 1/2 of area..... points = 3 • Wetland has persistent, ungrazed vegetation > = 1/10 of area..... points = 1 • Wetland has persistent, ungrazed vegetation < 1/10 of area..... points = 0 **Map of Cowardin vegetation classes**	**Figure ___** 3
	D 1.4 Characteristics of seasonal ponding or inundation: *This is the area of the wetland that is ponded for at least 2 months, but dries out sometime during the year. Do not count the area that is permanently ponded. Estimate area as the average condition 5 out of 10 years.* • Area seasonally ponded is > 1/2 total area of wetland ..... points = 4 • Area seasonally ponded is > 1/4 total area of wetland ..... points = 2 • Area seasonally ponded is < 1/4 total area of wetland ..... points = 0 **Map of Hydroperiods**	**Figure ___** 4
	Total for D 1 *Add the points in the boxes above*	9
D 2	**Does the wetland have the <u>opportunity</u> to improve water quality?** Answer YES if you know or believe there are pollutants in groundwater or surface water coming into the wetland that would otherwise reduce water quality in streams, lakes or groundwater downgradient from the wetland? *Note which of the following conditions provide the sources of pollutants. A unit may have pollutants coming from several sources, but any single source would qualify as opportunity.* ____ Grazing in the wetland or within 150 ft __X__ Untreated stormwater discharges to wetland ____ Tilled fields or orchards within 150 ft. of wetland X A stream or culvert discharges into wetland that drains developed areas, residential areas, farmed fields, roads, or clear-cut logging X Residential, urban areas, golf courses are within 150 ft. of wetland ____ Wetland is fed by groundwater high in phosphorus or nitrogen ____ Other _____ YES multiplier is 2 NO multiplier is 1	*(see p. 44)* Multiplier 2
◆	**<u>TOTAL</u> – Water Quality Functions** Multiply the score from D1 by D2; then ***add score to table on p. 1***	18
	HYDROLOGIC FUNCTIONS – Indicators that wetland unit functions to reduce flooding and stream degradation.	
D 3	**Does the wetland have the <u>potential</u> to reduce flooding and erosion?**	*(see p.46)*
	D 3.1 Characteristics of surface water flows out of the wetland unit • Unit is a depression with no surface water leaving it (no outlet)..... points = 4 • Unit has an intermittently flowing, OR highly constricted permanently flowing outlet ..... points = 2 • Unit is a "flat" depression (Q.7 on key) or in the Flats class, with permanent surface outflow **and no obvious natural outlet** and/or outlet is a man-made ditch..... points = 1 *(If ditch is not permanently flowing treat unit as "intermittently flowing")* • Unit has an unconstricted, or slightly constricted, surface outlet *(permanently flowing)* ..... points = 0	2
	D 3.2 Depth of storage during wet periods. *Estimate the height of ponding above the bottom of the outlet. For units with no outlet measure from the surface of permanent water or deepest part (if dry).* • Marks of ponding are 3 ft. or more above the surface or bottom of the outlet ..... points = 7 • The wetland is a "headwater" wetland..... points = 5 • Marks of ponding between 2 ft. to < 3 ft. from surface or bottom of outlet..... points = 5 • Marks are at least 0.5 ft. to < 2 ft. from surface or bottom of outlet..... points = 3 • Wetland is flat (yes to Q.2 or Q.7 on key)but has small depressions on the surface that trap water points = 1 • Marks of ponding less than 0.5 ft..... points = 0	7
	D 3.3 Contribution of wetland unit to storage in the watershed: *Estimate the ratio of the area of upstream basin contributing surface water to the wetland to the area of the wetland unit itself.* • The area of the basin is less than 10 times the area of unit..... points = 5 • The area of the basin is 10 to 100 times the area of the unit ..... points = 3 • The area of the basin is more than 100 times the area of the unit..... points = 0 • Entire unit is in the FLATS class ..... points = 5	3
	Total for D 3 *Add the points in the boxes above*	12

D 4	**Does the wetland have the <u>opportunity</u> to reduce flooding and erosion?** Answer YES if the unit is in a location in the watershed where the flood storage, or reduction in water velocity, it provides helps protect downstream property and aquatic resources from flooding or excessive and/or erosive flows. Answer NO if the water coming into the wetland is controlled by a structure such as flood gate, tide gate, flap valve, reservoir etc. OR you estimate that more than 90% of the water in the wetland is from groundwater in areas where damaging groundwater flooding does not occur. *Note which of the following indicators of opportunity apply.* ____ Wetland is in a headwater of a river or stream that has flooding problems. __X__ Wetland drains to a river or stream that has flooding problems ____ Wetland has no outlet and impounds surface runoff water that might otherwise flow into a river or stream that has flooding problems ____ Other _____ YES multiplier is 2 NO multiplier is 1	*(see p. 49)* Multiplier 2
◆	**<u>TOTAL</u> – Hydrologic Functions** Multiply the score from D3 by D4; then ***add score to table on p. 1***	24

Comments:

Wetland name or number W1 _____

R	Riverine and Freshwater Tidal Fringe Wetlands	Points (only 1 score per box)
	WATER QUALITY FUNCTIONS – Indicators that wetland functions to improve water quality.	
R 1	**Does the wetland have the <u>potential</u> to improve water quality?** *(see p.52)*	
	R 1.1 Area of surface depressions within the riverine wetland that can trap sediments during a flooding event: • Depressions cover > 3/4 area of wetland ..... points = 8 • Depressions cover > 1/2 area of wetland ..... points = 4 **(If depressions > 1/2 of area of unit draw polygons on aerial photo or map)** • Depressions present but cover < 1/2 area of wetland. ..... points = 2 • No depressions present ..... points = 0	**Figure ___**
	R 1.2 Characteristics of the vegetation in the unit (areas with >90% cover at person height): • Trees or shrubs > 2/3 area of the unit ..... points = 8 • Trees or shrubs > 1/3 area of the wetland ..... points = 6 • Ungrazed, herbaceous plants > 2/3 area of unit ..... points = 6 • Ungrazed herbaceous plants > 1/3 area of unit ..... points = 3 • Trees, shrubs, and ungrazed herbaceous < 1/3 area of unit ..... points = 0 **Aerial photo or map showing polygons of different vegetation types**	**Figure ___**
	Add the points in the boxes above	
R 2	**Does the wetland have the <u>opportunity</u> to improve water quality?** Answer YES if you know or believe there are pollutants in groundwater or surface water coming into the wetland that would otherwise reduce water quality in streams, lakes or groundwater downgradient from the wetland. *Note which of the following conditions provide the sources of pollutants. A unit may have pollutants coming from several sources, but any single source would qualify as opportunity.* ____ Grazing in the wetland or within 150 ft ____ Untreated stormwater discharges to wetland ____ Tilled fields or orchards within 150 ft. of wetland ____ A stream or culvert discharges into wetland that drains developed areas, residential areas, farmed fields, roads, or clear-cut logging ____ Residential, urban areas, golf courses are within 150 ft. of wetland ____ The river or stream linked to the wetland has a contributing basin where human activities have raised levels of sediment, toxic compounds or nutrients in the river water above standards for water quality. ____ Other _____ YES multiplier is 2 NO multiplier is 1	*(see p. 53)* Multiplier _____
◆	**<u>TOTAL</u> – Water Quality Functions** Multiply the score from R1 by R2; then ***add score to table on p. 1***	
	HYDROLOGIC FUNCTIONS – Indicators that wetland functions to reduce flooding and stream erosion.	
R 3	**Does the wetland have the <u>potential</u> to reduce flooding and erosion?**	*(see p.54)*
	R 3.1 Characteristics of the overbank storage the wetland provides: *Estimate the average width of the wetland perpendicular to the direction of the flow and the width of the stream or river channel (distance between banks). Calculate the ratio: (average width of unit) / (average width of stream between banks).* • If the ratio is more than 20 ..... points = 9 • If the ratio is between 10 – 20 ..... points = 6 • If the ratio is 5- <10 ..... points = 4 • If the ratio is 1- <5 ..... points = 2 • If the ratio is < 1 ..... points = 1 **Aerial photo or map showing average widths**	**Figure ___**
	R 3.2 Characteristics of vegetation that slow down water velocities during floods: *Treat large woody debris as "forest or shrub". Choose the points appropriate for the best description. (polygons need to have >90% cover at person height NOT Cowardin classes):* • Forest or shrub for > 1/3 area OR herbaceous plants > 2/3 area ..... points = 7 • Forest or shrub for > 1/10 area OR herbaceous plants > 1/3 area ..... points = 4 • Vegetation does not meet above criteria ..... points = 0 **Aerial photo or map showing polygons of different vegetation types**	**Figure ___**
	Add the points in the boxes above	
R 4	**Does the wetland have the <u>opportunity</u> to reduce flooding and erosion?** Answer YES if the wetland is in a location in the watershed where the flood storage, or reduction in water velocity, it provides helps protect downstream property and aquatic resources from flooding or excessive and/or erosive flows. *Note which of the following conditions apply.* ____ There are human structures and activities downstream (roads, buildings, bridges, farms) that can be damaged by flooding. ____ There are natural resources downstream (e.g. salmon redds) that can be damaged by flooding ____ Other _____ *(Answer NO if the major source of water to the wetland is controlled by a reservoir or the wetland is tidal fringe along the sides of a dike)* YES multiplier is 2 NO multiplier is 1	*(see p.57)* Multiplier _____
◆	**<u>TOTAL</u> – Hydrologic Functions** Multiply the score from R3 by R4; then ***add score to table on p. 1***	

Comments:

Wetland name or number W1 _____

L	Lake-fringe Wetlands	Points
	WATER QUALITY FUNCTIONS – Indicators that the wetland unit functions to improve water quality.	(only 1 score per box)
L 1	**Does the wetland unit have the <u>potential</u> to improve water quality?** *(see p.59)*	
	L 1.1 Average width of vegetation along the lakeshore (use polygons of Cowardin classes): • Vegetation is more than 33 ft. (10m) wide ..... points = 6 • Vegetation is more than 16 ft.(5m) wide and < 33 ft ..... points = 3 • Vegetation is more than 6 ft. (2m) wide and < 16 ft ..... points = 1 • Vegetation is less than 6 ft. wide..... points = 0 **Map of Cowardin classes with widths marked**	**Figure ___**
	L 1.2 Characteristics of the vegetation in the wetland: *Choose the appropriate description that results in the highest points, and do not include any open water in your estimate of coverage. The herbaceous plants can be either the dominant form or as an understory in a shrub or forest community. These are not Cowardin classes. Area of Cover is total cover in the unit, but it can be in patches. NOTE: Herbaceous does not include aquatic bed.* • Cover of herbaceous plants is > 90% of the vegetated area..... points = 6 • Cover of herbaceous plants is > 2/3 of the vegetated area..... points = 4 • Cover of herbaceous plants is > 1/3 of the vegetated area..... points = 3 • Other vegetation that is not aquatic bed or herbaceous covers > 2/3 of the unit ..... points = 3 • Other vegetation that is not aquatic bed in > 1/3 vegetated area ..... points = 1 • Aquatic bed cover and open water > 2/3 of the unit..... points = 0 **Map with polygons of different vegetation types**	**Figure ___**
	Add the points in the boxes above	
L 2	**Does the wetland have the <u>opportunity</u> to improve water quality?** Answer YES if you know or believe there are pollutants in the lake water, or polluted surface water flowing through the unit to the lake. *Note which of the following conditions provide the sources of pollutants. A unit may have pollutants coming from several sources, but any single source would qualify as opportunity.* ____ Wetland is along the shores of a lake or reservoir that does not meet water quality standards ____ Grazing in the wetland or within 150 ft ____ Polluted water discharges to wetland along upland edge ____ Tilled fields or orchards within 150 ft. of wetland ____ Residential or urban areas are within 150 ft. of wetland ____ Parks with grassy areas that are maintained, ballfields, golf courses (all within 150 ft. of lake shore) ____ Power boats with gasoline or diesel engines use the lake ____ Other _____ YES multiplier is 2 NO multiplier is 1	*(see p.61)* Multiplier _____
◆	**<u>TOTAL</u> – Water Quality Functions** Multiply the score from L1 by L2; then ***add score to table on p. 1***	
	HYDROLOGIC FUNCTIONS – Indicators that wetland functions to reduce shoreline erosion.	
L 3	**Does the wetland have the <u>potential</u> to reduce shoreline erosion?**	*(see p.62)*
	L 3 Average width and characteristics of vegetation along the lakeshore *(do not include aquatic bed): (choose the highest scoring description that matches conditions in the wetland)* • 3/4 of distance is shrubs or forest at least 33 ft. (10m) wide ..... points = 6 • 3/4 of distance is shrubs or forest at least 6 ft. (2m) wide. ..... points = 4 • 1/4 of distance is shrubs or forest at least 33 ft. (10m) wide. ..... points = 4 • Vegetation is at least 6 ft. (2m) wide (any type except aquatic bed)..... points = 2 • Vegetation is less than 6 ft. (2m) wide (any type except aquatic bed) ..... points = 0 **Aerial photo or map with Cowardin vegetation classes**	**Figure ___**
	Record the points in the boxes above	
L 4	**Does the wetland have the <u>opportunity</u> to reduce erosion?** Are there features along the shore that will be impacted if the shoreline erodes? *Note which of the following conditions apply.* ____ There are human structures and activities along the upland edge of the wetland (buildings, fields) that can be damaged by erosion. ____ There are undisturbed natural resources along the upland edge of the wetland (e.g. mature forests, other wetlands) that can be damaged by shoreline erosion. ____ Other _____ YES multiplier is 2 NO multiplier is 1	*(see p. 64)* Multiplier _____
◆	**<u>TOTAL</u> – Hydrologic Functions** Multiply the score from L3 by L4; then ***add score to table on p. 1***	

Comments:

Wetland name or number W1_____

S	Slope Wetlands	Points
	WATER QUALITY FUNCTIONS – Indicators that wetland functions to improve water quality.	(only 1 score per box)
S 1	**Does the wetland have the <u>potential</u> to improve water quality?**	*(see p.64)*
	S 1.1 Characteristics of average slope of unit: • Slope is 1% or less *(a 1% slope has a 1 ft. vertical drop in elevation for every 100 ft. horizontal distance)*..... points = 3 • Slope is 1% - 2% ..... points = 2 • Slope is 2% - 5%. ..... points = 1 • Slope is greater than 5% ..... points = 0	
	S 1.2 The soil 2 inches below the surface (or duff layer) is clay, organic *(Use NRCS definitions).* YES = 3 points NO = 0 points	
	S 1.3 Characteristics of the vegetation in the wetland that trap sediments and pollutants: *Choose the points appropriate for the description that best fits the vegetation in the wetland. Dense vegetation means you have trouble seeing the soil surface (>75% cover), and uncut means not grazed or mowed and plants are higher than 6 inches.* • Dense, uncut, herbaceous vegetation > 90% of the wetland area..... points = 6 • Dense, uncut, herbaceous vegetation > 1/2 of area ..... points = 3 • Dense, woody, vegetation > 1/2 of area..... points = 2 • Dense, uncut, herbaceous vegetation > 1/4 of area ..... points = 1 • Does not meet any of the criteria above for vegetation ..... points = 0 **Aerial photo or map with vegetation polygons**	**Figure ___**
	Total for S 1 *Add the points in the boxes above*	
S 2	**Does the wetland have the <u>opportunity</u> to improve water quality?** Answer YES if you know or believe there are pollutants in groundwater or surface water coming into the wetland that would otherwise reduce water quality in streams, lakes or groundwater downgradient from the wetland? *Note which of the following conditions provide the sources of pollutants. A unit may have pollutants coming from several sources, but any single source would qualify as opportunity.* ____ Grazing in the wetland or within 150 ft ____ Untreated stormwater discharges to wetland ____ Tilled fields, logging, or orchards within 150 ft. of wetland ____ Residential, urban areas, or golf courses are within 150 ft. upslope of wetland ____ Other _____ YES multiplier is 2 NO multiplier is 1	*(see p. 67)* Multiplier _____
◆	**<u>TOTAL</u> – Water Quality Functions** Multiply the score from S1 by S2; then ***add score to table on p. 1***	
	HYDROLOGIC FUNCTIONS – Indicators that wetland functions to reduce flooding and stream erosion.	
S 3	**Does the wetland have the <u>potential</u> to reduce flooding and stream erosion?**	*(see p.68)*
	S 3.1 Characteristics of vegetation that reduce the velocity of surface flows during storms: *Choose the points appropriate for the description that best fits conditions in the wetland (stems of plants should be thick enough (usually > 1/8in), or dense enough to remain erect during surface flows).* • Dense, uncut, **rigid** vegetation covers > 90% of the area of the wetland ..... points = 6 • Dense, uncut, **rigid** vegetation> 1/2 area of wetland..... points = 3 • Dense, uncut, **rigid** vegetation > 1/4 area..... points = 1 • More than 1/4 of area is grazed, mowed, tilled, or vegetation is not rigid ..... points = 0	
	S 3.2 Characteristics of slope wetland that holds back small amounts of flood flows. The slope has small surface depressions that can retain water over at least 10% of its area. YES = 2 points NO = 0 points	
	Add the points in the boxes above	
S 4	**Does the wetland have the <u>opportunity</u> to reduce flooding and erosion?** Is the wetland in a landscape position where the reduction in water velocity it provides helps protect downstream property and aquatic resources from flooding or excessive and/or erosive flows? *Note which of the following conditions apply.* ____ Wetland has surface runoff that drains to a river or stream that has flooding problems ____ Other _____ *(Answer NO if the major source of water is controlled by a reservoir (e.g. wetland is a seep that is on the downstream side of a dam)* YES multiplier is 2 NO multiplier is 1	*(see p. 70)* Multiplier _____
◆	**<u>TOTAL</u> – Hydrologic Functions** Multiply the score from S3 by S4; then ***add score to table on p. 1***	

Comments:

Wetland name or number W1_____

These questions apply to wetlands of all HGM classes. HABITAT FUNCTIONS – Indicators that wetland functions to provide important habitat.	**Points** (only 1 score per box)
H 1 Does the wetland have the potential to provide habitat for many species?	
H 1.1 Vegetation structure *(see P. 72)*: *Check the types of vegetation classes present (as defined by Cowardin) – Size threshold for each class is 1/4 acre or more than 10% of the area if unit is smaller than 2.5 acres.* ____ Aquatic Bed __X__ Emergent plants __X__ Scrub/shrub (areas where shrubs have > 30% cover) X Forested (areas where trees have > 30% cover) *If the unit has a forested class check if:* _____The forested class has 3 out of 5 strata (canopy, sub-canopy, shrubs, herbaceous, moss/ground-cover) that each cover 20% within the forested polygon. *Add the number of vegetation types that qualify. If you have:* **Map of Cowardin vegetation classes** 4 structures or more..... points = 4 3 structures..... points = 2 2 structures..... points = 1 1 structure ..... points = 0	**Figure ___** 2
H 1.2 Hydroperiods *(see p.73)*: *Check the types of water regimes (hydroperiods) present within the wetland. The water regime has to cover more than 10% of the wetland or 1/4 acre to count (see text for descriptions of hydroperiods).* X Permanently flooded or inundated — 4 or more types present points = 3 __X__ Seasonally flooded or inundated — 3 or more types present.....points = 2 ____ Occasionally flooded or inundated — 2 types present.....points = 1 __X__ Saturated only — 1 type present .....points = 0 __X__ Permanently flowing stream or river in, or adjacent to, the wetland ____ Seasonally flowing stream in, or adjacent to, the wetland ____ **Lake-fringe wetland..... = 2 points** ____ **Freshwater tidal wetland..... = 2 points** **Map of hydroperiods**	**Figure ___** 3
H 1.3 Richness of Plant Species *(see p. 75)*: Count the number of plant species in the wetland that cover at least 10 ft^2 *(different patches of the same species can be combined to meet the size threshold)* *You do not have to name the species. Do not include Eurasian Milfoil, reed canarygrass, purple loosestrife, Canadian Thistle.* If you counted: > 19 species ..... points = 2 5 – 19 species..... points = 1 List species below if you want to: < 5 species ..... points = 0 _____ _____ _____ _____	2
H 1.4 Interspersion of Habitats *(see p. 76)*: Decided from the diagrams below whether interspersion between Cowardin vegetation (described in H1.1), or the classes and unvegetated areas (can include open water or mudflats) is high, medium, low, or none. 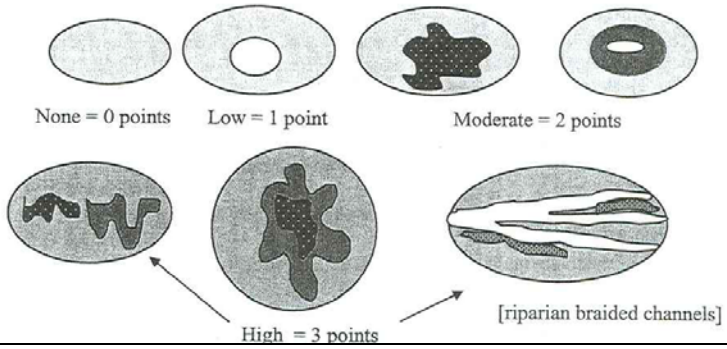 Note: If you have 4 or more classes or 3 vegetation classes and open water, the rating is always "high". **Use map of Cowardin classes.**	**Figure ___** 3
H 1.5 Special Habitat Features *(see p. 77)*: *Check the habitat features that are present in the wetland. The number of checks is the number of points you put into the next column.* __X__ Large, downed, woody debris within the wetland (> 4 in. diameter and 6 ft. long) __X__ Standing snags (diameter at the bottom > 4 inches) in the wetland ____ Undercut banks are present for at least 6.6 ft. (2m) and/or overhanging vegetation extends at least 3.3 ft. (1m) over a stream (or ditch) in, or contiguous with the unit, for at least 33 ft. (10m) ____ Stable steep banks of fine material that might be used by beaver or muskrat for denning (> 30 degree slope) OR signs of recent beaver activity are present *(cut shrubs or trees that have not yet turned grey/brown)* ____X At least 1/4 acre of thin-stemmed persistent vegetation or woody branches are present in areas that are permanently or seasonally inundated *(structures for egg-laying by amphibians)* ____ Invasive plants cover less than 25% of the wetland area in each stratum of plants *NOTE: The 20% stated in early printings of the manual on page 78 is an error.*	3
H 1 TOTAL Score – potential for providing habitat *Add the points in the column above*	13

Wetland name or number W1_____

H 2	**Does the wetland have the <u>opportunity</u> to provide habitat for many species?**	(only 1 score per box)
	H 2.1 <u>Buffers</u> *(see P. 80)*: *Choose the description that best represents condition of buffer of wetland unit. The highest scoring criterion that applies to the wetland is to be used in the rating. See text for definition of "undisturbed".* ____ 100m (330 ft) of relatively undisturbed vegetated areas, rocky areas, or open water > 95% of circumference. No structures are within the undisturbed part of buffer (relatively undisturbed also means no grazing, no landscaping, no daily human use)..... **points = 5** ____ 100m (330 ft) of relatively undisturbed vegetated areas, rocky areas, or open water > 50% circumference..... **points = 4** ____ 50m (170 ft) of relatively undisturbed vegetated areas, rocky areas, or open water > 95% circumference..... **points = 4** ____ 100m (330 ft) of relatively undisturbed vegetated areas, rocky areas, or open water > 25% circumference..... **points = 3** ____ 50m (170 ft) of relatively undisturbed vegetated areas, rocky areas, or open water for > 50% circumference ..... **points = 3** **If buffer does not meet any of the criteria above:** ____ No paved areas (except paved trails) or buildings within 25m (80 ft) of wetland > 95% circumference. Light to moderate grazing or lawns are OK ..... **points = 2** ____ No paved areas of buildings within 50m of wetland for > 50% circumference. Light to moderate grazing or lawns are OK..... **points = 2** ____ Heavy grazing in buffer ..... **points = 1** ____ Vegetated buffers are < 2m wide (6.6 ft) for more than 95% circumference (e.g. tilled fields, paving, basalt bedrock extend to edge of wetland)..... **points = 0** ____X Buffer does not meet any of the criteria above..... **points = 1** **Arial photo showing buffers**	**Figure ___** 1
	H 2.2 <u>Corridors and Connections</u> *(see p. 81)* H 2.2.1 Is the wetland part of a relatively undisturbed and unbroken vegetated corridor (either riparian or upland) that is at least 150 ft. wide, has at least a 30% cover of shrubs, forest or native undisturbed prairie, that connects to estuaries, other wetlands or undisturbed uplands that are at least 250 acres in size? *(Dams in riparian corridors, heavily used gravel roads, paved roads, are considered breaks in the corridor).* YES = **4 points** (go to H 2.3) NO = go to H 2.2.2 H. 2.2.2 Is the wetland part of a relatively undisturbed and unbroken vegetated corridor (either riparian or upland) that is at least 50 ft. wide, has at least 30% cover of shrubs or forest, and connects to estuaries, other wetlands or undisturbed uplands that are at least 25 acres in size? **OR a Lake-fringe** wetland, if it does not have an undisturbed corridor as in the question above? YES = **2 points** (go to H 2.3) NO = go to H 2.2.3 H. 2.2.3 Is the wetland: • Within 5 mi (8km) of a brackish or salt water estuary OR • Within 3 miles of a large field or pasture (> 40 acres) OR YES = 1 point • Within 1 mile of a lake greater than 20 acres? NO = 0 points	0

Comments:

	H 2.3 Near or adjacent to other priority habitats listed by WDFW (see p. 82): *(see new and complete descriptions of WDFW priority habitats, and the counties in which they can be found, in the PHS report http://wdfw.wa.gov/hab/phslist.htm)* Which of the following priority habitats are within 330 ft. (100m) of the wetland unit? *NOTE: the connections do not have to be relatively undisturbed.* ____ **Aspen Stands:** Pure or mixed stands of aspen greater than 0.4 ha (1 acre). ____ **Biodiversity Areas and Corridors**: Areas of habitat that are relatively important to various species of native fish and wildlife (*full descriptions in WDFW PHS report p. 152*). ____ **Herbaceous Balds:** Variable size patches of grass and forbs on shallow soils over bedrock. ____ **Old-growth/Mature forests:** (Old-growth west of Cascade crest) Stands of at least 2 tree species, forming a multi-layered canopy with occasional small openings; with at least 20 trees/ha (8 trees/acre) > 81 cm (32 in) dbh or > 200 years of age. **(**Mature forests) Stands with average diameters exceeding 53 cm (21 in) dbh; crown cover may be less that 100%; decay, decadence, numbers of snags, and quantity of large downed material is generally less than that found in old-growth; 80 - 200 years old west of the Cascade crest. ____ **Oregon white Oak:** Woodlands Stands of pure oak or oak/conifer associations where canopy coverage of the oak component is important (*full descriptions in WDFW PHS report p. 158*). ____ **Riparian**: The area adjacent to aquatic systems with flowing water that contains elements of both aquatic and terrestrial ecosystems which mutually influence each other. ____ **Westside Prairies:** Herbaceous, non-forested plant communities that can either take the form of a dry prairie or a wet prairie (*full descriptions in WDFW PHS report p. 161*). X__ **Instream:** The combination of physical, biological, and chemical processes and conditions that interact to provide functional life history requirements for instream fish and wildlife resources. ____ **Nearshore**: Relatively undisturbed nearshore habitats. These include Coastal Nearshore, Open Coast Nearshore, and Puget Sound Nearshore. (*full descriptions of habitats and the definition of relatively undisturbed are in WDFW report: pp. 167-169 and glossary in Appendix A).* ____ **Caves:** A naturally occurring cavity, recess, void, or system of interconnected passages under the earth in soils, rock, ice, or other geological formations and is large enough to contain a human. ____ **Cliffs:** Greater than 7.6 m (25 ft) high and occurring below 5000 ft. ____ **Talus:** Homogenous areas of rock rubble ranging in average size 0.15 - 2.0 m (0.5 - 6.5 ft), composed of basalt, andesite, and/or sedimentary rock, including riprap slides and mine tailings. May be associated with cliffs. ____ **Snags and Logs:** Trees are considered snags if they are dead or dying and exhibit sufficient decay characteristics to enable cavity excavation/use by wildlife. Priority snags have a diameter at breast height of > 51 cm (20 in) in western Washington and are > 2 m (6.5 ft) in height. Priority logs are > 30 cm (12 in) in diameter at the largest end, and > 6 m (20 ft) long. If wetland has **3 or more** priority habitats **= 4 points** If wetland has **2** priority habitats = **3 points** If wetland has **1** priority habitat **= 1 point** No habitats = 0 points Note: All vegetated wetlands are by definition a priority habitat but are not included in this list. Nearby wetlands are addressed in question H 2.4)	1
	H 2.4 Wetland Landscape: *Choose the **one** description of the landscape around the wetland that best fits (see p. 84)* • There are at least 3 other wetlands within 1/2 mile, and the connections between them are relatively undisturbed (light grazing between wetlands OK, as is lake shore with some boating, but connections should NOT be bisected by paved roads, fill, fields, or other development.....points = 5 • The wetland is Lake-fringe on a lake with little disturbance and there are 3 other lake-fringe wetlands within 1/2 mile .....points = 5 • There are at least 3 other wetlands within 1/2 mile, BUT the connections between them are disturbed. .....points = 3 • The wetland fringe on a lake **with** disturbance and there are 3 other lake-fringe wetlands within 1/2 mile.....points = 3 • There is at least 1 wetland within 1/2 mile .....points = 2 • There are no wetlands within 1/2 mile.....points = 0	3
	H 2 TOTAL Score – opportunity for providing habitat *Add the scores from H2.1, H2.2, H2.3, H2.4*	5
	TOTAL for H 1 from page 8	13
◆	**Total Score for Habitat Functions** Add the points for H 1 and H 2; then ***record the result on p. 1***	18

Comments:

Wetland name or number W1_____

CATEGORIZATION BASED ON SPECIAL CHARACTERISTICS

Please determine if the wetland meets the attributes described below and circle the appropriate answers and Category.

	Wetland Type – *Check off any criteria that apply to the wetland. Circle the Category when the appropriate criteria are met.*	
SC1	**Estuarine wetlands?** *(see p.86)* Does the wetland unit meet the following criteria for Estuarine wetlands? ____ The dominant water regime is tidal, ____ Vegetated, and ____ With a salinity greater than 0.5 ppt. YES = Go to SC 1.1 NO __X__	
	SC 1.1 Is the wetland unit within a National Wildlife Refuge, National Park, National Estuary Reserve, Natural Area Preserve, State Park or Educational, Environmental, or Scientific Reserve designated under WAC 332-30-151? YES = Category I NO = go to SC 1.2	**Cat. 1**
	SC 1.2 Is the wetland at least 1 acre in size and meets at least two of the following conditions? YES = Category I NO = Category II ____ The wetland is relatively undisturbed (has no diking, ditching, filling, cultivation, grazing, and has less than 10% cover of non-native plant species. If the non-native *Spartina* spp,. are only species that cover more than 10% of the wetland, then the wetland should be given a dual rating (I/II). The area of Spartina would be rated a Category II while the relatively undisturbed upper marsh with native species would be a Category 1. Do not, however, exclude the area of Spartina in determining the size threshold of 1 acre. ____ At least 3/4 of the landward edge of the wetland has a 100 ft. buffer of shrub, forest, or un-grazed or un-mowed grassland ____ The wetland has at least 2 of the following features: tidal channels, depressions with open water, or contiguous freshwater wetlands.	**Cat. I** **Cat. II** **Dual Rating I/II**
SC2	**Natural Heritage Wetlands** *(see p. 87)* Natural Heritage wetlands have been identified by the Washington Natural Heritage Program/DNR as either high quality undisturbed wetlands or wetlands that support state Threatened, Endangered, or Sensitive plant species. SC 2.1 Is the wetland being rated in a Section/Township/Range that contains a natural heritage wetland? *(This question is used to screen out most sites before you need to contact WNHP/DNR.)* S/T/R information from Appendix D _____ or accessed from WNHP/DNR web site _____ YES _____ Contact WNHP/DNR (see p. 79) and go to SC 2.2 NO _____ SC 2.2 Has DNR identified the wetland as a high quality undisturbed wetland or as a site with state threatened or endangered plant species? YES = Category 1 NO __X__ not a Heritage Wetland	**Cat I**
SC3	**Bogs** *(see p. 87)* Does the wetland **(or any part of the unit)** meet both the criteria for soils and vegetation in bogs? Use the key below to identify if the wetland is a bog. ***If you answer yes you will still need to rate the wetland based on its function.*** 1. Does the unit have organic soil horizons (i.e. layers of organic soil), either peats or mucks, that compose 16 inches or more of the first 32 inches of soil profile? (See Appendix B for a field key to identify organic soils)? YES = go to question 3 NO = go to question 2 2. Does the wetland have organic soils, either peats or mucks that are less than 16 inches deep over bedrock, or an impermeable hardpan such as clay or volcanic ash, or that are floating on a lake or pond? YES = go to question 3 NO = is not a bog for purpose of rating 3. Does the unit have more than 70% cover of mosses at ground level, AND other plants, if present, consist of the "bog" species listed in Table 3 as a significant component of the vegetation (more than 30% of the total shrub and herbaceous cover consists of species in Table 3)? YES = Is a bog for purpose of rating NO = go to question 4 NOTE: If you are uncertain about the extent of mosses in the understory you may substitute that criterion by measuring the pH of the water that seeps into a hole dug at least 16" deep. If the pH is less than 5.0 and the "bog" plant species in Table 3 are present, the wetland is a bog. 4. Is the unit forested (> 30% cover) with sitka spruce, subalpine fir, western red cedar, western hemlock, lodgepole pine, quaking aspen, Englemann's spruce, or western white pine. WITH any of the species (or combination of species) on the bog species plant list in Table 3 as a significant component of the ground cover *(> 30% coverage of the total shrub/herbaceous cover*)? YES = Category I NO = Is not a bog for purpose of rating	**Cat. I**

SC4	**Forested Wetlands** *(see p. 90)* Does the wetland have at least 1 acre of forest that meet one of these criteria for the Department of Fish and Wildlife's forests as priority habitats? *If you answer yes you will still need to rate the wetland based on its function.* ____ **Old-growth forests**: (west of Cascade Crest) Stands of at least two three species forming a multi-layered canopy with occasional small openings; with at least 8 trees/acre (20 trees/hectare) that are at least 200 years of age OR have a diameter at breast height (dbh) of 32 inches (81 cm or more). NOTE: The criterion for dbh is based on measurements for upland forests. Two-hundred year old trees in wetlands will often have a smaller dbh because their growth rates are often slower. The DFW criterion is and "OR" so old-growth forests do not necessarily have to have trees of this diameter. ____ **Mature forests**: (west of the Cascade Crest) Stands where the largest trees are 80 – 200 years old OR have an average diameters (dbh) exceeding 21 inches (53 cm); crown cover may be less than 100%; decay, decadence, numbers of snags, and quantity of large downed material is generally less than that found in old-growth. YES = Category I NO = __X__ not a forested wetland with special characteristics	**Cat. I**
SC5	**Wetlands in Coastal Lagoons** *(see p. 91)* Does the wetland meet all of the following criteria of a wetland in a coastal lagoon? ____ The wetland lies in a depression adjacent to marine waters that is wholly or partially separated from marine waters by sandbanks, gravel banks, shingle, or, less frequently, rocks. ____ The lagoon in which the wetland is located contains surface water that is saline or brackish (> 0.5 ppt) during most of the year in at least a portion of the lagoon *(needs to be measured near the bottom.)* YES = Go to SC 5.1 NO __X__ not a wetland in a coastal lagoon SC 5.1 Does the wetland meet all of the following three conditions? ____ The wetland is relatively undisturbed (has no diking, ditching, filling, cultivation, grazing) and has less than 20% cover of invasive plant species (see list of invasive species on p. 74). ____ At least 3/4 of the landward edge of the wetland has a 100 ft. buffer of shrub, forest, or un-grazed or un-mowed grassland. ____ The wetland is larger than 1/10 acre (4350 square ft.) YES = Category I NO = Category II	**Cat. I** **Cat. II**
SC6	**Interdunal Wetlands** *(see p. 93)* Is the wetland west of the 1889 line (also called the Western Boundary of Upland Ownership or WBUO)? YES = Go to SC 6.1 NO __X__ not an interdunal wetland for rating ***If you answer yes you will still need to rate the wetland based on its functions.*** In practical terms that means the following geographic areas: • Long Beach Peninsula -- lands west of SR 103 • Grayland-Westport -- lands west of SR 105 • Ocean Shores-Copalis – lands west of SR 115 and SR 109 SC 6.1 Is the wetland one acre or larger, or is it in a mosaic of wetlands that is one acre or larger? YES = Category II NO = go to SC 6.2 SC 6.2 Is the wetland between 0.1 and 1 acre, or is it in a mosaic of wetlands that is between 0.1 and 1 acre? YES = Category III	**Cat. II** **Cat. III**
◆	**Category of wetland based on Special Characteristics** *Choose the "highest" rating if wetland falls into several categories, and record on p. 1.* If you answered NO for all types enter "Not Applicable" on p. 1	

Comments: