City of Bellevue
Development Services Department
Land Use Division Staff Report

Proposal Name:	Volwiler Short Plat
Proposal Address:	3808 120th Ave SE
Proposal Description:	Preliminary Short Plat to subdivide an existing 15,687 square foot lot in the R-5 zoning district into two single family lots.
File Number:	08-114160-LN
Applicant:	Group Four Inc, Raelyn Hulquist
Decisions Included:	Administrative Decision for a Preliminary Short Plat through Process II, Land Use Code 20.35.200.
State Environmental Policy Act Threshold Determination:	Exempt (WAC 197-11-800(6)(a))
Department Decision:	**Approval with Conditions**

Leah Hyatt

Leah Hyatt Assistant Land Use Planner
Development Services Department

Application Date:	April 14, 2008
Notice of Application:	May 1,2008
Decision Publication Date:	July 24, 2008
Appeal Deadline:	August 7, 2008

For information on how to appeal a proposal, visit Development Services at City Hall or call (425) 452-6800 [TTY (425) 452-4636]. Appeal of the Decision must be made with the City Clerk by 5 PM on the date noted for appeal of the decision.

I. Description of Proposal

The applicant proposes to short plat an existing 15,747 square foot parcel into two single family lots in the R-5 zoning district. Lot 1 is proposed to be 7,201 square feet and Lot 2 is proposed to be 8,546 square feet. The existing parcel is located at 3808 120th Ave SE; the existing residence will remain on Lot 1.

II. Site Description and Context

The site is located in a community of single family residential homes in the Factoria Subarea of the Comprehensive Plan. The site slopes gradually downwards from the west to the east. The site contains no significant trees. Primary access is gained from 120th Ave SE via a 20-foot wide joint use access easement which will serve both new lots. Both lots meet the 7,200 square foot minimum lot size in the R-5 zone.

Consistency with Land Use Code/Zoning Requirements

A. Special District Requirements (Critical Area Overlay District LUC. 20.25H)

The site contains no Critical Areas as defined in LUC Section 20.25H.

B. Consistency with Standard Land Use Code Requirements

BASIC INFORMATION			
Zoning District	R-5		
Gross Site Area	15,747 sq. ft.		
ITEM	**REQ'D/ALLOWED**	**PROPOSED**	
		Lot 1	Lot 2
Minimum Lot Area	60 feet	7,201 sq. ft.	8,546 sq. ft.
Minimum Lot Depth	80 feet	63 ft.	63 ft.
Minimum Lot Depth	80 feet	117 ft.	138 ft.
Building Setbacks			
Front Yard	20 feet	20 feet	
Rear Yard	20 feet	20 feet	
Min. Side Yard	5 feet	5 feet	
2 Side Yard	15 feet	15 feet	
Access Easement	10 feet	10 feet	
Tree Retention	15%	n/a – no significant trees on site	

IV. State Environmental Policy Act (SEPA)

There are no Critical Areas located on the subject property. Short Plats not containing Critical Areas are exempt from SEPA review pursuant to WAC 197-11-800(6)(a).

V. Summary of Technical Reviews

A. Utilities Review

The preliminary short plat application has been reviewed and no further utility revisions are needed at this time. The Utility Department approval is based on the conceptual utility design only. See Section VIII of this report for Utilities Department related condition of approval.

B. Transportation Review:

The Transportation Department has reviewed the plans submitted for the preliminary short plat and recommends approval. The final engineering plans must show all transportation-related improvements and must be consistent with the Transportation Development Code (BCC 14.60) and the Transportation Design Manual prior to approval of the plat infrastructure permit. Prior to final short plat approval, the developer must provide all transportation improvements at the developer's expense (BCC 14.60.110) or provide an acceptable financial assurance device equivalent to 150% of the cost of unfinished improvements. See Section VIII for related conditions of approval.

Under BCC 22.16, payment of the transportation impact fee for each new house will adequately mitigate off-site transportation impacts. The fee amount is subject to periodic revision by the city council. Builders will pay the fee in effect at the time of building permit issuance. See Section VIII for a related condition of approval.

Use of the Right of Way

Applicants often request use of the right of way and of pedestrian easements for materials storage, construction trailers, hauling routes, fencing, barricades, loading and unloading and other temporary uses as well as for construction of utilities and street improvements. A Right of Way Use Permit for such activities must be acquired prior to issuance of any construction permit including demolition permit. See Section VIII for a related conditions of approval.

Street Frontage Improvements

The adjacent properties along 120th Avenue SE do not have street frontage improvements (curb, gutter, sidewalk) in front of them. Hence, curb, gutter and sidewalk are not required to be installed by the developer. However, the open ditch in front of the property is to be filled to provide a 6 foot wide graded shoulder walk surface.

Site Access

Access to Lots 1 and 2 will be from a joint driveway off of 120th Avenue SE. The existing single driveway serving Lot 2 will be widened and paved to serve as the joint use driveway. The paved width of the joint use driveway will be a minimum of sixteen feet within a twenty foot access easement and will be built per the City's Transportation Department Design Manual Standard Drawing DEV-7. See Section VIII for related conditions of approval.

Pavement Restoration

The City of Bellevue has established the Trench Restoration Program to provide developers with guidance as to the extent of resurfacing required when a street has been damaged by trenching or other activities. Under the Trench Restoration Program, every public street in the City of Bellevue has been examined and placed in one of three categories based on the street's condition and the period of time since it was last resurfaced. These three categories are, "No Street Cuts Permitted", "Overlay Required", and "Standard Trench Restoration". Each category has different trench restoration requirements associated with it. Near the development site 120th Avenue SE is classified as "Overlay Required". See Section VIII for a related condition of approval.

Transportation Impacts and Mitigation

City staff has analyzed the potential short term operational impacts of this proposal in order to recommend mitigation if necessary. These impacts included traffic operations conditions during the a.m. and p.m. peak hours. The Volwiler short plat proposes the addition of one new single family house the and thereby leads to an increase of one new PM peak hour trip. The addition of one new PM peak hour trip is not expected to have a significant impact on the traffic conditions of the adjacent street system.

VI. Public Notice and Community Input

Application Date:	May 1, 2008
Public Notice (500 feet):	May 1, 2008(Includes sign installation at the site)
Minimum Comment Period:	May 15, 2008

Notice of Application was published in the City of Bellevue's *Land Use Bulletin* and the *Seattle Times* on May 1, 2008. It was mailed to property owners within 500 feet of the project site and a Public Information Sign was installed on the project site on the same day. No comments were received from the public.

VII. Decision Criteria:

20.45B.130B Decision Criteria for a Preliminary Short Plat.

The Director may approve or approve with modifications an application for a Preliminary Short Plat if:

1. **The Preliminary Short Plat makes appropriate provisions for, but not limited to, the public health, safety and general welfare, for open spaces, drainage ways, streets, sidewalks, alleys, other public ways, water supplies, sanitary waste.**

   Finding: City codes ensure public health, safety and general welfare through development code requirements. The site is accessed via 120th Ave SE, an improved public street. The applicant will be required to provide drainage improvements designed to service the drainage needs of the site. Existing public water and sewer facilities have been deemed adequate to serve the proposed development.

2. **The public interest is served by the short subdivision.**

Finding: The public interest is served by providing additional housing opportunities in accordance with the Comprehensive Plan while ensuring compliance with City codes and standards.

3. **The preliminary short plat appropriately considers the physical characteristics of the proposed short subdivision site.**

Finding: The preliminary short plat considers the physical characteristics of the site by limiting topographic modifications and meeting impervious surface requirements of LUC Section 20.20.010.

4. **The proposal complies with all applicable provisions of the Land Use Code (BCC Title 20), the Utility Code (BCC Title 24), and the City of Bellevue Development Standards.**

Development Standards

Finding: The proposal complies with the Land Use Code requirements for R-5 zoning, the Utility Code and the City of Bellevue Development Standards.

Land Use Code Requirements

A. **Dimensional Requirements**: The site is currently zoned single-family R-5 which has a minimum lot size requirement of 7,200 square feet. The dimensional requirements for the R-5 zoning district include:

20'	Front Yard Setback
20'	Rear Yard Setback
5'	Side Yard Setback
15'	Two Side Yard Setback
30'	Maximum Building Height
40%	Maximum Lot Coverage by Structure
55%	Maximum Coverage by Impervious Surface
60'	Minimum Lot Width
80'	Minimum Lot Depth
50%	Minimum Greenscape

Finding: Both lots can be developed in accordance with the City of Bellevue Land Use Code requirements including the R-5 dimensional requirements.

B. **Significant Tree Preservation**: The tree preservation requirements under LUC Section 20.20.900 to save 15 percent of significant trees on the site apply to this proposal.

Finding: There are no significant trees located on site.

5. **The proposal is in accord with the Comprehensive Plan (BCC Title 21).**

Finding: The site is located within the Factoria Subarea of the Comprehensive Plan. The Comprehensive Plan specifies single-family high density for this property. The proposal complies with applicable Comprehensive Plan policies city-wide and for this Subarea:

The single family homes are, by use type, compatible with surrounding neighborhoods. The proposal provides new housing as encouraged by the Comprehensive Plan (Policy LU-13). The proposed short plat provides housing for Bellevue's share of the regionally adopted demand forecasts for residential uses for the next 20 years (LU-3).

The proposal meets Comprehensive Plan polices to maintain good surface water quality (EN-33), restrict surface water runoff to predevelopment levels (EN-37), and provide traffic mitigation (TR-35).

The proposal meets utility standards (UT-1), provides development on infill or under-utilized sites with adequate urban services (HO-3), and meets the Neighborhood Quality goal (Housing Element) to ensure compatible housing and environmentally sensitive features.

6. **Each lot in the proposal can reasonably be developed in conformance with current Land Use Code requirements without requiring a variance.**

Finding: Each lot can reasonably be developed to current R-5 zoning standards without requiring a variance. The proposed lots meet minimum standards for lot width, lot depth, and lot area of the R-5 land use district. There are no environmental factors which further inhibit the development of this property that would warrant a variance. <u>See related condition of approval in Section VIII.</u>

7. **All necessary utilities, streets or access, drainage and improvements are planned to accommodate the potential use of the entire property.**

Finding: The Utilities and Transportation Departments have reviewed the preliminary short plat and determined that all necessary utilities, drainage, driveway access, necessary sidewalk easements and other required improvements are existing, planned or conditioned as part of this approval to accommodate the use of these lots.

VII. Conclusion and Decision:

After conducting the various administrative reviews associated with this proposal, including applicable Land Use consistency, SEPA, City Code, and standard compliance reviews, the Director of Planning and Community Development does hereby **approve** the Volwiler Preliminary Short Plat **with conditions**.

This approval automatically expires and is void if the applicant fails to file for approval of the final short plat within one year of the effective date of approval unless the applicant files for an extension at least 30 days prior to the expiration and the extension is granted pursuant to LUC 20.45B.150 and .160.

VIII. Conditions of Approval:

The following conditions are imposed under authority referenced:

Compliance with Bellevue City Codes and Ordinances

The applicant shall comply with all applicable Bellevue City Codes, Standards, and Ordinances including but not limited to:

Applicable Codes, Standards and Ordinances	Contact Person
Clearing & Grading Code – BCC 23.76	Janney Gwo, 425-452-6190
Construction Codes – BCC Title 23	Build. Division, 425-452-6864
Fire Code – BCC 23.11	Adrian Jones, 425-452-6032
Land Use Code – BCC Title 20	Leah Hyatt, 425-452-6834
Noise Control – BCC 9.18	Leah Hyatt, 425-452-6834
Sign Code – BCC Title 22	Leah Hyatt, 425-452-6834
Transportation Development Code – BCC 14.60	Rohini Nair, 425-452-2569
Right of Way Use Code – BCC 14.30	Tim Stever, 425-452-4294
Transportation Department Design Manual	Rohini Nair, 425-452-2569
Traffic Standards Code 14.10	Rohini Nair, 425-452-2569
Utility Code – BCC Title 24	Brad Ayers, 425-452- 6054

A. General Conditions

1. Utilities Department Approval

The Utilities Department approval of the Preliminary Short Plat Application is based on the preliminary utility design. Final civil engineering of the utility design may require changes to the site layout to accommodate the Utilities. The water, sewer, and storm drainage systems shall be designed per the current City of Bellevue Utility Codes and Utility Engineering Standards. Utilities design review plan approval and field inspection will be performed through the Utilities permit processing desk at City Hall when permits for water, sewer and storm are applied for. All water, sewer and storm easements will be recorded on the face of the final short plat document.

Authority: Bellevue City Code Title 24.02, 24.04, 24.06
Reviewer: Brad Ayers, Utilities Department

2. Noise – Construction Hours

All proposed development activity resulting from approval of this land use action will be subject to normal construction hours of 7am to 6 pm Monday through Saturday except for

Federal holidays and as further defined by the Bellevue City Code. Proximity to existing residential uses will be given special consideration. Upon written request to PCD, work hours may be extended to 10 pm if the criteria for extension of work hours as stated in BCC 9.18 can be met.

Authority: Bellevue City Code 9.18
Reviewer: Leah Hyatt, Development Services Department

B. Prior to Issuance of any Plat Engineering/Clear and Grade Permit:

1. Right of Way Use Permit

The applicant is required to apply for a Right of Way Use Permit before the issuance of any clearing and grading, building, foundation, or demolition permit. In some cases, more than one Right of Way Use Permit may be required, such as one for hauling and one for construction work within the right of way. A Right of Way Use Permit regulates activity within the city right of way, including but not limited to the following:

a) Designated truck hauling routes.
b) Truck loading and unloading activities.
c) Hours of construction and hauling.
d) Temporary traffic control and pedestrian detour routing for construction activities.
e) Street sweeping and maintenance during excavation and construction.
f) Location of construction fences.
g) Parking for construction workers.
h) Construction vehicles, equipment, and materials in the right of way.
i) All other construction activities as they affect the public street system.

In addition, the applicant shall submit for review and approval a plan for providing pedestrian access during construction of this project. Access shall be provided at all times during the construction process, except when specific construction activities such as shoring, foundation work, and construction of frontage improvements prevents access. General materials storage and contractor convenience are not reasons for preventing access.

Authority: Bellevue City Code 14.30
Reviewer: Tim Stever, Transportation Department

2. Off-Street Parking

The applicant must secure sufficient off-street parking for construction workers, equipment, and materials storage before the issuance of a clearing and grading, building, foundation or demolition permit.

Authority: Bellevue City Code 14.30
Reviewer: Tim Stever, Transportation Department

3. Engineering Plans

A civil engineering plan produced by a qualified engineer must be approved by the City prior to clearing and grading permit approval. The design of all transportation improvements must be in conformance with the requirements of the Americans with Disabilities Act, the Transportation Development Code and the provisions of the Transportation Department Design Manual. The engineering plans must correctly show all transportation-related engineering details, including but not limited to, the design of the joint use driveway, the connection to 120th Avenue SE, the filled ditch and the 6 foot wide walk surface, pavement restoration in 120th Avenue SE, mailbox location, and sight distance. Appropriate standard drawings from the Transportation Department Design Manual must be included in the engineering plans.

Authority: Bellevue City Code 14.60; Transportation Department Design Manual
Reviewer: Rohini Nair, Transportation Department

4. Sight Distance

If necessary to meet the sight distance requirements of BCC 14.60.240 and standard drawing TE-1, trimming and removal of vegetation and/or obstacles near the access point on 120th Avenue SE may be needed. Ground vegetation within the sight triangle must be trimmed to no more than 2.5 feet above a line drawn from pavement level to pavement level. Trees within the sight triangle must be limbed up to a height of 7.5 feet above a line drawn from pavement level to pavement level. A description of any required vegetation trimming must be shown on a sheet of the clearing and grading plan set.

Authority: Bellevue City Code 14.60.240
Reviewer: Rohini Nair, Transportation Department

5. Pavement Restoration

The city's pavement manager has determined that this segment of 120th Avenue SE will require overlay pavement restoration for any utility connections or other digging in the street surface. Pavement restoration must meet the requirements of Section 21 of the Design Manual and standard drawings ROW-1 through ROW-5. Exact copies of the appropriate pavement restoration drawing(s) must be included in the final engineering plans.

Authority: Bellevue City Code 14.60.250 and Design Manual Design Standard # 21
Reviewer: Tim Stever, Transportation Department

C. Prior to Final Short Plat Approval:

1. Variance Restriction

Approval by the City of this short plat is a determination that each lot in the short plat can be reasonably developed in conformance with the Land Use Code requirements in effect at the time of preliminary short plat approval without requiring a variance. The following language shall be placed on the final short plat

document:

"Variance Restriction: Approval by the City of this short plat is a determination that each lot in the short plat can be reasonably developed in conformance with the Land Use Code requirements in effect at the time of preliminary short plat approval without requiring a variance."

Authority: Land Use Code 20.45B.130.A.6
Reviewer: Leah Hyatt, Development Services Department

2. Infrastructure Improvements

All transportation improvements shown in the final engineering plans or required by city codes and standards must be either completed prior to approval of the final short plat or provided for with a financial assurance device. Land Use Code Section 20.40.490 allows a developer to obtain final short plat approval prior to finishing improvements with provision of an acceptable financial assurance device equivalent to 150% of the cost of unfinished infrastructure improvements. Provision of such an assurance device requires completion of the improvements by the developer within two years of final short plat approval. Installation of improvements that would negatively affect safety if left unfinished may not be delayed through use of a financial assurance device. Improvements must be approved by the Transportation Department inspector before they are deemed complete. Specific requirements are detailed below:

a) Miscellaneous:

- Driveway slope shall be limited to a maximum grade of 10% for the first 20 feet from the road and limited to a maximum grade of 15% afterwards.
- Vehicle sight distance must be provided per BCC 14.60.240 and 14.60.241.
- Minimum paved width of joint use driveway is 16 feet and minimum easement width for joint use driveway is 20 feet

b) Street frontage improvement

- Fill the ditch along 120th Avenue SE, provide drainage pipe for storm water drainage, and provide a 6 feet wide graded shoulder walk surface.

Authority: Bellevue City Code 14.60.100, 110, 130, 150, 170, 190, 210, 240, 241; LUC 20.40.490 Transportation Department Design Manual Sections 3, 4, 5, 7, 11, 14, 19
Reviewer: Rohini Nair, Transportation Department

3. Access Design and Maintenance

The final short plat map must include a note that specifies that the owners of lots served by the joint use driveway are jointly responsible for maintenance and repair of the joint use

driveway. Also, the final short plat map must include a note that specifies that the joint use driveway will remain open at all times for emergency and public service vehicles and shall not be gated or obstructed.

Authority: Bellevue City Code 14.60.130
Reviewer: Rohini Nair, Transportation Department

D. Prior to Issuance of Single Family Building Permit:

1. Transportation Impact Fee

Payment of the traffic impact fee will be required at the time of single family building permit issuance. The current impact fee in traffic impact fee area 7 is $ 429.80 per new dwelling. This fee is subject to change and the fee schedule in effect at the time of building permit issuance will apply.

Authority: Bellevue City Code 22.16
Reviewer: Rohini Nair, Transportation Department

List of Attachments

A. Plans and Drawings
B. Zoning Map
C. Vicinity Map

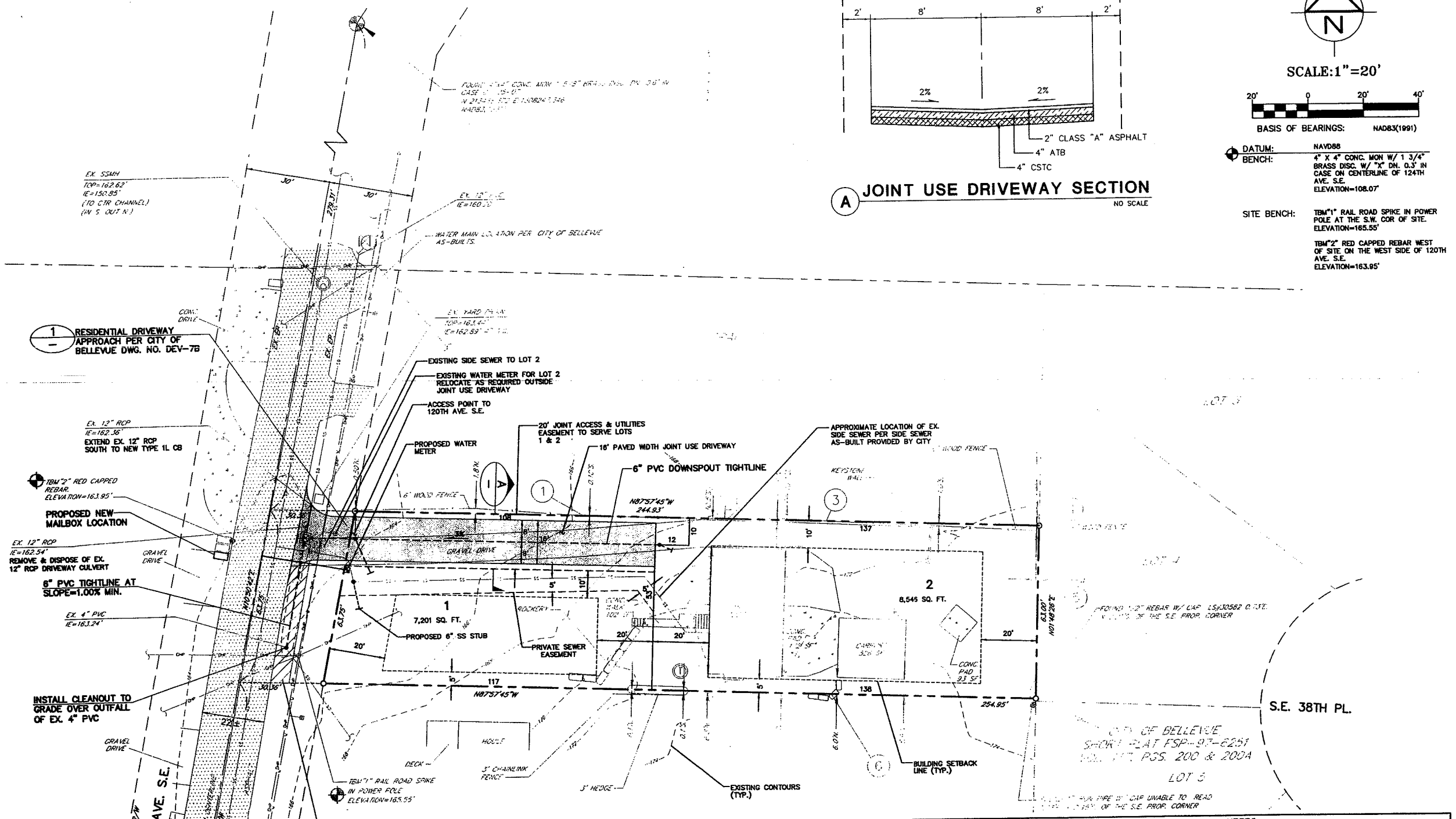

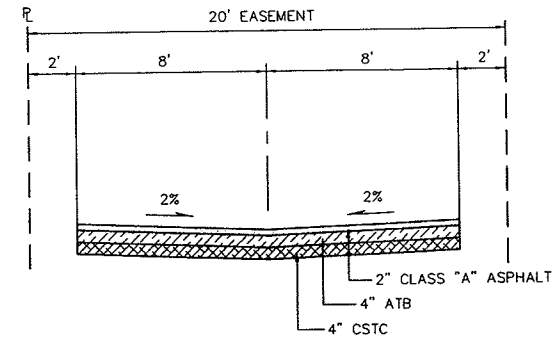

A JOINT USE DRIVEWAY SECTION

NO SCALE

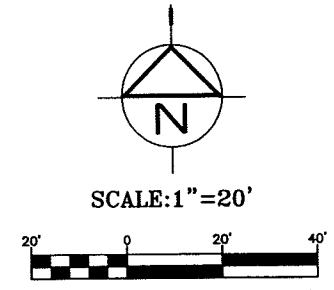

DATUM: NAVD88

BENCH: 4" X 4" CONC. MON W/ 1 3/4" BRASS DISC. W/ "X" ON. 0.3' IN CASE ON CENTERLINE OF 124TH AVE. S.E. ELEVATION=108.07'

SITE BENCH: TBM"1" RAIL ROAD SPIKE IN POWER POLE AT THE S.W. COR OF SITE. ELEVATION=165.55'

TBM"2" RED CAPPED REBAR WEST OF SITE ON THE WEST SIDE OF 120TH AVE. S.E. ELEVATION=163.95'

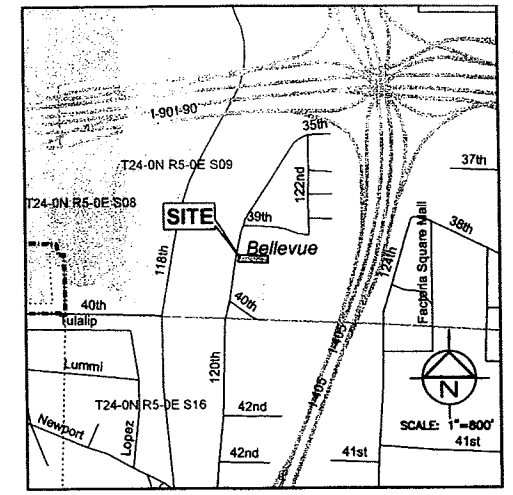

VICINITY MAP

PROJECT INFORMATION

OWNER/APPLICANT.....CRAIG VOLWILER
3808 120TH AVE. S.E.
BELLEVUE, WA. 98006
PHONE: (425) 260-0928

SURVEYOR/ENGINEER.....GROUP FOUR, INC.
16030 JUANITA WOODINVILLE WY. N.E.
BOTHELL, WA. 98011
PHONE: (425) 775-4581
CONTACT: RAELYN HULQUIST

SITE ADDRESS.....3808 120TH AVE. S.E.
BELLEVUE, WA. 98006

KING COUNTY PARCEL NO.....544830 0380

AREA.....0.36 AC. (15,746 SQ. FT.)

EXISTING ZONING.....R-5

LOTS.....2

IMPERVIOUS AREA ANALYSIS

LOT 2 EXISTING LOT AREA.....8,546 SF
R5 ZONE - MAX ALLOWABLE IMPERVIOUS SURFACE AREA.....55%
LOT 2 TOTAL EXISTING IMPERVIOUS SURFACE AREA.....2,416 SF
LOT 2 IMPERVIOUS SURFACE PERCENTAGE.....28%

LOT COVERAGE ANALYSIS

LOT 2 EXISTING LOT AREA.....8,546 SF
R5 ZONE - MAX ALLOWABLE LOT COVERAGE AREA.....40%
LOT 2 TOTAL EXISTING LOT COVERAGE AREA.....1,749 SF
LOT 2 TOTAL LOT COVERAGE PERCENTAGE.....20%

LEGAL DESCRIPTION

THE SOUTH 63 FEET IN WIDTH OF TRACT 41, MERCER, ACCORDING TO THE PLAT THEREOF, RECORDED IN VOLUME 17 OF PLATS, PAGE 8, RECORDS OF KING COUNTY, WASHINGTON; SITUATE IN THE CITY OF BELLEVUE, COUNTY OF KING, STATE OF WASHINGTON.

NOTES:

1. TWO (2) PARKING STALLS PER UNIT TO BE PROVIDED PURSUANT TO LUC 20.20.590F.
2. NO PARKING ALLOWED ON THE 16' JOINT USE DRIVEWAY.
3. A HALF-STREET OR FULL-STREET (DEPENDING ON THE EXTENT OF STREET CUTS OR DAMAGE) GRIND AND OVERLAY WILL BE REQUIRED. THE EXTENT OF THE REQUIRED PAVEMENT RESTORATION WILL BE SPECIFIED WITH THE RIGHT-OF-WAY PERMIT FOR THIS PROJECT.
4. NO FIXED OBJECTS (ANYTHING WITH BREAKAWAY CHARACTERISTICS, GREATER THAN A 4"x4" WOODEN POST) ARE ALLOWED WITHIN 10' OF A DRIVEWAY EDGE.
5. THE PRIVATE STORM DRAINAGE CONVEYANCE SYSTEM IS FOR THE BENEFIT OF LOTS 1 AND 2. THE COST OF MAINTENANCE, REPAIRS, OR REPLACEMENT OF THAT PORTION OF THE STORM LINE USED IN COMMON SHALL BE BORNE IN EQUAL SHARES, EXCEPT THAT THE OWNERS OF ANY LOWER PARCEL SHALL NOT BE RESPONSIBLE FOR THE PART OF THE STORM LINE ABOVE THEIR CONNECTION, AND WHEN NECESSARY TO CLEAN, REPAIR OR RECONSTRUCT THE STORM LINE THE PARTIES SHALL HAVE A RIGHT OF ENTRY FOR THAT PURPOSE.
6. THE PRIVATE SIDE SEWER IS FOR THE BENEFIT OF LOTS 1 AND 2. THE COST OF MAINTENANCE, REPAIRS, OR REPLACEMENT OF THAT PORTION OF THE SEWER LINE USED IN COMMON SHALL BE BORNE IN EQUAL SHARES, EXCEPT THAT THE OWNERS OF ANY LOWER PARCEL SHALL NOT BE RESPONSIBLE FOR THE PART OF THE SEWER LINE ABOVE THEIR CONNECTION, AND WHEN NECESSARY TO CLEAN, REPAIR OR RECONSTRUCT THE SEWER LINE THE PARTIES SHALL HAVE A RIGHT OF ENTRY FOR THAT PURPOSE.

FENCE TIES

1. 6' WOOD FENCE CROSSES N. PROP. LINE 0.5' OF THE N.W. PROP. CORNER
2. 6' WOOD FENCE CROSSES N. PROP. LINE 0.5' OF THE N.E. PROP. CORNER
3. 6' WOOD FENCE CROSSES N. PROP. LINE 0.5' OF THE N.E. PROP. CORNER
4. N.E. CORNER OF 6' WOOD FENCE 0.3' N. OF THE N.E. PROP. CORNER
5. 6' WOOD FENCE CROSSES E. PROP. LINE 0.5' OF THE N.E. PROP. CORNER
6. RIVER ROCK WALL CROSSES S. LINE 0.5' OF THE S.E. PROP. CORNER

NOTES:

1. SAWCUT AND TACK ROAD TO DRIVEWAY APPROACH JOINT.
2. DRIVEWAY APPROACH TO BE 6" HMA CLASS ½" PG 64-22 ASPHALT IN 2" LIFTS.
3. HOT MIX ASPHALT OR CONCRETE TO BE PLACED OVER COMPACTED SUBGRADE AND 4" OF CSTC COMPACTED TO 95%.
4. APPROACH SLOPE AND EDGE RADIUS TO BE DETERMINED BY THE ENGINEER.
5. SEE TABLE 2 FOR DRIVEWAY TRANSITION GRADES. MAXIMUM GRADE BEYOND TRANSITION GRADE IS 15%.
6. DRIVEWAY APPROACH SHALL NOT CONTAIN REINFORCING STEEL.

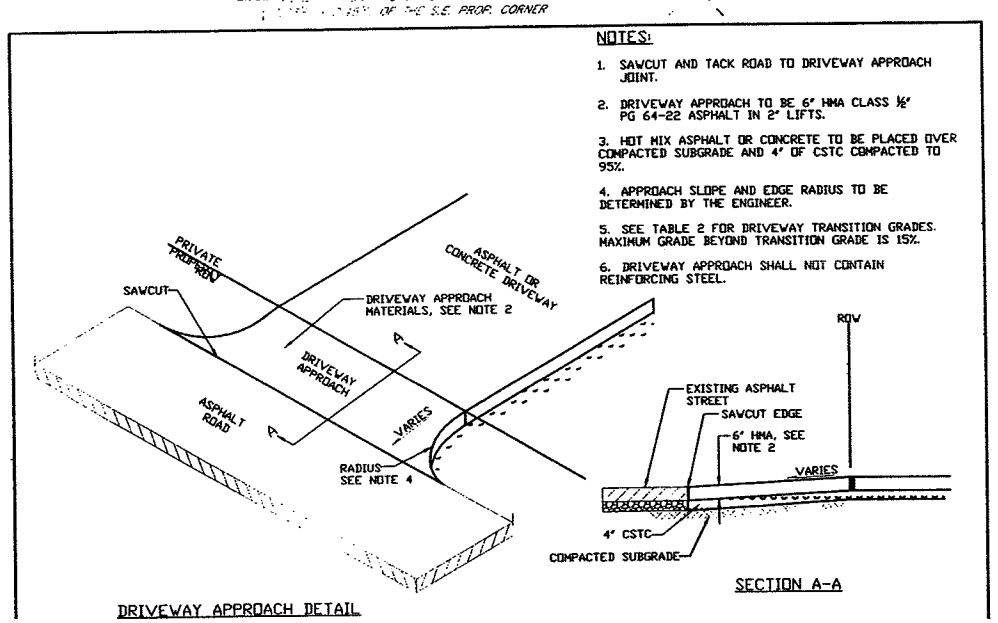

DRIVEWAY APPROACH DETAIL

SECTION A-A

GROUP FOUR, Inc.
Land Surveying // Civil Engineering
Land Use Planning // Biological Sciences
16030 JUANITA-WOODINVILLE WAY NE BOTHELL, WASHINGTON 98011
(425)775-4581 * (206)362-4244 * FAX(206)362-3819 * www.GRP4.com

FILENAME: P:\Proj\CVF-0203\dwg\Preliminary\Vpreli.dwg
UPDATED: 6/12/2008 9:46:36 AM 6:1 ZLCK

VOLWILER
PRELIMINARY SHORT PLAT
SITE PLAN / ROAD PLAN

WASHINGTON

RECEIVED
JUN 17 2008
PERMIT PROCESSING
CITY OF BELLEVUE

CALL 48 HOURS

CLEARING AND GRADING STANDARD NOTES

- ALL CLEARING & GRADING CONSTRUCTION MUST BE IN ACCORDANCE WITH CITY OF BELLEVUE (COB) CLEARING & GRADING CODE; CLEARING & GRADING EROSION CONTROL STANDARD DETAILS (EC-1 THROUGH EC-23); DEVELOPMENT STANDARDS; LAND USE CODE; UNIFORM BUILDING CODE; PERMIT CONDITIONS; AND ALL OTHER APPLICABLE CODES, ORDINANCES, AND STANDARDS. THE DESIGN ELEMENTS WITHIN THESE PLANS HAVE BEEN REVIEWED ACCORDING TO THESE REQUIREMENTS. ANY VARIANCE FROM ADOPTED EROSION CONTROL STANDARDS IS NOT ALLOWED UNLESS SPECIFICALLY APPROVED BY THE CITY OF BELLEVUE DEPARTMENT OF PLANNING & COMMUNITY DEVELOPMENT (PCD) PRIOR TO CONSTRUCTION.

IT IS THE SOLE RESPONSIBILITY OF THE APPLICANT AND THE PROFESSIONAL CIVIL ENGINEER TO CORRECT ANY ERROR, OMISSION, OR VARIATION FROM THE ABOVE REQUIREMENTS FOUND IN THESE PLANS. ALL CORRECTIONS WILL BE AT NO ADDITIONAL COST OR LIABILITY TO THE COB. ALL DETAILS FOR STRUCTURAL WALLS, ROCKERIES OVER FOUR FEET IN HEIGHT, GEOGRID REINFORCED ROCKERIES, AND GEOGRID REINFORCED MODULAR BLOCK WALLS MUST BE STAMPED BY A PROFESSIONAL ENGINEER.

- A COPY OF THE APPROVED PLANS MUST BE ON-SITE DURING CONSTRUCTION. THE APPLICANT IS RESPONSIBLE FOR OBTAINING ANY OTHER REQUIRED OR RELATED PERMITS PRIOR TO BEGINNING CONSTRUCTION.

- ALL LOCATIONS OF EXISTING UTILITIES HAVE BEEN ESTABLISHED BY FIELD SURVEY OR OBTAINED FROM AVAILABLE RECORDS AND SHOULD, THEREFORE, BE CONSIDERED ONLY APPROXIMATE AND NOT NECESSARILY COMPLETE. IT IS THE SOLE RESPONSIBILITY OF THE CONTRACTOR TO INDEPENDENTLY VERIFY THE ACCURACY OF ALL UTILITY LOCATIONS AND TO DISCOVER AND AVOID ANY OTHER UTILITIES NOT SHOWN WHICH MAY BE AFFECTED BY THE IMPLEMENTATION OF THIS PLAN.

- THE AREA TO BE CLEARED AND GRADED MUST FLAGGED BY THE CONTRACTOR AND APPROVED BY THE CLEARING & GRADING INSPECTOR PRIOR TO BEGINNING ANY WORK ON THE SITE.

- A REINFORCED SILT FENCE MUST BE INSTALLED IN ACCORDANCE WITH COB EC-5 AND LOCATED AS SHOWN ON THE APPROVED PLANS OR PER THE CLEARING & GRADING INSPECTOR, ALONG SLOPE CONTOURS AND DOWN SLOPE FROM THE BUILDING SITE.

- A HARD-SURFACE CONSTRUCTION ACCESS PAD IS REQUIRED PER CLEARING & GRADING STANDARD DETAIL EC-1 OR EC-2. THIS PAD MUST REMAIN IN PLACE UNTIL PAVING IS INSTALLED.

- CLEARING WILL BE LIMITED TO THE AREAS WITHIN THE APPROVED DISTURBANCE LIMITS. EXPOSED SOILS MUST BE COVERED AT THE END OF EACH WORKING DAY WHEN WORKING FROM OCTOBER 1ST THROUGH APRIL 30TH. FROM MAY 1ST THROUGH SEPTEMBER 30TH, EXPOSED SOILS MUST BE COVERED AT THE END OF EACH CONSTRUCTION WEEK AND ALSO AT THE THREAT OF RAIN.

- ANY EXCAVATED MATERIAL REMOVED FROM THE CONSTRUCTION SITE AND DEPOSITED ON PROPERTY WITHIN THE CITY LIMITS MUST BE DONE IN COMPLIANCE WITH A VALID CLEARING & GRADING PERMIT. LOCATIONS FOR THE MOBILIZATION AREA AND STOCKPILED MATERIAL MUST BE APPROVED BY THE CLEARING & GRADING INSPECTOR AT LEAST 24 HOURS IN ADVANCE OF ANY STOCKPILING.

- TO REDUCE THE POTENTIAL FOR EROSION OF EXPOSED SOILS, OR WHEN RAINY SEASON CONSTRUCTION IS PERMITTED, THE FOLLOWING BEST MANAGEMENT PRACTICES (BMPS) ARE REQUIRED:

PRESERVE NATURAL VEGETATION FOR AS LONG AS POSSIBLE OR AS REQUIRED BY THE CLEARING & GRADING INSPECTOR.

PROTECT EXPOSED SOIL USING PLASTIC (EC-14), EROSION CONTROL BLANKETS, STRAW OR MULCH (COB GUIDE TO MULCH MATERIALS, RATES, AND USE CHART), OR AS DIRECTED BY THE CLEARING & GRADING INSPECTOR.

INSTALL CATCH BASIN INSERTS AS REQUIRED BY THE CLEARING & GRADING INSPECTOR OR PERMIT CONDITIONS OF APPROVAL.

INSTALL A TEMPORARY SEDIMENT POND, A SERIES OF SEDIMENTATION TANKS, TEMPORARY FILTER VAULTS, OR OTHER SEDIMENT CONTROL FACILITIES. INSTALLATION OF EXPOSED AGGREGATE SURFACES REQUIRES A SEPARATE EFFLUENT COLLECTION POND ON-SITE.

0. FINAL SITE GRADING MUST DIRECT DRAINAGE AWAY FROM ALL BUILDING STRUCTURES AT A MINIMUM 2% SLOPE, PER THE UNIFORM BUILDING CODE.

1. THE CONTRACTOR MUST MAINTAIN A SWEEPER ON-SITE DURING EARTHWORK AND IMMEDIATELY REMOVE SOIL THAT HAS BEEN TRACKED ONTO PAVED AREAS AS RESULT OF CONSTRUCTION.

2. A PUBLIC INFORMATION SIGN LISTING 24-HOUR EMERGENCY PHONE NUMBERS FOR THE CITY AND THE CONTRACTOR MAY BE PROVIDED TO THE APPLICANT AT THE TIME THE CLEARING & GRADING PERMIT IS ISSUED. THE APPLICANT MUST POST THE SIGN AT THE PROJECT SITE IN FULL VIEW OF THE PUBLIC AND THE CONTRACTORS, AND IT MUST REMAIN POSTED UNTIL FINAL SIGN-OFF BY THE CLEARING & GRADING INSPECTOR.

3. TURBIDITY MONITORING MAY BE REQUIRED AS A CONDITION OF CLEARING & GRADING PERMIT APPROVAL. IF REQUIRED, TURBIDITY MONITORING MUST BE PERFORMED IN ACCORDANCE WITH THE APPROVED TURBIDITY MONITORING PLAN AND AS DIRECTED BY THE CLEARING & GRADING INSPECTOR. MONITORING MUST CONTINUE DURING SITE (EARTHWORK) CONSTRUCTION UNTIL THE FINAL SIGN-OFF BY THE CLEARING & GRADING INSPECTOR.

4. ANY PROJECT THAT IS SUBJECT TO RAINY SEASON RESTRICTIONS WILL NOT BE ALLOWED TO PERFORM CLEARING & GRADING ACTIVITIES WITHOUT WRITTEN APPROVAL FROM THE PCD DIRECTOR. THE RAINY SEASON EXTENDS FROM NOVEMBER 1ST THROUGH APRIL 30TH, AS DEFINED IN SECTION 23.76.093A OF THE CLEARING & GRADING CODE.

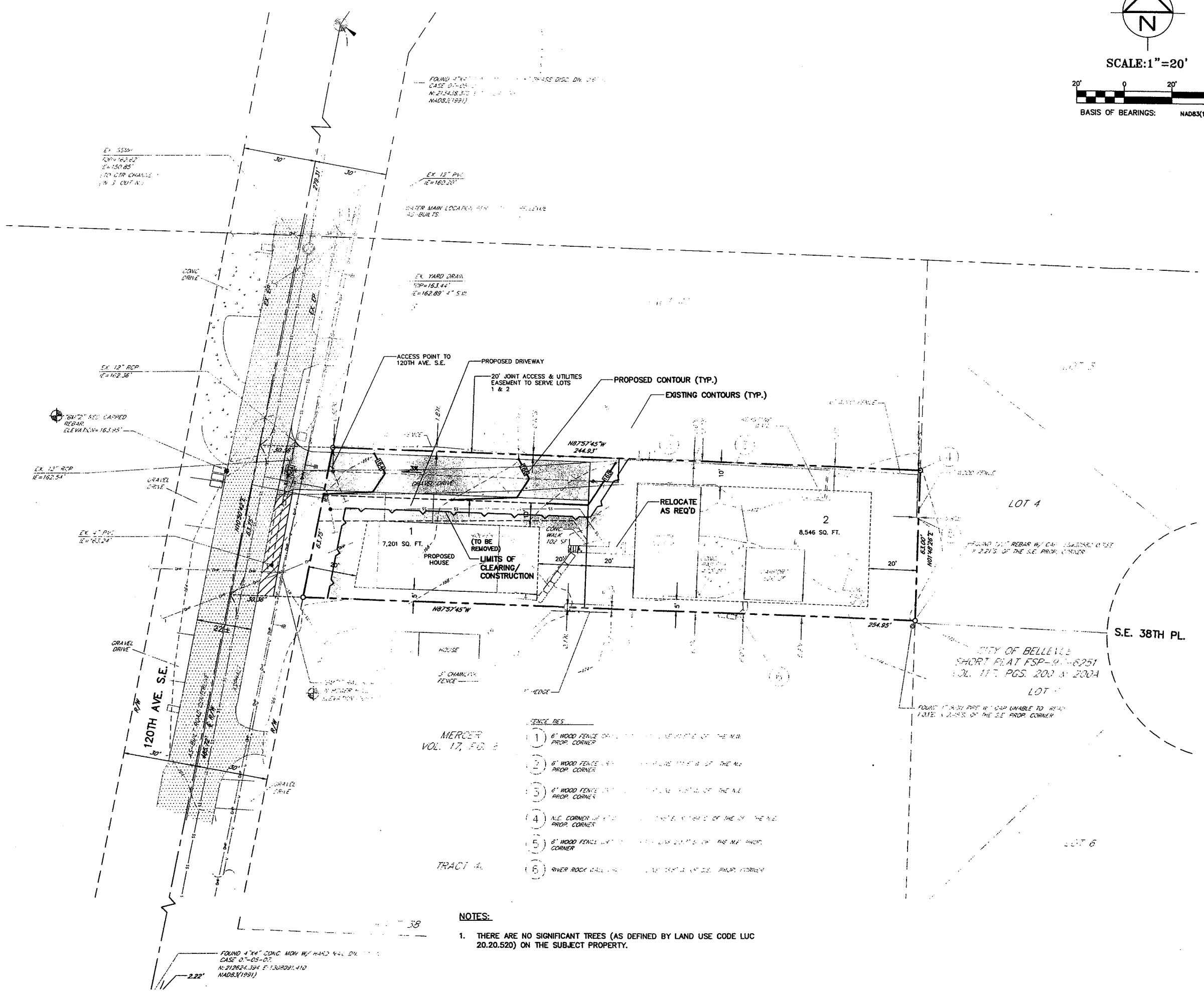

NOTES:

1. THERE ARE NO SIGNIFICANT TREES (AS DEFINED BY LAND USE CODE LUC 20.20.520) ON THE SUBJECT PROPERTY.

NO. | REVISION | DATE | BY

GROUP FOUR Inc.
Land Surveying // Civil Engineering
Land Use Planning // Biological Sciences
10030 JUANITA-WOODINVILLE WAY NE BOTHELL, WASHINGTON 98011
(425)775-4581 * (206)363-4244 * FAX(206)363-3919 * www.GRP4.com

VOLWILER
PRELIMINARY SHORT PLAT
PRELIMINARY CLEARING & GRADING PLAN

CITY OF BELLEVUE WASHINGTON

RECEIVED
JUN 17 2008
CITY OF BELLEVUE